Z900
Z900 ABS

Motorcycle
Service Manual

Kawasaki

Quick Reference Guide

General Information	1
Periodic Maintenance	2
Fuel System (DFI)	3
Cooling System	4
Engine Top End	5
Clutch	6
Engine Lubrication System	7
Engine Removal/Installation	8
Crankshaft/Transmission	9
Wheels/Tires	10
Final Drive	11
Brakes	12
Suspension	13
Steering	14
Frame	15
Electrical System	16
Appendix	17

This quick reference guide will assist you in locating a desired topic or procedure.

- Bend the pages back to match the black tab of the desired chapter number with the black tab on the edge at each table of contents page.
- Refer to the sectional table of contents for the exact pages to locate the specific topic required.

Kawasaki

Z900
Z900 ABS

Motorcycle
Service Manual

All rights reserved. No parts of this publication may be reproduced, stored in a retrieval system, or transmitted in any form or by any means, electronic mechanical photocopying, recording or otherwise, without the prior written permission of Quality Assurance Division/Motorcycle & Engine Company/Kawasaki Heavy Industries, Ltd., Japan.

No liability can be accepted for any inaccuracies or omissions in this publication, although every possible care has been taken to make it as complete and accurate as possible.

The right is reserved to make changes at any time without prior notice and without incurring an obligation to make such changes to products manufactured previously. See your Motorcycle dealer for the latest information on product improvements incorporated after this publication.

All information contained in this publication is based on the latest product information available at the time of publication. Illustrations and photographs in this publication are intended for reference use only and may not depict actual model component parts.

© 2016 Kawasaki Heavy Industries, Ltd.

First Edition (0) : Dec. 1, 2016

LIST OF ABBREVIATIONS

A	ampere(s)	IC	integrated circuit
ABDC	after bottom dead center	in.	inch(es)
ABS	anti-lock brake system	km/h	kilometers per hour
AC	alternating current	L	liter(s)
Ah	ampere hour	LCD	liquid crystal display
ATDC	after top dead center	LED	light emitting diode
BBDC	before bottom dead center	lb	pound(s)
BDC	bottom dead center	m	meter(s)
BTDC	before top dead center	min	minute(s)
°C	degree(s) Celsius	mmHg	millimeters of mercury
cmHg	centimeters of mercury	mph	miles per hour
CPU	central processing unit	N	newton(s)
cu in.	cubic inch(es)	oz	ounce(s)
DC	direct current	Pa	pascal(s)
DFI	digital fuel injection	PS	horsepower(s)
DOHC	double overhead camshaft	psi	pound(s) per square inch
DOT	department of transportation	qt	quart(s)
ECU	electronic control unit	r	revolution
F	farad(s)	rpm	revolution(s) per minute
°F	degree(s) Fahrenheit	s	second(s)
ft	foot, feet	TDC	top dead center
g	gram(s)	TIR	total indicator reading
gal	gallon(s)	V	volt(s)
h	hour(s)	W	watt(s)
HP	horsepower(s)	Ω	ohm(s)

COUNTRY AND AREA CODES

AT	Austria	EUR	Europe
AU	Australia	ID	Indonesia
CA	Canada	MY	Malaysia
CAL	California	SEA-B1	Southeast Asia B1
CH	Switzerland	TH	Thailand
CN	China	US	United States
DE	Germany	WVTA (FULL)	WVTA Model (Full Power)

EMISSION CONTROL INFORMATION

To protect the environment in which we all live, Kawasaki has incorporated crankcase emission (1) and exhaust emission (2) control systems in compliance with applicable regulations of the United States Environmental Protection Agency and California Air Resources Board. Additionally, Kawasaki has incorporated an evaporative emission control system (3) in compliance with applicable regulations of the California Air Resources Board on vehicles sold in California only.

1. Crankcase Emission Control System

This system eliminates the release of crankcase vapors into the atmosphere. Instead, the vapors are routed through an oil separator to the intake side of the engine. While the engine is operating, the vapors are drawn into combustion chamber, where they are burned along with the fuel and air supplied by the fuel injection system.

2. Exhaust Emission Control System

This system reduces the amount of pollutants discharged into the atmosphere by the exhaust of this motorcycle. The fuel, ignition, and exhaust systems of this motorcycle have been carefully designed and constructed to ensure an efficient engine with low exhaust pollutant levels.

The exhaust system of this model motorcycle manufactured primarily for sale in California includes a catalytic converter system.

3. Evaporative Emission Control System

Vapors caused by fuel evaporation in the fuel system are not vented into the atmosphere. Instead, fuel vapors are routed into the running engine to be burned, or stored in a canister when the engine is stopped.

The Clean Air Act, which is the Federal law covering motor vehicle pollution, contains what is commonly referred to as the Act's "tampering provisions."

"Sec. 203(a) The following acts and the causing thereof are prohibited.

(3)(A) for any person to remove or render inoperative any device or element of design installed on or in a motor vehicle or motor vehicle engine in compliance with regulations under this title prior to its sale and delivery to the ultimate purchaser, or for any manufacturer or dealer knowingly to remove or render inoperative any such device or element of design after such sale and delivery to the ultimate purchaser.

(3)(B) for any person engaged in the business of repairing, servicing, selling, leasing, or trading motor vehicles or motor vehicle engines, or who operates a fleet of motor vehicles knowingly to remove or render inoperative any device or element of design installed on or in a motor vehicle or motor vehicle engine in compliance with regulations under this title following its sale and delivery to the ultimate purchaser..."

NOTE

○*The phrase "remove or render inoperative any device or element of design" has been generally interpreted as follows.*

1. *Tampering does not include the temporary removal or rendering inoperative of devices or elements of design in order to perform maintenance.*
2. *Tampering could include.*
   a. *Maladjustment of vehicle components such that the emission standards are exceeded.*
   b. *Use of replacement parts or accessories which adversely affect the performance or durability of the motorcycle.*
   c. *Addition of components or accessories that result in the vehicle exceeding the standards.*
   d. *Permanently removing, disconnecting, or rendering inoperative any component or element of design of the emission control systems.*

WE RECOMMEND THAT ALL DEALERS OBSERVE THESE PROVISIONS OF FEDERAL LAW, THE VIOLATION OF WHICH IS PUNISHABLE BY CIVIL PENALTIES NOT EXCEEDING $10 000 PER VIOLATION.

TAMPERING WITH NOISE CONTROL SYSTEM PROHIBITED

Federal law prohibits the following acts or the causing thereof. (1) The removal or rendering inoperative by any person other than for purposes of maintenance, repair, or replacement, of any device or element of design incorporated into any new vehicle for the purpose of noise control prior to its sale or delivery to the ultimate purchaser or while it is in use, or (2) the use of the vehicle after such device or element of design has been removed or rendered inoperative by any person.

Among those acts presumed to constitute tampering are the acts listed below.

- Replacement of the original exhaust system or muffler with a component not in compliance with Federal regulations.
- Removal of the muffler(s) or any internal portion of the muffler(s).
- Removal of the air box or air box cover.
- Modifications to the muffler(s) or air intake system by cutting, drilling, or other means if such modifications result in increased noise levels.

Foreword

This manual is designed primarily for use by trained mechanics in a properly equipped shop. However, it contains enough detail and basic information to make it useful to the owner who desires to perform his own basic maintenance and repair work. A basic knowledge of mechanics, the proper use of tools, and workshop procedures must be understood in order to carry out maintenance and repair satisfactorily. Whenever the owner has insufficient experience or doubts his ability to do the work, all adjustments, maintenance, and repair should be carried out only by qualified mechanics.

In order to perform the work efficiently and to avoid costly mistakes, read the text, thoroughly familiarize yourself with the procedures before starting work, and then do the work carefully in a clean area. Whenever special tools or equipment are specified, do not use makeshift tools or equipment. Precision measurements can only be made if the proper instruments are used, and the use of substitute tools may adversely affect safe operation.

For the duration of the warranty period, we recommend that all repairs and scheduled maintenance be performed in accordance with this service manual. Any owner maintenance or repair procedure not performed in accordance with this manual may void the warranty.

To get the longest life out of your vehicle.

- Follow the Periodic Maintenance Chart in the Service Manual.
- Be alert for problems and non-scheduled maintenance.
- Use proper tools and genuine Kawasaki Motorcycle parts. Special tools, gauges, and testers that are necessary when servicing Kawasaki motorcycles are introduced by the Service Manual. Genuine parts provided as spare parts are listed in the Parts Catalog.
- Follow the procedures in this manual carefully. Don't take shortcuts.
- Remember to keep complete records of maintenance and repair with dates and any new parts installed.

How to Use This Manual

In this manual, the product is divided into its major systems and these systems make up the manual's chapters. The Quick Reference Guide shows you all of the product's system and assists in locating their chapters. Each chapter in turn has its own comprehensive Table of Contents.

For example, if you want stick coil information, use the Quick Reference Guide to locate the Electrical System chapter. Then, use the Table of Contents on the first page of the chapter to find the Stick Coil section.

Whenever you see symbols, heed their instructions! Always follow safe operating and maintenance practices.

⚠ DANGER

DANGER indicates a hazardous situation which, if not avoided, will result in death or serious injury.

⚠ WARNING

WARNING indicates a hazardous situation which, if not avoided, could result in death or serious injury.

NOTICE

NOTICE is used to address practices not related to personal injury.

This manual contains four more symbols which will help you distinguish different types of information.

NOTE

○*NOTE indicates information that may help or guide you in the operation or service of the vehicle.*

- Indicates a procedural step or work to be done.

○Indicates a procedural sub-step or how to do the work of the procedural step it follows. It also precedes the text of a NOTE.

★Indicates a conditional step or what action to take based on the results of the test or inspection in the procedural step or sub-step it follows.

In most chapters an exploded view illustration of the system components follows the Table of Contents. In these illustrations you will find the instructions indicating which parts require specified tightening torque, oil, grease or a locking agent during assembly.

General Information

Table of Contents

Before Servicing 1-2
Model Identification..... 1-7
General Specifications..... 1-9
Unit Conversion Table 1-12

Before Servicing

Before starting to perform an inspection service or carry out a disassembly and reassembly operation on a motorcycle, read the precautions given below. To facilitate actual operations, notes, illustrations, photographs, cautions, and detailed descriptions have been included in each chapter wherever necessary. This section explains the items that require particular attention during the removal and reinstallation or disassembly and reassembly of general parts.

Especially note the following.

Battery Ground

Before completing any service on the motorcycle, disconnect the battery cables from the battery to prevent the engine from accidentally turning over. Disconnect the ground cable (–) first and then the positive (+). When completed with the service, first connect the positive (+) cable to the positive (+) terminal of the battery then the negative (–) cable to the negative terminal.

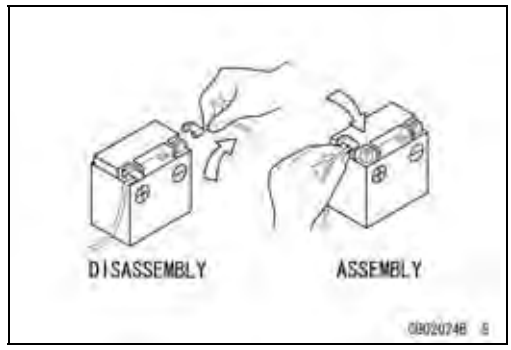

Edges of Parts

Lift large or heavy parts wearing gloves to prevent injury from possible sharp edges on the parts.

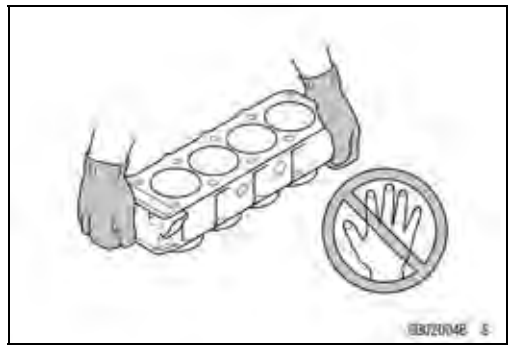

Solvent

Use a high flash-point solvent when cleaning parts. High flash-point solvent should be used according to directions of the solvent manufacturer.

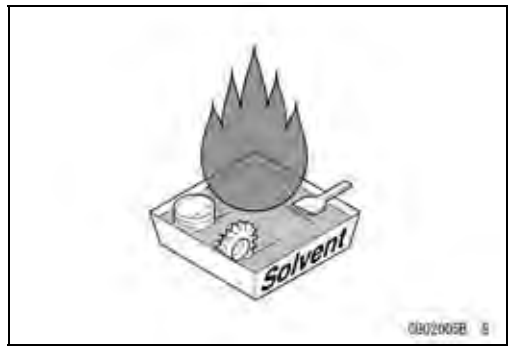

Cleaning Vehicle before Disassembly

Clean the vehicle thoroughly before disassembly. Dirt or other foreign materials entering into sealed areas during vehicle disassembly can cause excessive wear and decrease performance of the vehicle.

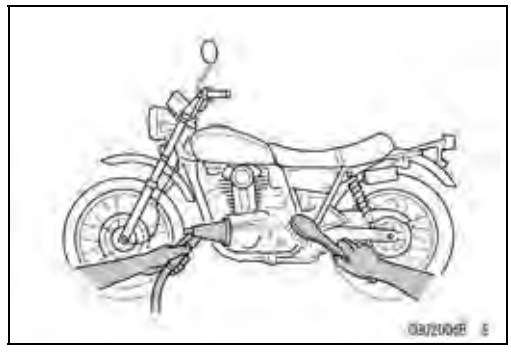

Before Servicing

Arrangement and Cleaning of Removed Parts

Disassembled parts are easy to confuse. Arrange the parts according to the order the parts were disassembled and clean the parts in order prior to assembly.

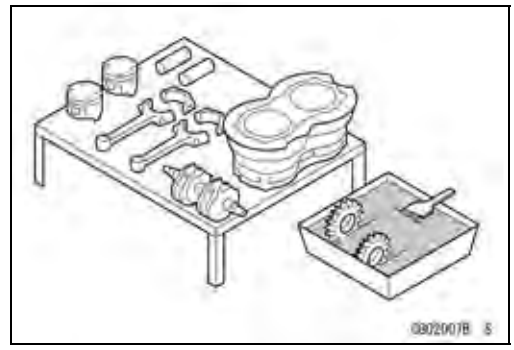

Storage of Removed Parts

After all the parts including subassembly parts have been cleaned, store the parts in a clean area. Put a clean cloth or plastic sheet over the parts to protect from any foreign materials that may collect before re-assembly.

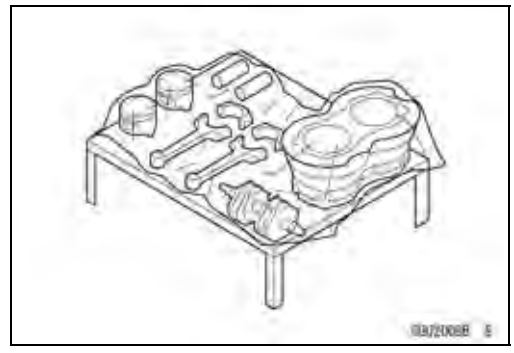

Inspection

Reuse of worn or damaged parts may lead to serious accident. Visually inspect removed parts for corrosion, discoloration, or other damage. Refer to the appropriate sections of this manual for service limits on individual parts. Replace the parts if any damage has been found or if the part is beyond its service limit.

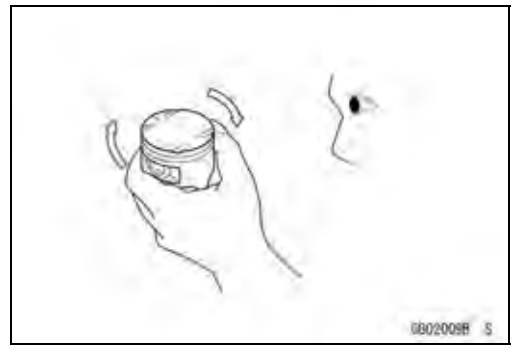

Replacement Parts

Replacement parts must be KAWASAKI genuine or recommended by KAWASAKI. Gaskets, O-rings, oil seals, grease seals, circlips, cotter pins or self-locking nuts must be replaced with new ones whenever disassembled.

Assembly Order

In most cases assembly order is the reverse of disassembly, however, if assembly order is provided in this Service Manual, follow the procedures given.

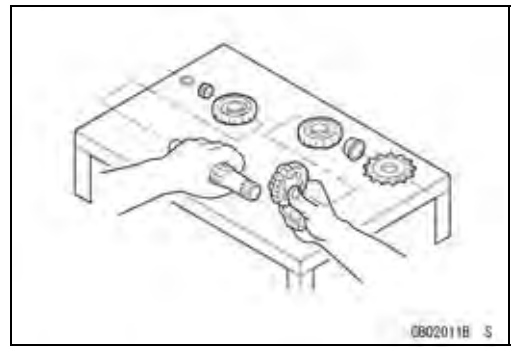

Before Servicing

Tightening Sequence

Generally, when installing a part with several bolts, nuts, or screws, start them all in their holes and tighten them to a snug fit. Then tighten them according to the specified sequence to prevent case warpage or deformation which can lead to malfunction. Conversely when loosening the bolts, nuts, or screws, first loosen all of them by about a quarter turn and then remove them. If the specified tightening sequence is not indicated, tighten the fasteners alternating diagonally.

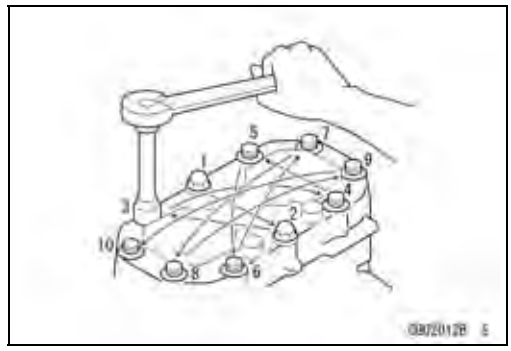

Tightening Torque

Incorrect torque applied to a bolt, nut, or screw may lead to serious damage. Tighten fasteners to the specified torque using a good quality torque wrench.

All of the tightening torque values are for use with dry, solvent - cleaned threads unless otherwise indicated. If a fastener which should have dry, clean threads gets contaminated with lubricant, etc., applying even the specified torque could damage it.

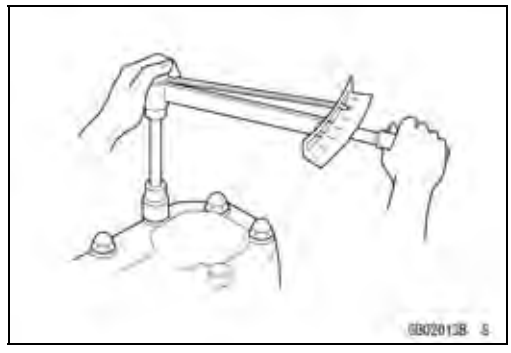

Force

Use common sense during disassembly and assembly, excessive force can cause expensive or hard to repair damage. When necessary, remove screws that have a non -permanent locking agent applied using an impact driver. Use a plastic-faced mallet whenever tapping is necessary.

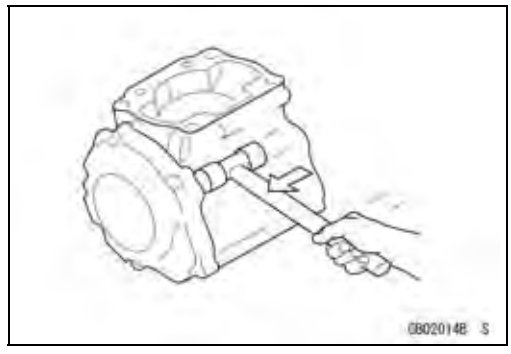

Gasket, O-ring

Hardening, shrinkage, or damage of both gaskets and O-rings after disassembly can reduce sealing performance. Remove old gaskets and clean the sealing surfaces thoroughly so that no gasket material or other material remains. Install the new gaskets and replace the used O-rings when re-assembling.

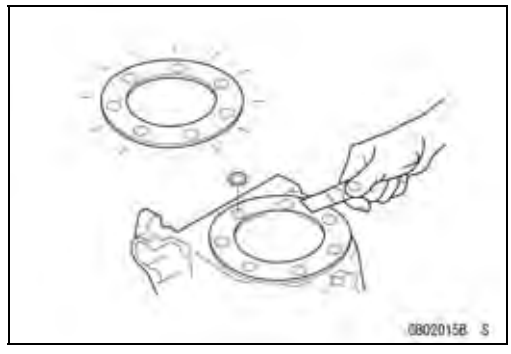

Liquid Gasket, Non-permanent Locking Agent

For applications that require Liquid Gasket or a Non-permanent Locking Agent, clean the surfaces so that no oil residue remains before applying liquid gasket or non-permanent locking agent. Do not apply them excessively. Excessive application can clog oil passages and cause serious damage.

Before Servicing

Press

For items such as bearings or oil seals that must be pressed into place, apply small amount of oil to the contact area. Be sure to maintain proper alignment and use smooth movements when installing.

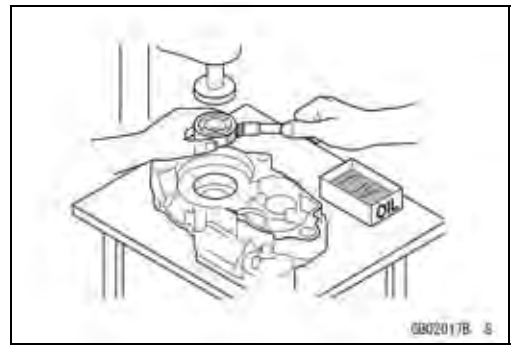

Ball Bearing and Needle Bearing

Do not remove pressed ball or needle unless removal is absolutely necessary. Replace with new ones whenever removed. Press bearings with the manufacturer and size marks facing out. Press the bearing into place by putting pressure on the correct bearing race as shown.

Pressing the incorrect race can cause pressure between the inner and outer race and result in bearing damage.

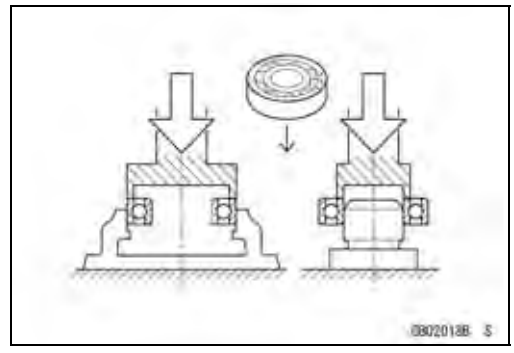

Oil Seal, Grease Seal

Do not remove pressed oil or grease seals unless removal is necessary. Replace with new ones whenever removed. Press new oil seals with manufacture and size marks facing out. Make sure the seal is aligned properly when installing.

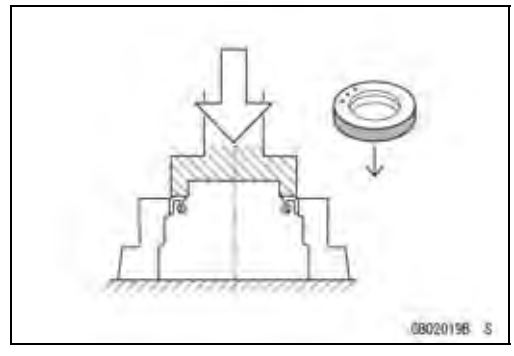

Apply specified grease to the lip of seal before installing the seal.

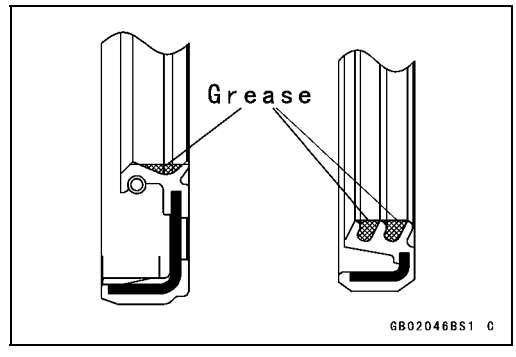

Circlips, Cotter Pins

Replace the circlips or cotter pins that were removed with new ones. Take care not to open the clip excessively when installing to prevent deformation.

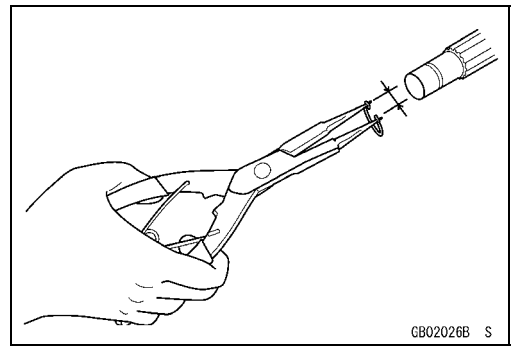

Before Servicing

Lubrication

It is important to lubricate rotating or sliding parts during assembly to minimize wear during initial operation. Lubrication points are called out throughout this manual, apply the specific oil or grease as specified.

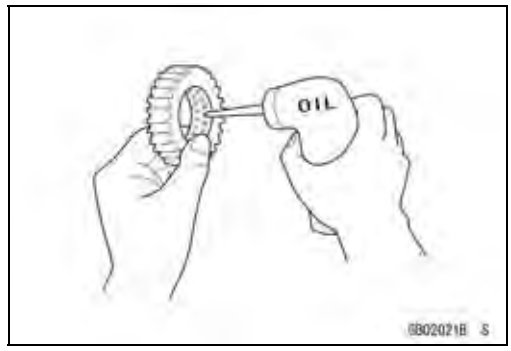

Direction of Engine Rotation

When rotating the crankshaft by hand, the free play amount of rotating direction will affect the adjustment. Rotate the crankshaft to positive direction (clockwise viewed from output side).

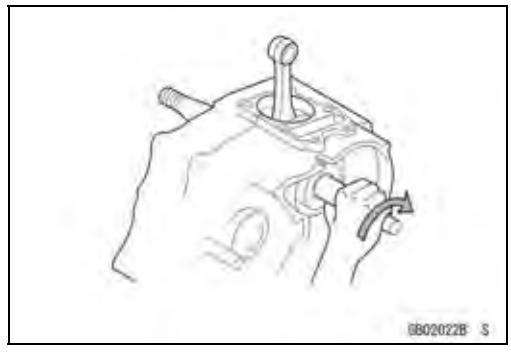

Electrical Wires

A two-color wire is identified first by the primary color and then the stripe color. Unless instructed otherwise, electrical wires must be connected to those of the same color.

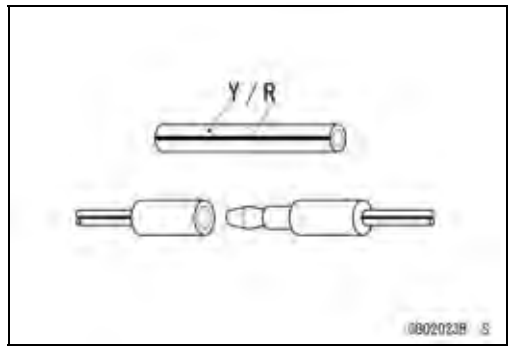

Instrument

Use a meter that has enough accuracy for an accurate measurement. Read the manufacture's instructions thoroughly before using the meter. Incorrect values may lead to improper adjustments.

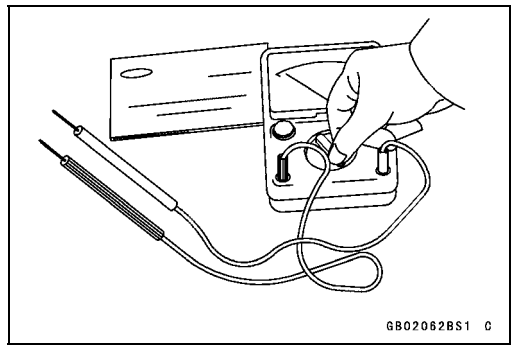

Handling Electronic Parts

Severe impacts to electronic parts such as the ECU, sensor, and relay can damage them. If dropped on a hard surface, replace such parts with new ones.

If a high voltage that is created by static electricity is applied to the electric parts, it could cause them to fail. To avoid this, touch a non-painted metal surface to discharge any static electricity that is accumulated on your body before inspecting or replacing electric parts.

Be careful not to touch the electrical terminals of the electronic parts. The static electricity discharged from your body could damage them or deform the electrical terminals.

Model Identification

ZR900AH/BH Left Side View

ZR900AH/BH Right Side View

Model Identification

ZR900BH (Special Edition Models) Left Side View

ZR900BH (Special Edition Models) Right Side View

Frame Number

Engine Number

General Specifications

Items	ZR900AH/BH
Dimensions	
Overall Length:	2 065 mm (81.30 in.)
	(CN, ID, MY, TH, MY*, TH*) 2 115 mm (83.27 in.)
Overall Width	825 mm (32.5 in.)
Overall Height:	1 065 mm (41.93 in.)
	(MY*, TH*) 1 140 mm (44.88 in.)
Wheelbase	1 450 mm (57.09 in.)
Road Clearance	130 mm (5.12 in.)
Seat Height	795 mm (31.3 in.)
Curb Mass:	
ZR900A:	208 kg (459 lb)
Front	108 kg (238 lb)
Rear	100 kg (221 lb)
ZR900B:	210 kg (463 lb)
	(MY*, TH*) 213 kg (470 lb)
Front	109 kg (240 lb)
	(MY*, TH*) 111 kg (245 lb)
Rear	101 kg (223 lb)
	(MY*, TH*) 102 kg (225 lb)
Fuel Tank Capacity	17 L (4.5 US gal)
Performance	
Minimum Turning Radius	2.4 m (7.9 ft.)
Engine	
Type	4-stroke, DOHC, 4-cylinder
Cooling System	Liquid-cooled
Bore and Stroke	73.4 × 56.0 mm (2.89 × 2.20 in.)
Displacement	948 cm^3 (57.8 cu in.)
Compression Ratio	11.8:1
Maximum Horsepower	92.2 kW (125 PS) @9 500 r/min (rpm) (AU) 92 kW (125 PS) @9 500 r/min (rpm) (CN) 86.3 kW (117 PS) @9 500 r/min (rpm) (US, CA, CAL) – – –
Maximum Torque	98.6 N·m (10.1 kgf·m, 73 ft·lb) @7 700 r/min (rpm) (AU) 99 N·m (10.1 kgf·m, 73 ft·lb) @7 700 r/min (rpm) (CN) 95.0 kW (9.7 kgf·m, 70 ft·lb) @7 700 r/min (rpm) (ID) 98.6 N·m (10.1 kgf·m, 73 ft·lb) @7 500 r/min (rpm) (US, CA, CAL) – – –
Fuel System	FI (Fuel injection), MIKUNI 36EIDW × 4
Fuel Type:	
Minimum Octane Rating:	
Research Octane Number (RON)	95
Antiknock Index (RON + MON) / 2	90
Starting System	Electric Starter

General Specifications

Items	ZR900AH/BH
Ignition System	Battery and coil (transistorized)
Timing Advance	Electronically advanced (IC igniter in ECU)
Ignition Timing	10° BTDC @1 100 r/min (rpm) ~ 46.9° BTDC @9 200 r/min (rpm)
Spark Plug	NGK CR9EIA-9
Cylinder Numbering Method	Left to right,1-2-3-4
Firing Order	1-2-4-3
Valve Timing:	
Intake:	
Open	25° BTDC
Close	65° ABDC
Duration	270°
Exhaust:	
Open	58° BBDC
Close	18° ATDC
Duration	256°
Lubrication System	Forced lubrication (wet sump)
Engine Oil:	
Type	API SG, SH, SJ, SL or SM with JASO MA, MA1 or MA2
Viscosity	SAE 10W-40
Capacity	4.0 L (4.2 US qt)
Drive Train	
Primary Reduction System:	
Type	Gear
Reduction Ratio	1.627 (83/51)
Clutch Type	Wet multi disc
Transmission:	
Type	6-speed, constant mesh, return shift
Gear Ratios:	
1st	2.692 (35/13)
2nd	2.059 (35/17)
3rd	1.650 (33/20)
4th	1.409 (31/22)
5th	1.222 (33/27)
6th	1.034 (30/29)
Final Drive System:	
Type	Chain drive
Reduction Ratio	2.933 (44/15)
Overall Drive Ratio	4.938 @Top gear
Frame	
Type	Tubular, diamond
Caster (Rake Angle)	24.5°
Trail	103 mm (4.06 in.)

General Specifications

Items	ZR900AH/BH
Front Tire:	
Type	Tubeless
Size	120/70ZR17 M/C (58W)
Rim Size	J17M/C × MT3.50
Rear Tire:	
Type	Tubeless
Size	180/55ZR17 M/C (73W)
Rim Size	J17M/C × MT5.50
Front Suspension:	
Type	Telescopic fork (upside-down)
Wheel Travel	120 mm (4.72 in.)
Rear Suspension:	
Type	Swingarm (horizontal back-link)
Wheel Travel	140 mm (5.51 in.)
Brake Type:	
Front	Dual discs
Rear	Single disc
Electrical Equipment	
Battery	12 V 8 Ah (10 HR)
Headlight:	
High Beam	12V 55 W × 2
Low Beam	12V 55 W
Brake/Tail Light	LED
Alternator:	
Type	Three-phase AC
Maximum Output	14.0 V - 23.5 A @4 000 r/min (rpm)

*: Special Edition Models
Specifications are subject to change without notice, and may not apply to every country.

Unit Conversion Table

Prefixes for Units:

Prefix	Symbol	Power
mega	M	× 1 000 000
kilo	k	× 1 000
centi	c	× 0.01
milli	m	× 0.001
micro	μ	× 0.000001

Units of Mass:

kg	×	2.205	=	lb
g	×	0.03527	=	oz

Units of Volume:

L	×	0.2642	=	gal (US)
L	×	0.2200	=	gal (IMP)
L	×	1.057	=	qt (US)
L	×	0.8799	=	qt (IMP)
L	×	2.113	=	pint (US)
L	×	1.816	=	pint (IMP)
mL	×	0.03381	=	oz (US)
mL	×	0.02816	=	oz (IMP)
mL	×	0.06102	=	cu in.

Units of Force:

N	×	0.1020	=	kg
N	×	0.2248	=	lb
kg	×	9.807	=	N
kg	×	2.205	=	lb

Units of Length:

km	×	0.6214	=	mile
m	×	3.281	=	ft
mm	×	0.03937	=	in.

Units of Torque:

N·m	×	0.1020	=	kgf·m
N·m	×	0.7376	=	ft·lb
N·m	×	8.851	=	in·lb
kgf·m	×	9.807	=	N·m
kgf·m	×	7.233	=	ft·lb
kgf·m	×	86.80	=	in·lb

Units of Pressure:

kPa	×	0.01020	=	kgf/cm²
kPa	×	0.1450	=	psi
kPa	×	0.7501	=	cmHg
kgf/cm²	×	98.07	=	kPa
kgf/cm²	×	14.22	=	psi
cmHg	×	1.333	=	kPa

Units of Speed:

km/h	×	0.6214	=	mph

Units of Power:

kW	×	1.360	=	PS
kW	×	1.341	=	HP
PS	×	0.7355	=	kW
PS	×	0.9863	=	HP

Units of Temperature:

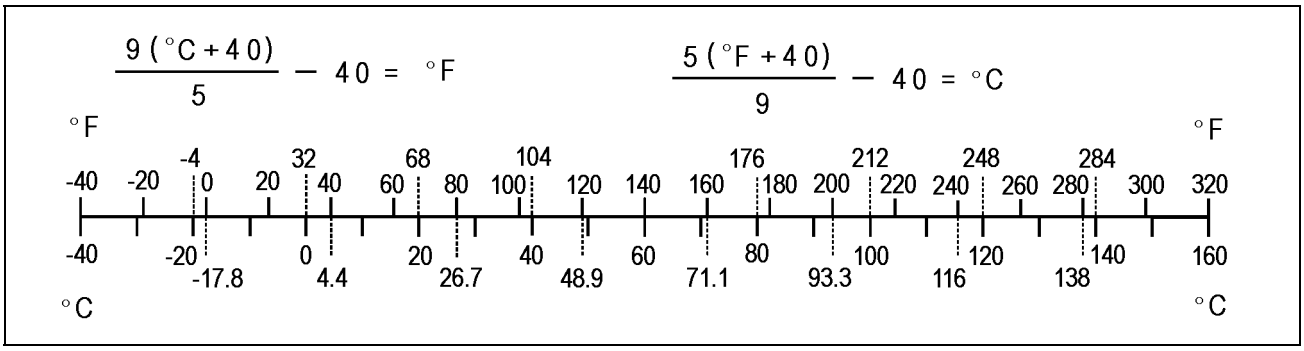

Periodic Maintenance

Table of Contents

Periodic Maintenance Chart 2-3
Torque and Locking Agent 2-5
Specifications 2-11
Special Tools 2-13
Periodic Maintenance Procedures 2-14
Fuel System (DFI) 2-14
Air Cleaner Element Replacement 2-14
Idle Speed Inspection 2-15
Idle Speed Adjustment 2-15
Throttle Control System Inspection 2-15
Engine Vacuum Synchronization Inspection 2-16
Fuel System Inspection 2-19
Fuel Filter Replacement 2-20
Fuel Hose Replacement 2-22
Evaporative Emission Control System Inspection (Equipped Models) 2-24
Cooling System 2-25
Coolant Level Inspection 2-25
Cooling System Inspection 2-25
Coolant Change 2-25
Water Hose and O-ring Replacement 2-28
Engine Top End 2-29
Valve Clearance Inspection 2-29
Valve Clearance Adjustment 2-30
Air Suction System Damage Inspection 2-34
Clutch 2-35
Clutch Operation Inspection 2-35
Engine Lubrication System 2-36
Engine Oil Change 2-36
Oil Filter Replacement 2-37
Wheels/Tires 2-38
Air Pressure Inspection 2-38
Wheels and Tires Inspection 2-38
Wheel Bearing Damage Inspection 2-39
Final Drive 2-40
Drive Chain Lubrication Condition Inspection 2-40
Drive Chain Slack Inspection 2-40
Drive Chain Slack Adjustment 2-41
Wheel Alignment Inspection 2-42
Drive Chain Wear Inspection 2-42
Chain Guide Wear Inspection 2-43
Brakes 2-44
Brake System Inspection 2-44
Brake Operation Inspection 2-45
Brake Fluid Level Inspection 2-45
Brake Fluid Change 2-46
Brake Hose and Pipe Replacement 2-48
Master Cylinder Rubber Parts Replacement 2-52
Caliper Rubber Parts Replacement 2-53
Brake Pad Wear Inspection 2-57
Brake Light Switch Operation Inspection 2-57

Suspension 2-58
Suspension System Inspection 2-58
Steering 2-60
Steering Play Inspection 2-60
Steering Play Adjustment 2-60
Steering Stem Bearing Lubrication 2-62
Electrical System 2-63
Lights and Switches Operation Inspection 2-63
Headlight Aiming Inspection 2-65
Side Stand Switch Operation Inspection 2-66
Engine Stop Switch Operation Inspection 2-67
Spark Plug Replacement 2-68
Others 2-68
Chassis Parts Lubrication 2-68
Condition of Bolts, Nuts and Fasteners Tightness Inspection 2-69

Periodic Maintenance Chart

The scheduled maintenance must be done in accordance with this chart to keep the motorcycle in good running condition.**The initial maintenance is vitally important and must not be neglected.**

Periodic Inspection

*A: Service at number of years shown or indicated odometer reading intervals, whichever comes first.
*B: For higher odometer readings, repeat at the frequency interval established here.
*C: Service more frequently when operating in severe conditions: dusty, wet, muddy, high speed, or frequent starting/stopping.
○: Emission Related Item

Q: Inspection
: Change or Replace
: Lubrication

	Items	year (*A)	Odometer Reading (*B) × 1 000 km (× 1 000 mile) 1 (0.6)	6 (3.8)	12 (7.6)	18 (11.4)	24 (15.2)	See Page
Fuel System								
○	Air cleaner element (*C)							2-14
○	Idle speed		Q		Q		Q	2-15
○	Throttle control system (play, smooth return, no drag)	Q:1	Q		Q		Q	2-15
○	Engine vacuum synchronization				Q		Q	2-16
	Fuel system	Q:1	Q		Q		Q	2-19
	Fuel filter							2-20
	Fuel hose	:5						2-22
○	Evaporative emission control system (Equipped Models)		Q	Q	Q	Q	Q	2-24
Cooling System								
	Coolant level		Q		Q		Q	2-25
	Cooling system	Q:1	Q		Q		Q	2-25
	Coolant, water hose and O-ring	:3	: every 36 000 km (22 500 mile)					2-25, 2-28
Engine Top End								
○	Valve clearance (US and CA Models)						Q	2-29
	Valve clearance (Other than US and CA Models)		Q: every 42 000 km (26 250 mile)					2-29
○	Air suction system				Q		Q	2-34
Clutch								
	Clutch operation (play, engagement, disengagement)		Q		Q		Q	2-35
Engine Lubrication System								
	Engine oil (*C) and Oil filter	:1						2-36, 2-37
Wheels and Tires								
	Tire air pressure	Q:1			Q		Q	2-38

Periodic Maintenance Chart

	Items	year (*A)	Odometer Reading (*B) × 1 000 km (× 1 000 mile) 1 (0.6)	6 (3.8)	12 (7.6)	18 (11.4)	24 (15.2)	See Page
	Wheel and tire	Q:1			Q		Q	2-38
	Wheel bearing damage	Q:1			Q		Q	2-39
Final Drive								
	Drive chain lubrication condition (*C)		Q: every 600 km (400 mile)					2-40
	Drive chain slack (*C)		Q: every 1 000 km (600 mile)					2-41
	Drive chain wear (*C)				Q		Q	2-42
	Drive chain guide wear				Q		Q	2-43
Brakes								
	Brake system	Q:1	Q		Q		Q	2-44
	Brake operation (effectiveness, play, no drag)	Q:1	Q		Q		Q	2-45
	Brake fluid level	Q:1	Q		Q		Q	2-45
	Brake fluid (front and rear)	:2						2-46
	Brake hose	:4						2-48
	Rubber parts of brake master cylinder and caliper	:4	: every 48 000 km (30 000 mile)					2-52, 2-53
	Brake pad wear (*C)			Q	Q	Q	Q	2-57
	Brake light switch operation		Q	Q	Q	Q	Q	2-57
Suspension								
	Suspension system	Q:1			Q		Q	2-58
Steering								
	Steering play	Q:1	Q		Q		Q	2-60
	Steering stem bearing	:2						2-62
Electrical System								
	Electrical system	Q:1			Q		Q	2-63
○	Spark plug							2-68
Others								
	Chassis parts	:1						2-68
	Condition of bolts, nuts and fasteners		Q		Q		Q	2-69

Torque and Locking Agent

The following tables list the tightening torque for the major fasteners requiring use of a non-permanent locking agent or silicone sealant etc. All of the values are for use with dry solvent - cleaned threads unless otherwise indicated.

Letters used in the “Remarks” column mean:
AL: Tighten the two clamp bolts alternately two times to ensure even tightening torque.
EO: Apply engine oil.
G: Apply grease.
L: Apply a non-permanent locking agent.
LG: Apply liquid gasket.
Lh: Left-hand Threads
MO: Apply molybdenum disulfide oil solution.
(mixture of the engine oil and molybdenum disulfide grease in a weight ratio 10:1)
R: Replacement Parts
S: Follow the specified tightening sequence.
Si: Apply silicone grease.

Fastener	Torque			Remarks
	N·m	kgf·m	ft·lb	
Fuel System (DFI)				
Switch Housing Screws	3.5	0.36	31 in·lb	
Air Cleaner Housing Assembly Screws	1.1	0.11	10 in·lb	
Delivery Pipe Assy Mounting Screws	3.5	0.36	31 in·lb	
Air Cleaner Housing Clamp Bolts	2.0	0.20	18 in·lb	
Bracket Bolts	11	1.1	97 in·lb	
Vehicle-down Sensor Mounting Bolts	5.9	0.60	52 in·lb	
Spark Plugs	13	1.3	115 in·lb	
Water Temperature Sensor	12	1.2	106 in·lb	
Intake Air Temperature Sensor Screw	1.2	0.12	11 in·lb	
Gear Position Sensor Bolt	10	1.0	89 in·lb	L
Oxygen Sensor	44	4.5	32	
Crankshaft Sensor Bolts	6.0	0.61	53 in·lb	
Fuel Pump Assembly Screws	0.98	0.10	8.7 in·lb	R
Fuel Pump Bolts	9.8	1.0	87 in·lb	L, S
Purge Valve Bracket Bolts (Equipped Models)	1.1	0.11	10 in·lb	
Purge Valve Mounting Nut (Equipped Models)	6.9	0.70	61 in·lb	
Canister Holder Bolts (Equipped Models)	1.1	0.11	10 in·lb	
Cooling System				
Radiator Fan Mounting Bolts	8.4	0.86	74 in·lb	
Fitting Bolt	9.0	0.92	80 in·lb	L
Thermostat Housing Bolts	9.8	1.0	87 in·lb	
Thermostat Housing Cover Bolts	5.9	0.60	52 in·lb	
Coolant Drain Bolt (Cylinder)	9.8	1.0	87 in·lb	
Water Temperature Sensor	12	1.2	106 in·lb	
Water Hose Fitting Cover Bolts	5.9	0.60	52 in·lb	L
Oil Passage Cover Bolts (Other than MY Model)	12	1.2	106 in·lb	L
Water Pipe Bolts	12	1.2	106 in·lb	L
Water Pump Cover Bolts	11	1.1	97 in·lb	
Coolant Drain Bolt	11	1.1	97 in·lb	

Torque and Locking Agent

Fastener	Torque			Remarks
	N·m	kgf·m	ft·lb	
Water Pump Impeller Bolt	9.8	1.0	87 in·lb	
Oil Cooler Bolts (MY Model)	12	1.2	106 in·lb	L
Engine Top End				
Air Suction Valve Cover Bolts	9.8	1.0	87 in·lb	L
Spark Plugs	13	1.3	115 in·lb	
Cylinder Head Cover Bolts	10	1.0	89 in·lb	S
Camshaft Cap Bolts	12	1.2	106 in·lb	S
Upper Camshaft Chain Guide Bolts	12	1.2	106 in·lb	S
Cylinder Head Bolts (M10) (First)	30	3.1	22	MO, S
Cylinder Head Bolts (M10) (Final)	54	5.5	40	MO, S
Cylinder Head Jacket Plugs	19.6	2.00	14.5	L
Cylinder Head Bolts (M6)	12	1.2	106 in·lb	S
Throttle Body Assy Holder Bolts	12	1.2	106 in·lb	L, S
Camshaft Chain Tensioner Cap Bolt	20	2.0	15	
Camshaft Chain Tensioner Mounting Bolts	11	1.1	97 in·lb	
Camshaft Sprocket Bolts	15	1.5	11	L
Front Camshaft Chain Guide Bolt (Upper)	25	2.5	18	
Front Camshaft Chain Guide Bolt (Lower)	12	1.2	106 in·lb	
Rear Camshaft Chain Guide Bolt	25	2.5	18	
Oxygen Sensor	44	4.5	32	
Premuffler Chamber Mounting Bolt	34	3.5	25	
Muffler Body Mounting Bolt	34	3.5	25	
Clutch				
Clutch Spring Bolts	8.8	0.90	78 in·lb	
Clutch Hub Nut	135	13.8	100	R
Clutch Lever Clamp Bolts	11	1.1	97 in·lb	S
Oil Filler Plug	Hand -tighten	–	–	
Clutch Cover Plate Bolt	4.0	0.41	35 in·lb	L
Clutch Cover Bolts	12	1.2	106 in·lb	S
Engine Lubrication System				
Oil Passage Cover Bolts	12	1.2	106 in·lb	L
Oil Filler Plug	Hand -tighten	–	–	
Oil Passage Plug	10	1.0	89 in·lb	
Oil Passage Plugs	20	2.0	15	L
Oil Pressure Switch	15	1.5	11	LG
Oil Pressure Switch Terminal Bolt	2.0	0.20	18 in·lb	G
Oil Pressure Relief Valve	15	1.5	11	L
Oil Filter	17	1.7	13	G, R
Oil Filter Pipe	25	2.5	18	L
Engine Oil Drain Bolt	29	3.0	21	
Lower Fairing Bracket Bolts, L = 16 mm (0.63 in.)	12	1.2	106 in·lb	

Torque and Locking Agent

Fastener	Torque			Remarks
	N·m	kgf·m	ft·lb	
Oil Pan Bolts	12	1.2	106 in·lb	S
Lower Fairing Bracket Bolts, L = 12 mm (0.47 in.)	6.9	0.70	61 in·lb	
Lower Fairing Bracket Bolts, L = 14 mm (0.55 in.)	9.8	1.0	87 in·lb	
Oil Cooler Bolts	12	1.2	106 in·lb	L
Engine Removal/Installation				
Upper Front Engine Bracket Bolts	29	3.0	21	S
Upper Front Engine Mounting Bolts	59	6.0	44	S
Upper Rear Engine Bracket Bolts	25	2.5	18	S
Upper Rear Engine Mounting Bolts	44	4.5	32	S
Middle Front Engine Mounting Bolts	44	4.5	32	S
Middle Engine Bracket Bolts	25	2.5	18	S
Middle Rear Engine Mounting Nut	44	4.5	32	S
Lower Engine Mounting Nut	44	4.5	32	S
Crankshaft/Transmission				
Balancer Shaft Clamp Bolt	9.8	1.0	87 in·lb	
Balancer Shaft Clamp Lever Bolt	25	2.5	18	L
Connecting Rod Big End Nuts	see the text	←	←	MO
Oil Jet Nozzle Bolt	6.9	0.70	61 in·lb	L
Breather Side Plate Bolt	5.9	0.60	52 in·lb	L
Breather Plate Bolts	9.8	1.0	87 in·lb	L
Starter Motor Clutch Bolts	12	1.2	106 in·lb	L
Oil Passage Plugs	20	2.0	15	L
Oil Passage Plug	10	1.0	89 in·lb	
Crankcase Bolts (M6)	12	1.2	106 in·lb	S
Crankcase Bolts (M7)	20	2.0	15	S
Crankcase Bolts (M8)	27	2.8	20	S
Crankcase Bolts (M9)	44	4.5	32	MO, S
Gear Positioning Lever Bolt	12	1.2	106 in·lb	
Shift Drum Bearing Holder Bolts	12	1.2	106 in·lb	L
Shift Drum Cam Holder Bolt	12	1.2	106 in·lb	L
Shift Shaft Return Spring Pin	39	4.0	29	L
Shift Pedal Mounting Bolt	25	2.5	18	G
Shift Lever Clamp Bolt	9.8	1.0	87 in·lb	L
Gear Position Sensor Bolt	10	1.0	89 in·lb	L
Wheels/Tires				
Front Axle Clamp Bolt	20	2.0	15	
Front Axle	108	11.0	79.7	G
Rear Axle Nut	108	11.0	79.7	
Final Drive				
Engine Sprocket Cover Bolts	9.8	1.0	87 in·lb	
Chain Guide Bolts	9.8	1.0	87 in·lb	L
Engine Sprocket Nut	147	15.0	108	MO

Torque and Locking Agent

Fastener	Torque			Remarks
	N·m	kgf·m	ft·lb	
Rear Sprocket Nuts	59	6.0	44	R, S
Brakes				
Brake Hose Clamp Bolt	6.9	0.70	61 in·lb	
Brake Hose Banjo Bolts	25	2.5	18	
Front Brake Reservoir Cap Screws	1.5	0.15	13 in·lb	
Brake Lever Pivot Bolt	1.0	0.10	8.9 in·lb	Si
Brake Lever Pivot Bolt Locknut	5.9	0.60	52 in·lb	
Front Brake Light Switch Screw	1.2	0.12	11 in·lb	
Front Master Cylinder Clamp Bolts	11	1.1	97 in·lb	S
Front Brake Disc Mounting Bolts	27	2.8	20	L, S
Front Caliper Mounting Bolts	25	2.5	18	
Front Brake Pad Pins	17	1.7	13	
Front Caliper Assembly Bolts	22	2.2	16	L
Bleed Valves	5.4	0.55	48 in·lb	
Rear Caliper Pin Bolt	27	2.8	20	Si
Rear Brake Pad Pin	17	1.7	13	
Rear Caliper Mounting Bolt	22	2.2	16	
Rear Master Cylinder Push Rod Locknut	17	1.7	13	
Brake Pedal Bolt	8.8	0.90	78 in·lb	
Rear Master Cylinder Mounting Bolts	25	2.5	18	
Rear Brake Disc Mounting Bolts	27	2.8	20	L, S
Rear Wheel Rotation Sensor Bolt	6.9	0.70	61 in·lb	
Brake Pipe Banjo Bolts (ABS Equipped Models)	33	3.4	24	
ABS Hydraulic Unit Bracket Bolts (ABS Equipped Models)	8.8	0.90	78 in·lb	
ABS Hydraulic Unit Bolts (ABS Equipped Models)	8.8	0.90	78 in·lb	
Front Wheel Rotation Sensor Rotor Bolts (ABS Equipped Models)	4.15	0.423	37 in·lb	
Front Wheel Rotation Sensor Bolt (ABS Equipped Models)	6.9	0.70	61 in·lb	
Suspension				
Front Fork Top Plugs	22.5	2.29	16.6	
Upper Front Fork Clamp Bolts	20	2.0	15	
Piston Rod Nut	15	1.5	11	
Lower Front Fork Clamp Bolts	20.5	2.09	15.1	AL
Piston Rod Rubber Nut	15	1.5	11	
Front Fork Bottom Allen Bolt	23	2.3	17	L
Upper Rear Shock Absorber Bolt	44	4.5	32	S
Swingarm Pivot Shaft Nut	108	11.0	79.7	
Tie-Rod Nuts	44	4.5	32	R, S
Swingarm Pivot Shaft	9.8	1.0	87 in·lb	
Swingarm Pivot Shaft Locknut	98	10	72	
Rocker Arm Nut	44	4.5	32	R, S
Lower Rear Shock Absorber Nut	44	4.5	32	R, S

Torque and Locking Agent

Fastener	Torque			Remarks
	N·m	kgf·m	ft·lb	
Steering				
Handlebar Holder Bolts	25	2.5	18	S
Switch Housing Screws	3.5	0.36	31 in·lb	
Upper Front Fork Clamp Bolts	20	2.0	15	
Steering Stem Head Bolt	108	11.0	79.7	
Lower Handlebar Holder Nuts	34	3.5	25	R
Steering Stem Nut	27	2.8	20	
Lower Front Fork Clamp Bolts	20.5	2.09	15.1	AL
Frame				
Meter Cover Bolts	0.50	0.05	4.4 in·lb	
Rear View Mirror Locknuts (Upper)	18	1.8	13	Lh
Rear View Mirror Nuts (Lower)	30	3.1	22	
Inner Cover Bolts	1.0	0.10	8.9 in·lb	
Reflector Nuts (US, CA, CAL, AU, SEA-B1, MY and WVTA (FULL) Models)	4.15	0.423	37 in·lb	
Reflector Nuts (CN Model)	4.0	0.41	35 in·lb	
Lower Fairing Bolts (M6)	9.8	1.0	87 in·lb	
Lower Fairing Bolts (M5)	3.0	0.31	27 in·lb	L
Front Footpeg Bracket Bolts	25	2.5	18	
Heel Guard Bolts	6.9	0.70	61 in·lb	
Seat Bracket Bolts	6.9	0.70	61 in·lb	S
Seat Cover Bolts	5.0	0.51	44 in·lb	
Rear Footpeg Bracket Bolts	25	2.5	18	
Side Stand Switch Bolt	8.8	0.90	78 in·lb	L
Side Stand Bolt	44	4.5	32	S
Side Stand Nut	29	3.0	21	R, S
Windshield Bolts (Special Edition Models)	0.50	0.05	4.4 in·lb	
Radiator Guard Bolts (Special Edition Models)	6.9	0.70	61 in·lb	
Middle Front Engine Mounting Bolts	44	4.5	32	
Frame Slider Cover Bolts (Special Edition Models)	0.50	0.05	4.4 in·lb	
Front Axle Slider Nut (Special Edition Models)	34	3.5	25	R
Electrical System				
Meter Cover Bolts	0.50	0.05	4.4 in·lb	
Turn Signal Light Lens Screws	1.0	0.10	8.9 in·lb	
License Plate Light Screws	1.2	0.12	11 in·lb	
Switch Housing Screws	3.5	0.36	31 in·lb	
Front Brake Light Switch Screw	1.2	0.12	11 in·lb	
Side Stand Switch Bolt	8.8	0.90	78 in·lb	L
Oil Pressure Switch	15	1.5	11	LG
Oil Pressure Switch Terminal Bolt	2.0	0.20	18 in·lb	G
Gear Position Sensor Bolt	10	1.0	89 in·lb	L
Alternator Cover Bolts	12	1.2	106 in·lb	
Alternator Lead Holding Plate Bolt	12	1.2	106 in·lb	L

Torque and Locking Agent

Fastener	Torque			Remarks
	N·m	kgf·m	ft·lb	
Stator Coil Bolts	12	1.2	106 in·lb	L
Alternator Rotor Bolt	155	15.8	114	
Starter Motor Clutch Bolts	12	1.2	106 in·lb	L
Crankshaft Sensor Bolts	6.0	0.61	53 in·lb	
Crankshaft Sensor Cover Bolts	12	1.2	106 in·lb	L (1)
Timing Rotor Bolt	39	4.0	29	
Starter Motor Through Bolts	5.0	0.51	44 in·lb	
Brush Holder Screw	3.8	0.39	34 in·lb	
Starter Motor Mounting Bolts	9.8	1.0	87 in·lb	
Starter Motor Terminal Locknut	11	1.1	97 in·lb	
Starter Motor Cable Terminal Nut	5.9	0.60	52 in·lb	
Starter Relay Terminal Bolts	3.9	0.40	35 in·lb	
Engine Ground Cable Terminal Bolt	10	1.0	89 in·lb	
Spark Plugs	13	1.3	115 in·lb	
Water Temperature Sensor	12	1.2	106 in·lb	
Fuel Pump Bolts	9.8	1.0	87 in·lb	L, S
Oxygen Sensor	44	4.5	32	

The table below, relating tightening torque to thread diameter, lists the basic torque for the bolts and nuts. Use this table for only the bolts and nuts which do not require a specific torque value. All of the values are for use with dry solvent-cleaned threads.

Basic Torque for General Fasteners

Threads Diameter (mm)	Torque		
	N·m	kgf·m	ft·lb
5	3.4 ~ 4.9	0.35 ~ 0.50	30 ~ 43 in·lb
6	5.9 ~ 7.8	0.60 ~ 0.80	52 ~ 69 in·lb
8	14 ~ 19	1.4 ~ 1.9	10 ~ 13.5
10	25 ~ 34	2.6 ~ 3.5	19 ~ 25
12	44 ~ 61	4.5 ~ 6.2	33 ~ 45
14	73 ~ 98	7.4 ~ 10.0	54 ~ 72
16	115 ~ 155	11.5 ~ 16.0	83 ~ 115
18	165 ~ 225	17.0 ~ 23.0	125 ~ 165
20	225 ~ 325	23.0 ~ 33.0	165 ~ 240

Specifications

Item	Standard	Service Limit
Fuel System (DFI)		
Throttle Grip Free Play	2 ~ 3 mm (0.08 ~ 0.12 in.)	– – –
Idle Speed	1 100 ±50 r/min (rpm)	– – –
Throttle Body Vacuum	37.3 ±1.3 kPa (280 ±10 mmHg) at idle speed	– – –
Bypass Screws (Turn Out)	– – –	– – –
Air Cleaner Element	Viscous paper element	– – –
Cooling System		
Coolant:		
Type (Recommended)	Permanent type of antifreeze	– – –
Color	Green	– – –
Mixed Ratio	Soft water 50, coolant 50	– – –
Freezing Point	–35°C (–31°F)	– – –
Total Amount	2.4 L (2.5 US qt) (MY) 2.5 L (2.6 US qt)	– – – – – –
Engine Top End		
Valve Clearance:		
Exhaust	0.22 ~ 0.31 mm (0.0087 ~ 0.0122 in.)	– – –
Intake	0.13 ~ 0.22 mm (0.0051 ~ 0.0087 in.)	– – –
Clutch		
Clutch Lever Free Play	2 ~ 3 mm (0.08 ~ 0.12 in.)	– – –
Engine Lubrication System		
Engine Oil:		
Type	API SG, SH, SJ, SL or SM with JASO MA, MA1 or MA2	– – –
Viscosity	SAE 10W-40	– – –
Capacity	3.2 L (3.4 US qt) (When filter is not removed.)	– – –
	3.6 L (3.8 US qt) (When filter is removed.)	– – –
	4.0 L (4.2 US qt) (When engine is completely dry.)	– – –
Level	Between upper and lower level lines (Wait several minutes after idling or running)	– – –
Wheels/Tires		
Tread Depth:		
Front	4.0 mm (0.16 in.)	1 mm (0.04 in.), (AT, CH, DE) 1.6 mm (0.06 in.)
Rear	5.3 mm (0.21 in.)	Up to 130 km/h (80 mph): 2 mm (0.08 in.) Over 130 km/h (80 mph): 3 mm (0.12 in.)
Air Pressure (when cold):		
Front	Up to 180 kg (397 lb) load: 250 kPa (2.50 kgf/cm², 36 psi)	– – –
Rear	Up to 180 kg (397 lb) load: 290 kPa (2.90 kgf/cm², 42 psi)	– – –

2-12 PERIODIC MAINTENANCE

Specifications

Item	Standard	Service Limit
Final Drive		
Drive Chain Slack	25 ~ 35 mm (1.0 ~ 1.4 in.)	– – –
Drive Chain 20-link Length	317.5 ~ 318.2 mm (12.50 ~ 12.53 in.)	319 mm (12.6 in.)
Standard Chain:		
Make	ENUMA	– – –
Type	EK525RMX3/3D	– – –
Link	114 links	– – –
Brakes		
Brake Fluid:		
Grade	DOT4	– – –
Brake Pad Lining Thickness:		
Front	4 mm (0.16 in.)	1 mm (0.04 in.)
Rear	5 mm (0.20 in.)	1.4 mm (0.06 in.)
Brake Light Timing:		
Front	Pulled ON	– – –
Rear	ON after about 6 mm (0.24 in.) of pedal travel	– – –
Electrical System		
Spark Plug:		
Type	NGK CR9EIA-9	– – –
Gap	0.8 ~ 0.9 mm (0.031 ~ 0.035 in.)	– – –

Special Tools

Inside Circlip Pliers:
57001-143

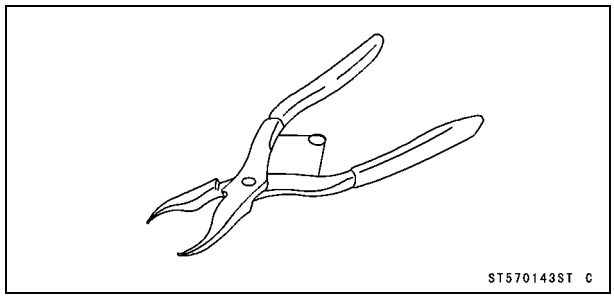

Throttle Sensor Setting Adapter:
57001-1538

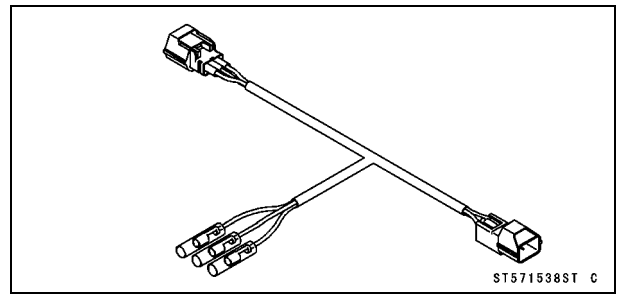

Steering Stem Nut Wrench:
57001-1100

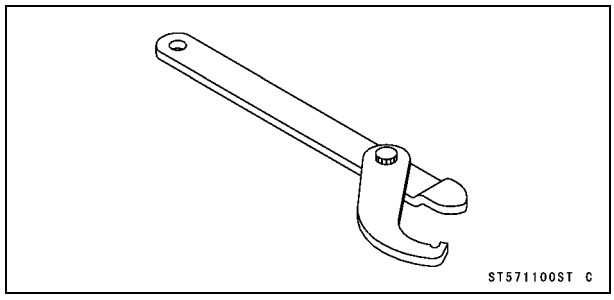

Extension Tube:
57001-1578

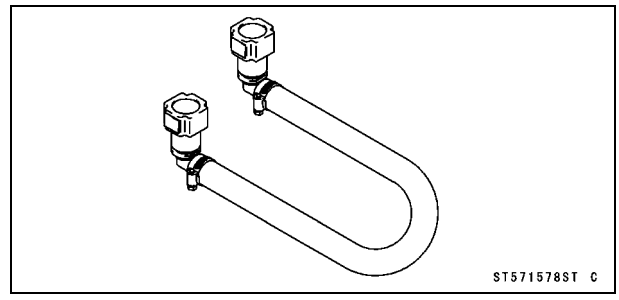

Pilot Screw Adjuster, A:
57001-1239

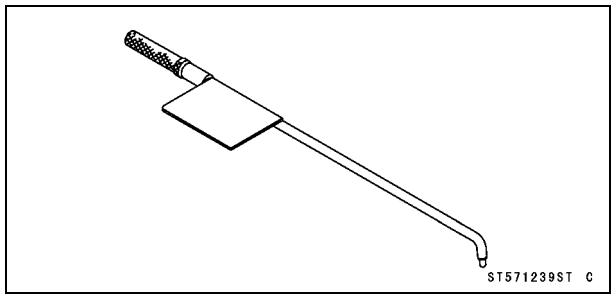

Brake Caliper Piston Pliers (ϕ26 ~ ϕ36):
57001-1862

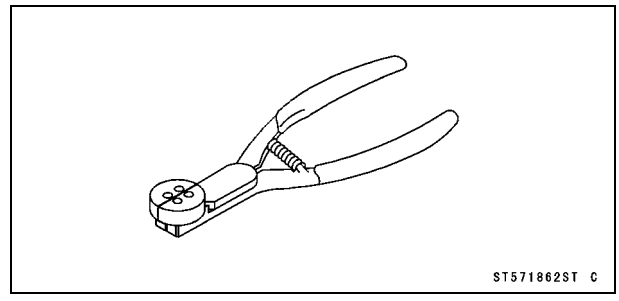

Oil Filter Wrench:
57001-1249

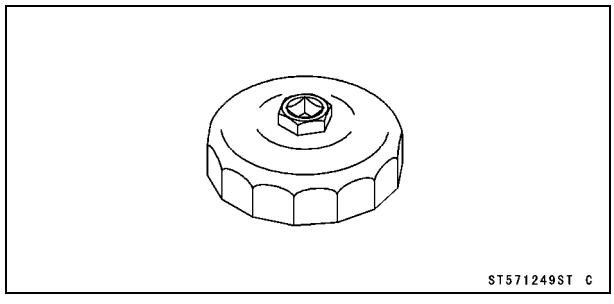

Adjustable Hook Wrench:
57001-1863

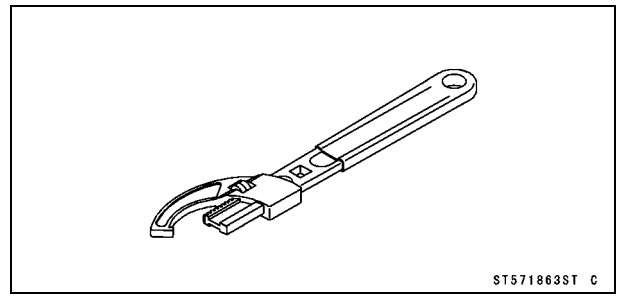

Vacuum Gauge:
57001-1369

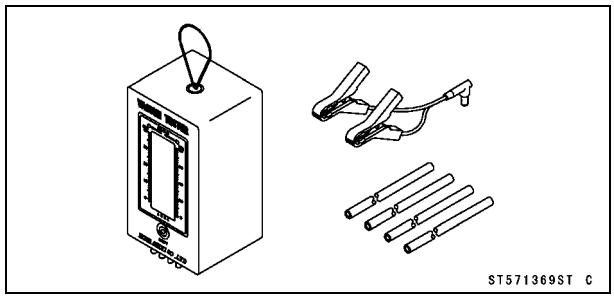

Periodic Maintenance Procedures

Fuel System (DFI)

Air Cleaner Element Replacement

NOTE

○*In dusty areas, the element should be replaced more frequently than the recommended interval.*

⚠ WARNING

If dirt or dust is allowed to pass through into the throttle body assy, the throttle may become stuck, possibly causing accident. Replace the air cleaner element according to the maintenance chart.

NOTICE

If dirt gets through into the engine, excessive engine wear and possibly engine damage will occur.

● Remove:
Fuel Tank (see Fuel Tank Removal in the Fuel System (DFI) chapter)
ECU (see ECU Removal in the Fuel System (DFI) chapter)
Connector Bracket [A]
Air Cleaner Housing Assembly Screws [B]
Upper Air Cleaner Housing [C]

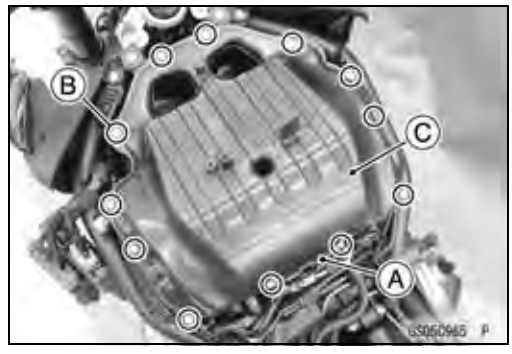

● Discard the air cleaner element [A].

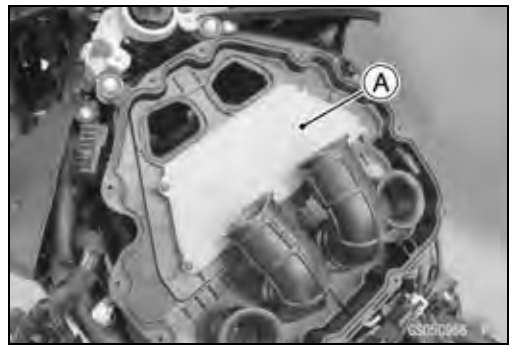

● Install a new element [A] so that the screen side [B] faces upward.
● Install:
Upper Air Cleaner Housing
● Tighten:

Torque - Air Cleaner Housing Assembly Screws: 1.1 N·m (0.11 kgf·m, 10 in·lb)

● Install:
ECU (see ECU Installation in the Fuel System (DFI) chapter)
Fuel Tank (see Fuel Tank Installation in the Fuel System (DFI) chapter)

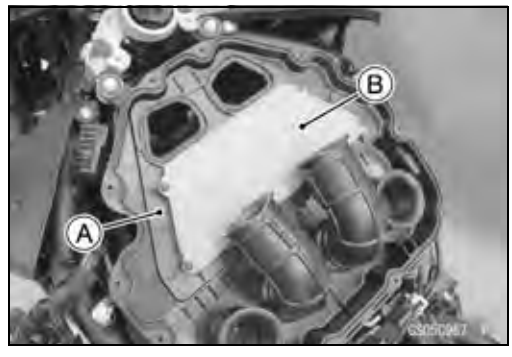

Periodic Maintenance Procedures

Idle Speed Inspection

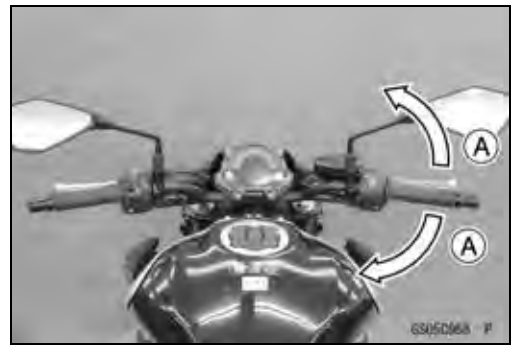

- Start the engine and warm it up thoroughly.
- With the engine idling, turn the handlebars to both sides [A].

★If handlebars movement changes the idle speed, the throttle cables may be improperly adjusted or incorrectly routed, or damaged. Be sure to correct any of these conditions before riding (see Throttle Control System Inspection and Cable, Wire, and Hose Routing section in the Appendix chapter).

⚠ WARNING

Operation with improperly adjusted, incorrectly routed or damaged cables could result in an unsafe riding condition. Follow the service manual to be make sure to correct any of these conditions.

- Check the idle speed.

★If the idle speed is out of specified range, adjust it.

Idle Speed
Standard: 1 100 ±50 r/min (rpm)

Idle Speed Adjustment

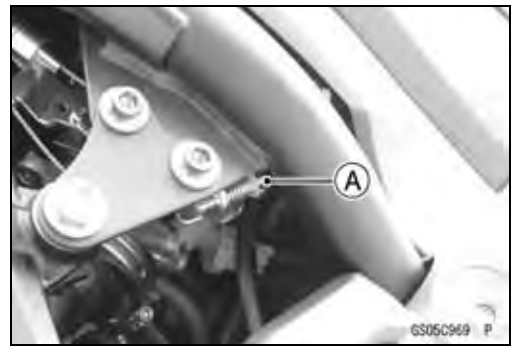

- Start the engine and warm it up thoroughly.
- Turn the adjusting screw [A] until the idle speed is correct.

○Open and close the throttle a few times to make sure that the idle speed is within the specified range. Readjust if necessary.

Throttle Control System Inspection

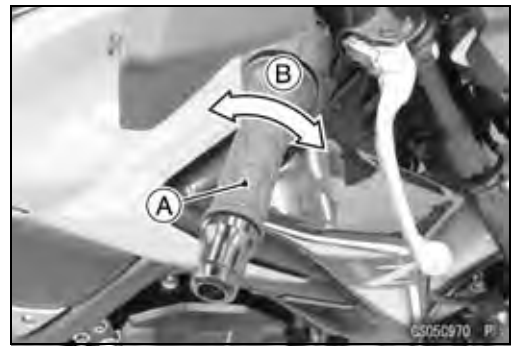

- Check that the throttle grip [A] moves smoothly from full open to close, and the throttle closes quickly and completely by the return spring in all steering positions.

★If the throttle grip does not return properly, check the throttle cable routing, grip free play, and cable damage. Then lubricate the throttle cable.

- Check the throttle grip free play [B].

Throttle Grip Free Play
Standard: 2 ~ 3 mm (0.08 ~ 0.12 in.)

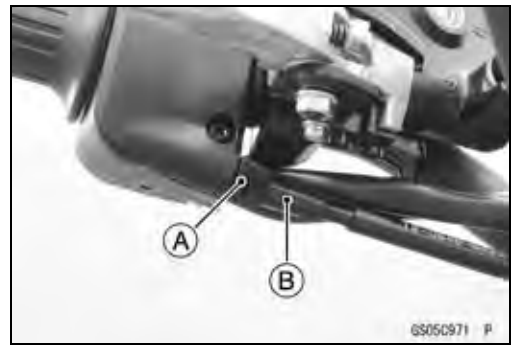

★If the free play is incorrect, adjust the throttle cable as follows.

- Loosen the locknut [A], and turn the adjuster [B] until the proper amount of throttle grip play is obtained.
- Tighten the locknut.

★If the free play can not be adjusted, go to the next step.

Periodic Maintenance Procedures

● Remove:
Air Cleaner Housing (see Air Cleaner Housing Removal in the Fuel System (DFI) chapter)
● Loosen the locknuts [A] [B].
● Screw both throttle cable adjusters [C] [D] to give the throttle grip plenty of play.
● Turn the decelerator cable adjuster [C] until there is no play when the throttle grip play completely closed.
● Tighten the locknut [A].
● Turn the accelerator cable adjuster [D] until 2 ~ 3 mm (0.08 ~ 0.12 in.) of throttle grip play is obtained.
● Tighten the locknut [B].
★If the free play can not be adjusted with the adjusters, replace the throttle cable.

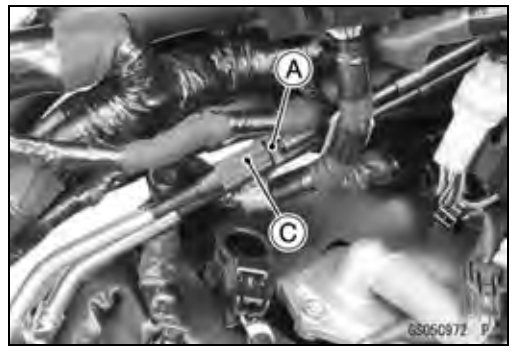

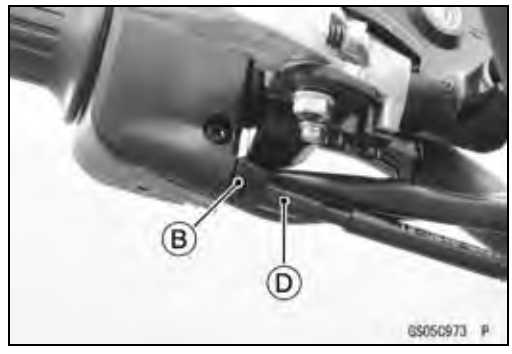

Engine Vacuum Synchronization Inspection

NOTE

○*These procedures are explained on the assumption that the intake and exhaust systems of the engine are in good condition.*

● Situate the motorcycle so that it is vertical.
● Remove:
Fuel Tank (see Fuel Tank Removal in the Fuel System (DFI) chapter)
Air Cleaner Housing (see Air Cleaner Housing Removal in the Fuel System (DFI) chapter)
Fuel Hose (see Fuel Hose Replacement)
● Disconnect the vacuum hoses [A].

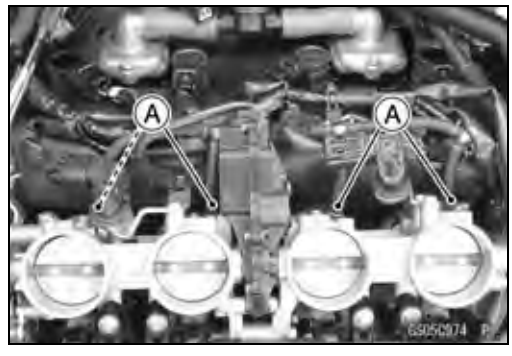

Periodic Maintenance Procedures

● Connect a vacuum gauge and hoses [A] (Special Tool: 57001-1369) to the fittings on the throttle body.

Special Tool - Vacuum Gauge: 57001-1369

● Connect a highly accurate tachometer lead [B] to one of the stick coil primary leads.

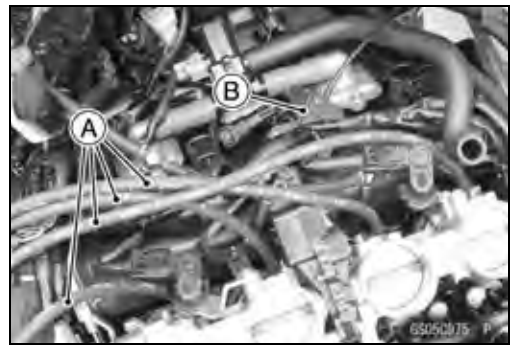

● Plug the air switching valve hose end [A] and air cleaner housing fitting [B].

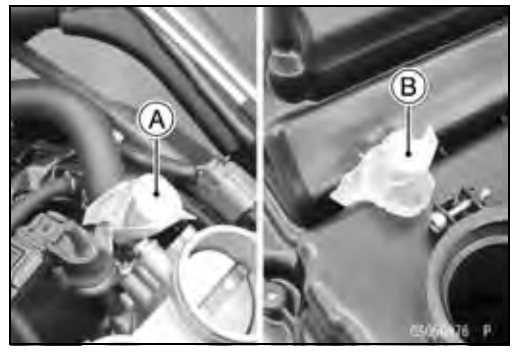

● Install the air cleaner housing (see Air Cleaner Housing Installation in the Fuel System (DFI) chapter).

● Connect the following parts temporarily.
Fuel Pump Lead Connector [A]
Extension Tube [B]

Special Tool - Extension Tube: 57001-1578

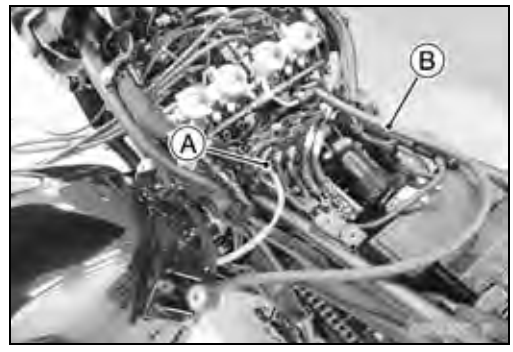

● Start the engine and warm it up thoroughly.

● Check the idle speed, using a highly accurate tachometer [A].

Idle Speed
Standard: 1 100 ±50 r/min (rpm)

★If the idle speed is out of the specified range, adjust it with the adjusting screw (see Idle Speed Adjustment).

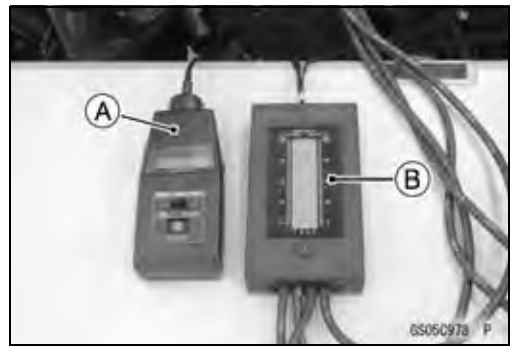

NOTICE
Do not measure the idle speed by the tachometer of the meter unit.

● While idling the engine, inspect the throttle body vacuum, using the vacuum gauge [B].

Throttle Body Vacuum
Standard: 37.3 ±1.3 kPa (280 ±10 mmHg) at idle speed

Periodic Maintenance Procedures

★If any vacuum is not within specifications, adjust the bypass screws [A].

Special Tool - Pilot Screw Adjuster, A [B]: 57001-1239

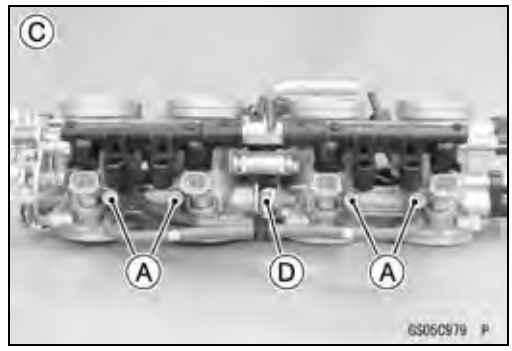

NOTE

○*In this photo [C], the throttle body assy has been removed for clarity.*

- Adjust the each vacuum (#1 ~ #4) to the standard value.
- Open and close the throttle valves after each measurement.

NOTE

○*Do not turn the center adjusting screw [D].*

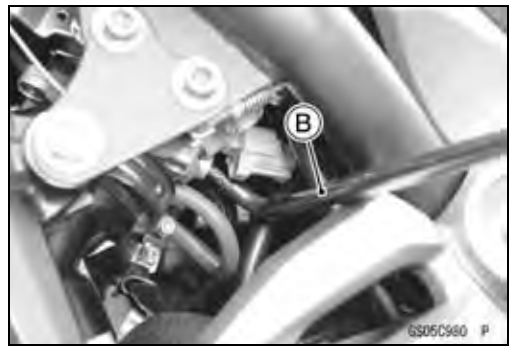

- Check the vacuums as before.

★If all vacuums are within the specification range, finish the engine vacuum synchronization.

★If any vacuum can not be adjusted within the specification, replace the bypass screws #1 ~ #4 with new ones, refer to the following procedure.

- Remove the throttle body assy (see Throttle Body Assy Removal in the Fuel System (DFI) chapter).
- Turn in the bypass screw [A] with counting the number of turns until it seals fully but not tightly. Record the number of turns.
- Remove:
  Bypass Screw
  Spring [B]
  Washer [C]
  O-ring [D]

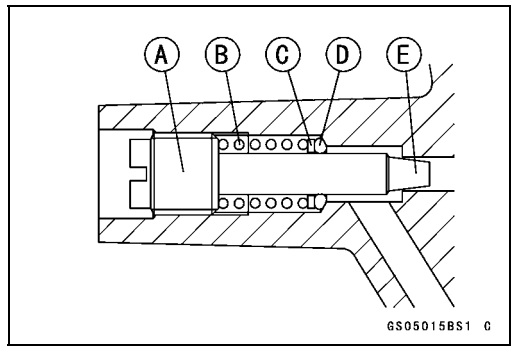

- Check the bypass screw hole in the throttle body for carbon deposits.

★If any carbons accumulate, wipe the carbons off from the hole, using a cotton pad penetrated with a high flash-point solvent.

- Replace the bypass screw, spring, washer and O-ring as a set.
- Turn in the bypass screw until it seats fully but not tightly.

NOTICE
Do not over-tighten the bypass screw. The tapered portion [E] of the bypass screw could be damaged.

- Back out the same number of turns counted when first turned in. This is to set the screw to its original position.

NOTE

○*A throttle body assy has different "turns out" of the bypass screw for each individual unit. On setting the bypass screw, use the "turns out" determined during disassembly.*

Periodic Maintenance Procedures

● Repeat the same procedure for other bypass screws.
● Repeat the synchronization.
★If the vacuums are correct, check the output voltage of the main throttle sensor (see Main Throttle Sensor Output Voltage Inspection in the Fuel System (DFI) chapter).

Special Tool - Throttle Sensor Setting Adapter: 57001 -1538

Main Throttle Sensor Output Voltage
Connections to Adapter:
Digital Meter (+) → R (sensor Y/W) lead
Digital Meter (–) → BK (sensor G) lead

Standard: DC 1.00 ~ 1.02 V at idle throttle opening

★If the output voltage is out of the standard, check the input voltage of the main throttle sensor (see Main Throttle Sensor Input Voltage Inspection in the Fuel System (DFI) chapter).

● Remove the vacuum gauge hoses.
● Connect the vacuum hoses.
○Run the vacuum hoses according to Cable, Wire, and Hose Routing section in the Appendix chapter.
● Install the removed parts (see appropriate chapters).

Fuel System Inspection

Fuel Hose Inspection (fuel leak, damage, installation condition)

○If the motorcycle is not properly handled, the high pressure inside the fuel line can cause fuel to leak [A] or the hose to burst. Remove the fuel tank (see Fuel Tank Removal in the Fuel System (DFI) chapter) and check the fuel hose.
★Replace the fuel hose if any fraying, cracks [B] or bulges [C] are noticed.

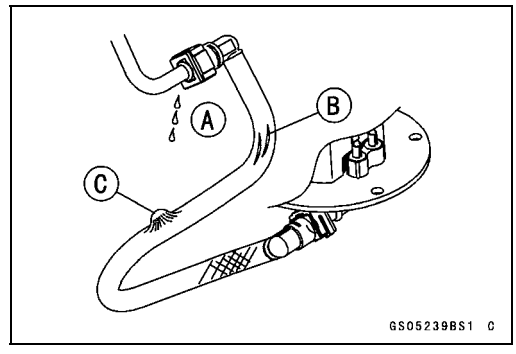

● Check that the fuel hose is routed according to Cable, Wire, and Hose Routing section in the Appendix chapter.
★Replace the hose if it has been sharply bent or kinked.
Hose Joints [A]
Fuel Hose [B]

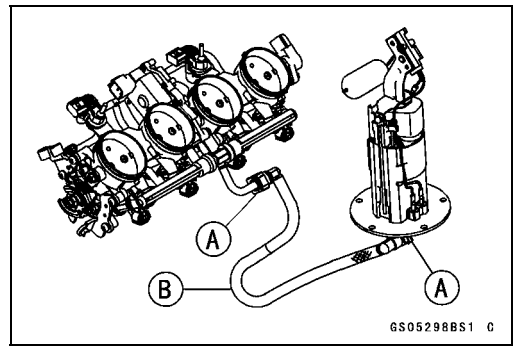

Periodic Maintenance Procedures

● Check that the fuel hose joints are securely connected.
○Push and pull [A] the fuel hose joint [B] back and forth more than two times, and make sure it is locked.

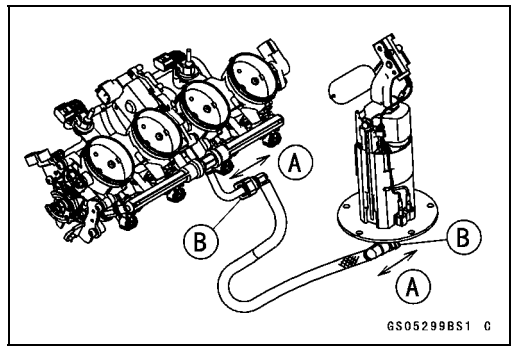

⚠ WARNING

Leaking fuel can cause a fire or explosion resulting in serious burns. Make sure the hose joint is installed correctly on the delivery pipe by sliding the joint.

★If it does not lock, reinstall the hose joint.

Fuel Filter Replacement

⚠ WARNING

Gasoline is extremely flammable and can be explosive under certain conditions, creating the potential for serious burns. Make sure the area is well ventilated and free from any source of flame or sparks; this includes any appliance with a pilot light. Do not smoke. Turn the ignition switch off. Disconnect the battery (-) terminal. To avoid fuel spills, draw it from the tank when the engine is cold. Be prepared for fuel spillage; any spilled fuel must be completely wiped up immediately.

NOTICE

Never drop the fuel pump especially on a hard surface. Such a shock to the pump can damage it.

● Remove:
Fuel Pump (see Fuel Pump Removal in the Fuel System (DFI) chapter)
Fuel Pump Assembly Screws [A]
Lead Terminals [B]
● Free the leads from the clamp [C].

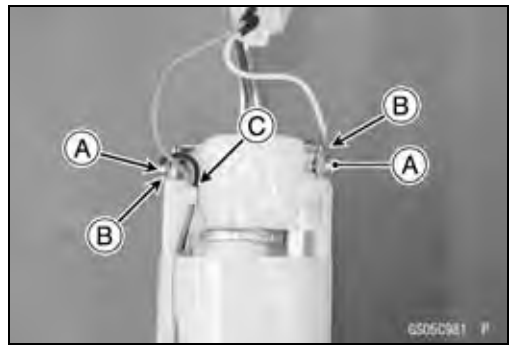

● Disconnect:
Lead Connector (Pink) [A]
Lead Connector (Light Blue) [B]

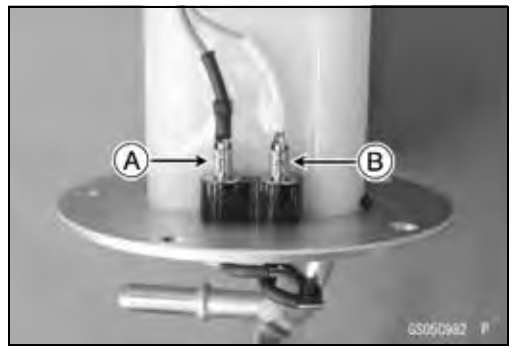

Periodic Maintenance Procedures

- Using the flat tip screwdriver [A], remove the fuel pump case [B] from the fuel pump body [C].

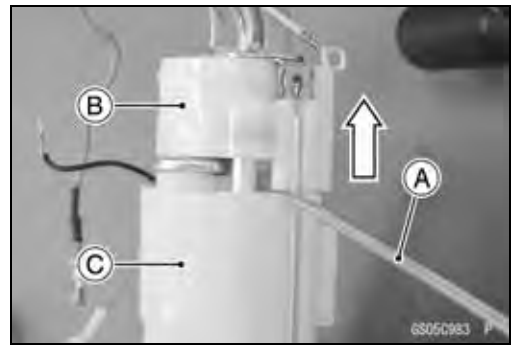

- Remove the O-ring [A].
- Remove the fuel pump body [B] from the installation plate [C].

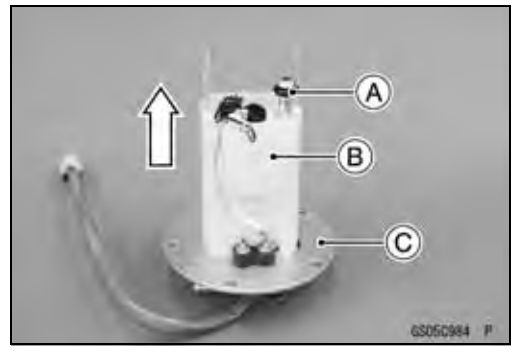

- Remove the fuel filter [A].

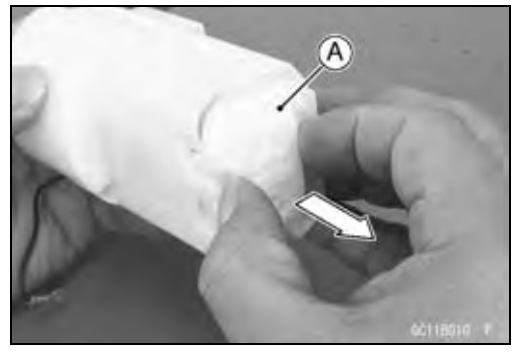

- Replace the fuel filter [A] with a new one, and install it.

Periodic Maintenance Procedures

● Replace the following parts with new ones.
O-rings [A]
Fuel Pump Assembly Screws [B]

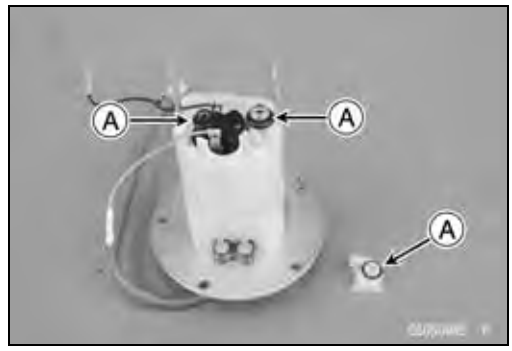

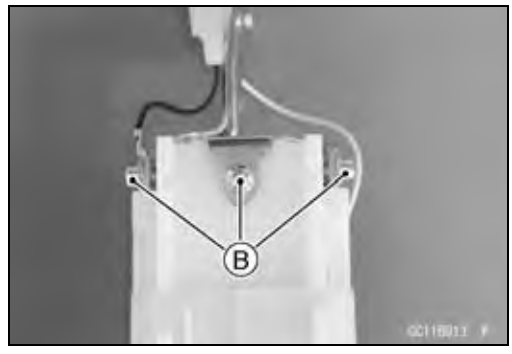

● Install the removed parts in the reverse procedure.
● Install the cap [A] so that the light blue lead terminal is covered as shown.
● Tighten:

Torque - Fuel Pump Assembly Screws: 0.98 N·m (0.10 kgf·m, 8.7 in·lb)

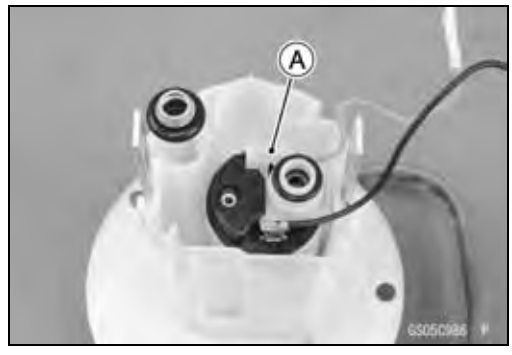

Fuel Hose Replacement

● Remove the fuel tank (see Fuel Tank Removal in the Fuel System (DFI) chapter).
● Remove the connector bracket from the air cleaner housing.
● Be sure to place a piece of cloth around the fuel hose joint.
● Wipe off the dirt of the surface [A] around the connection using a cloth or a soft brush.

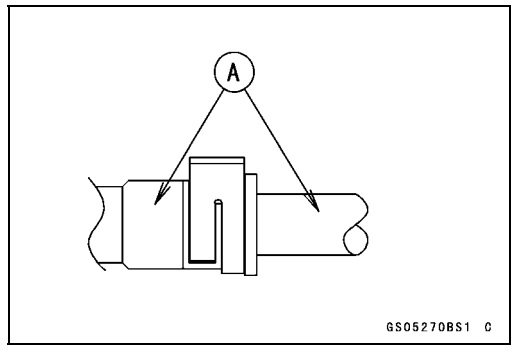

Periodic Maintenance Procedures

When removing with flat tip screwdriver

- Insert the flat tip screwdriver [A] into slit on the joint lock [B].
- Turn the driver to disconnect the joint lock.

When removing with fingers

- Open and push up [C] the joint lock with your fingers.

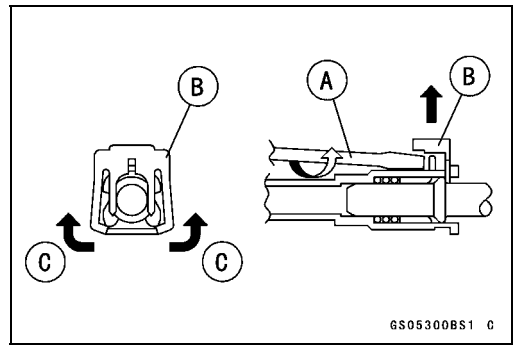

NOTICE

Prying or excessively widening the joint lock ends for fuel hose removal will permanently deform the joint lock, resulting in a loose or incomplete lock that may allow fuel to leak and create the potential for a fire explosion. To prevent fire or explosion from a damaged joint lock, do not pry or excessively widen the joint lock ends when removing the fuel hose. The joint lock has a retaining edge that locks around the housing.

- Pull the fuel hose joint [A] out of the delivery pipe [B].

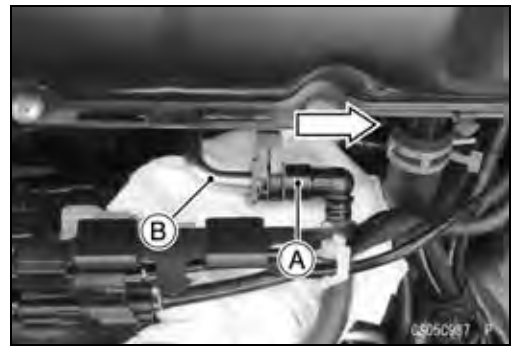

⚠ WARNING

Fuel is flammable and explosive under certain conditions and can cause severe burns. Be prepared for fuel spillage; any spilled fuel must be completely wiped up immediately. When the fuel hose is disconnected, fuel spills out from the hose and the pipe. Cover the hose connection with a clean shop towel to prevent fuel spillage.

- Clean the delivery pipe.
- Cover the delivery pipe with the vinyl bag to keep it clean.
- Remove the vinyl bag on the pipe.
- Check that there are no flaws, burrs, and adhesion of foreign materials on the delivery pipe [A].

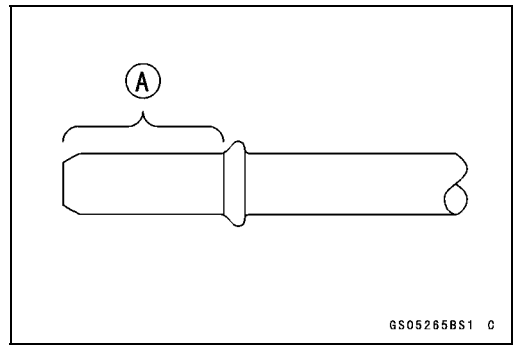

- Replace the fuel hose with a new one.
- Run the fuel hose correctly (see Cable, Wire, and Hose Routing section in the Appendix chapter).
- Insert [A] the fuel hose joint [B] straight onto the delivery pipe until the hose joint clicks.
- Push [C] the joint lock [D].

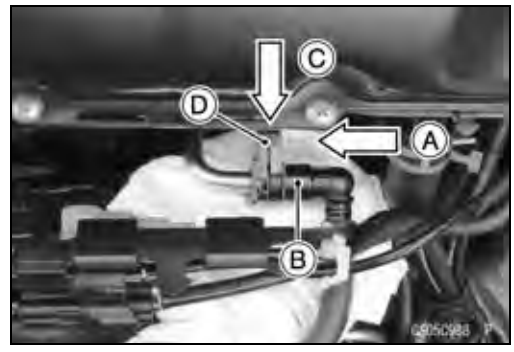

Periodic Maintenance Procedures

● Push and pull [A] the fuel hose joint [B] back and forth more than two times and make sure it is locked and does not come off.

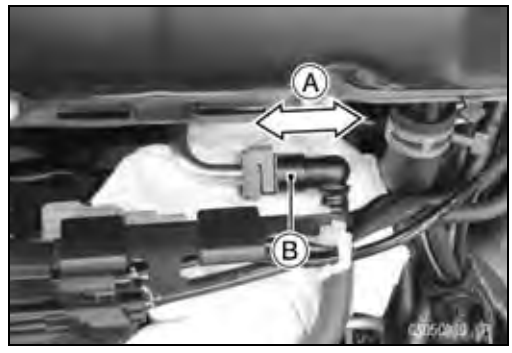

⚠ WARNING

Leaking fuel can cause a fire or explosion resulting in severe burns. Make sure the fuel hose joint is installed correctly on the delivery pipe and that it doesn't leak.

★If it comes off, reinstall the hose joint.
● Install the removed parts (see appropriate chapters).
● Start the engine and check the fuel hose for leaks.

Evaporative Emission Control System Inspection (Equipped Models)

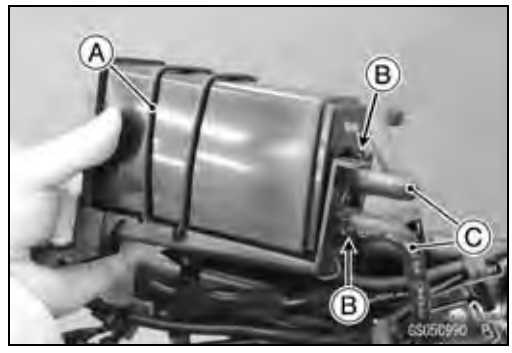

● Inspect the canister as follows.
● Remove the canister holder (see Battery Case Removal in the Frame chapter).
● Remove the band [A].
● Slide the clamps [B].
● Disconnect the hoses [C].
● Remove the canister.
● Visually inspect the canister for cracks or other damage.
★If the canister has any cracks or bad damage, replace it with a new one.

NOTE

○*The canister is designed to work well through the motorcycle's life without any maintenance if it is used under normal conditions.*

● Inspect the purge valve (see Purge Valve Inspection in the Fuel System (DFI) chapter).
○Check that the hoses are securely connected and clips are in position.
○Replace any kinked, deteriorated or damaged hoses.
○Run the hoses according to Cable, Wire, and Hose Routing section in the Appendix chapter.
○When installing the hoses, avoid sharp bending, kinking, flattening or twisting, and run the hoses with a minimum of bending so that the emission flow will not be obstructed.

Periodic Maintenance Procedures

Cooling System

Coolant Level Inspection

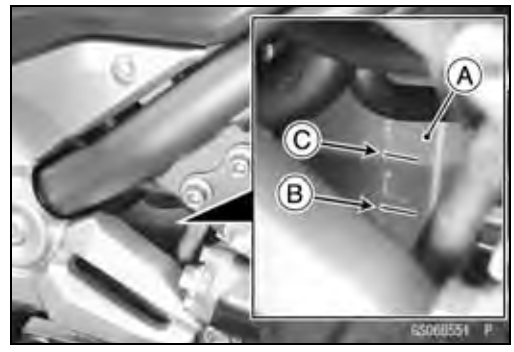

NOTE

○*Check the level when the engine is cold (room or ambient temperature).*

- Check the coolant level in the reserve tank [A] with the motorcycle held perpendicular (Do not use the side stand).

★If the coolant level is lower than the "L" level line [B], unscrew the reserve tank cap and add coolant to the "F" level line [C].

"L": Low
"F": Full

NOTICE

For refilling, add the specified mixture of coolant and soft water. Adding water alone dilutes the coolant and degrades its anticorrosion properties. The diluted coolant can attack the aluminum engine parts. In an emergency, soft water alone can be added. But the diluted coolant must be returned to the correct mixture ratio within a few days.
If coolant must be added often or the reservoir tank has run completely dry, there is probably leakage in the cooling system. Check the system for leaks.
Coolant ruins painted surfaces. Immediately wash away any coolant that spills on the frame, engine, wheels or other painted parts.

Cooling System Inspection

Water Hose and Pipe Inspection (coolant leak, damage, installation condition)

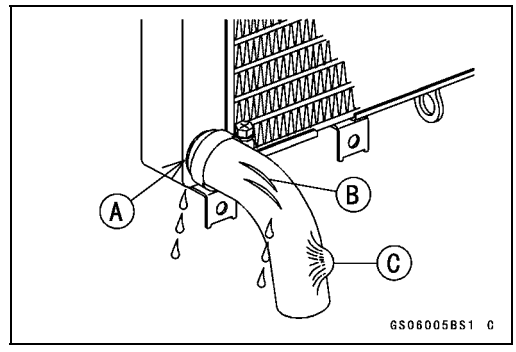

○The high pressure inside the water hose can cause coolant to leak [A] or the hose to burst if the line is not properly maintained.

- Visually inspect the hoses for signs of deterioration. Squeeze the hoses. A hose should not be hard and brittle, nor should it be soft or swollen.

★Replace the hose if any fraying, cracks [B] or bulges [C] are noticed.

- Check that the hoses and clamps are securely connected.

Coolant Change

⚠ WARNING

Coolant can be extremely hot and cause severe burns, is toxic and very slippery. Do not remove the radiator cap or attempt to change the coolant when the engine is hot; allow it cool completely. Immediately wipe any spilled coolant from tires, frame, engine or other painted parts. Do not ingest coolant.

Periodic Maintenance Procedures

● Remove:
Right Inner Cover (see Inner Cover Removal in the Frame chapter)
Radiator Cap [A]

○Remove the radiator cap in two steps. First turn the cap counterclockwise to the first stop. Then push and turn it further in the same direction and remove the cap.

● Remove the left lower fairing (see Lower Fairing Removal in the Frame chapter).
● Place a container under the drain bolt [A] of the water pump cover.
● Drain the coolant from the radiator by removing the drain bolt.

● Remove:
Left Frame Cover (see Frame Cover Removal in the Frame chapter)
Coolant Reserve Tank Cap [A]

● Slide the clamp [A].
● Disconnect the radiator overflow hose [B].

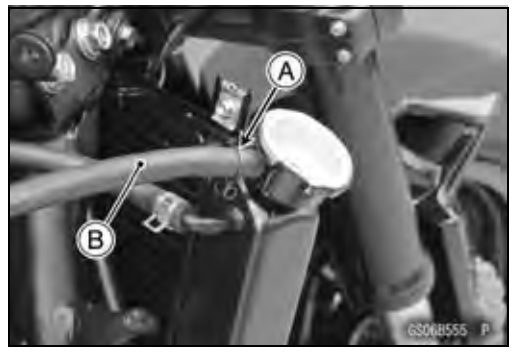

● Pull [A] the radiator overflow hose [B] toward coolant reserve tank with making sure not to spilling the coolant.

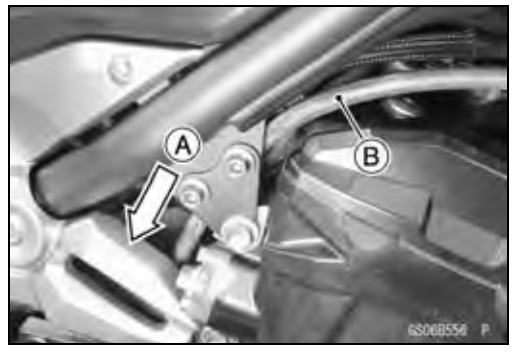

Periodic Maintenance Procedures

- Run the radiator overflow hose [A] under the right frame cover [B] as shown.
- Drain the coolant from the coolant reserve tank.
- Run the radiator overflow hose according to Cable, Wire, and Hose Routing section in the appendix chapter, and connect it.

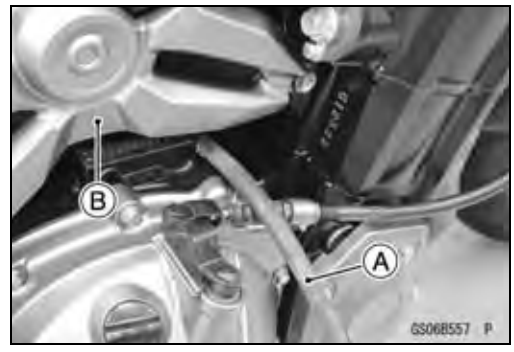

- When filling the coolant, choose a suitable mixture ratio by referring to the coolant manufacturer's directions.

NOTICE
Soft or distilled water must be used with the antifreeze in the cooling system. **If hard water is used in the system, it causes scales accumulation in the water passages, and considerably reduces the efficiency of the cooling system.**

Water and Coolant Mixture Ratio (Recommended)

Soft Water:	**50%**
Coolant:	**50%**
Freezing Point:	**–35°C (–31°F)**
Total Amount:	**2.4 L (2.5 US qt)**
	(MY) 2.5 L (2.6 US qt)

- Fill the radiator up to the filler neck [A] with coolant.

NOTE

○*Pour in the coolant slowly so that it can expel the air from the engine and radiator.*

- Check the cooling system for leaks.
- Tap the water hoses to force any air bubbles caught inside.
- Fill the radiator up to the filler neck with coolant.
- Install the radiator cap.

- Fill the reserve tank up to the "F" (full) level line [A] with coolant and install the cap.
- Start the engine, warm it up thoroughly until the radiator fan turns on and then stop the engine.
- Check the coolant level in the reserve tank after the engine cools down.

★If the coolant level is lower than the "L" (low) level line [B], add coolant to the "F" level line.

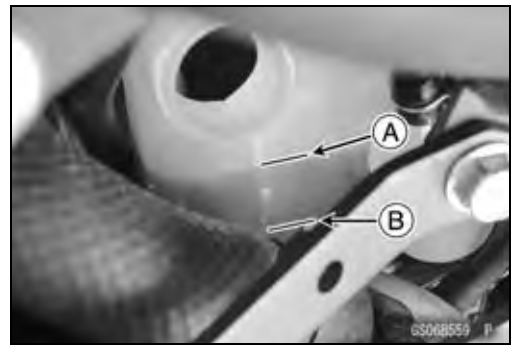

NOTICE
Do not add more coolant above the "F" level line.

Periodic Maintenance Procedures

Water Hose and O-ring Replacement

- Drain the coolant (see Coolant Change).
- Remove:
  Oil Passage Cover [A] or Oil Cooler [B] (see Oil Cooler Removal in the Engine Lubrication System chapter)
  Thermostat Housing [C] (see Thermostat Removal in the Cooling System chapter)
  Water Pump Housing [D] (see Water Pump Removal in the Cooling System chapter)
- Replace the hoses [E] and O-rings [F] with new ones.
- Run the new hoses according to Cable, Wire, and Hose Routing section in the Appendix chapter.
- Install the removed parts (see appropriate chapters).
- Fill the coolant (see Coolant Change).
- Check the cooling system for leaks.
  MY Model [G]

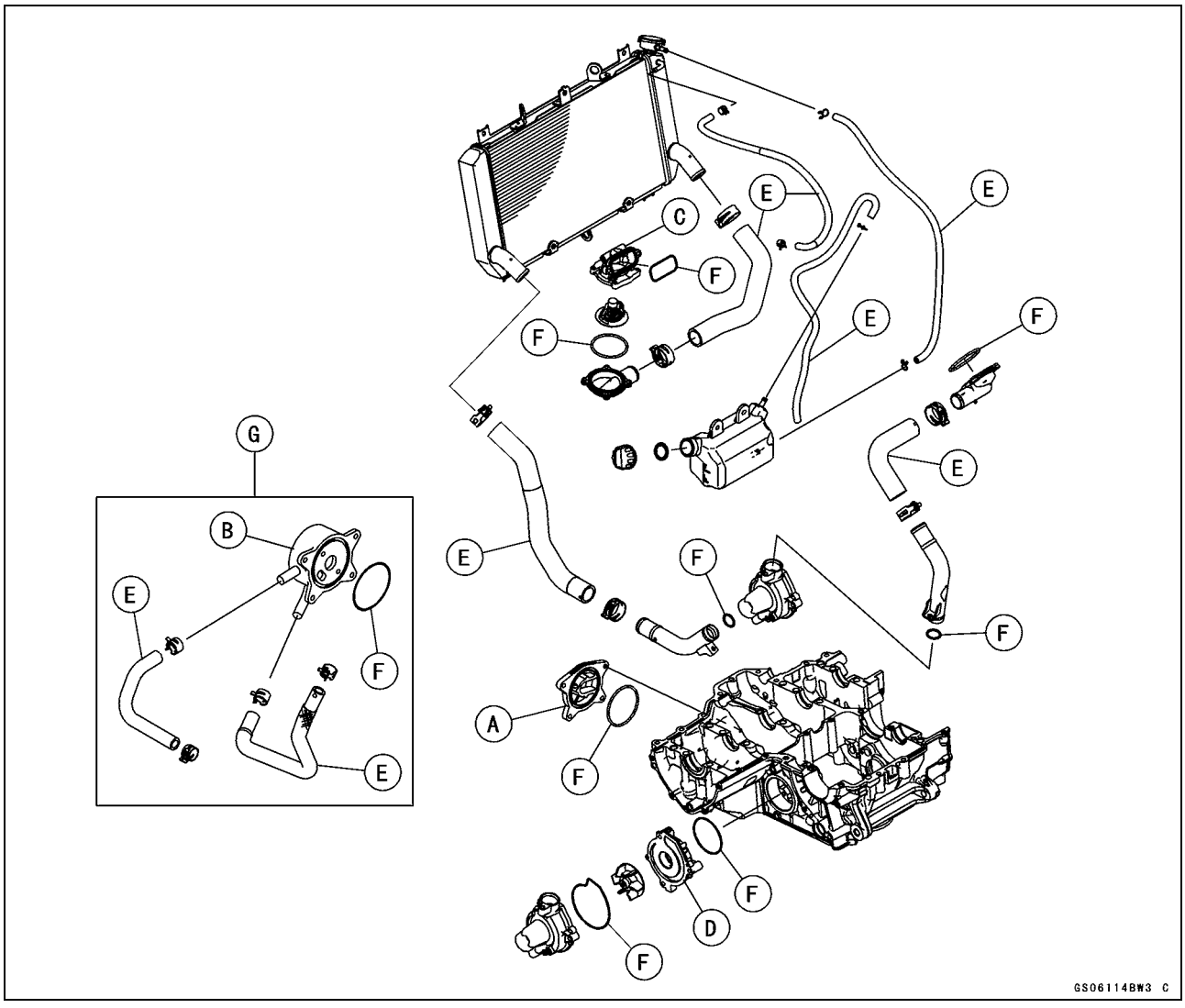

Periodic Maintenance Procedures

Engine Top End

Valve Clearance Inspection

NOTE

○*Valve clearance must be checked and adjusted when the engine is cold (at room temperature).*

● Remove:
Cylinder Head Cover (see Cylinder Head Cover Removal in the Engine Top End chapter)
Crankshaft Sensor Cover (see Crankshaft Sensor Removal in the Electrical System chapter)

● Using a wrench on the timing rotor bolt [A], turn the crankshaft clockwise until the line [B] (TDC mark for #1,4 pistons) on the timing rotor is aligned with the mating surface [C] of the crankcase.

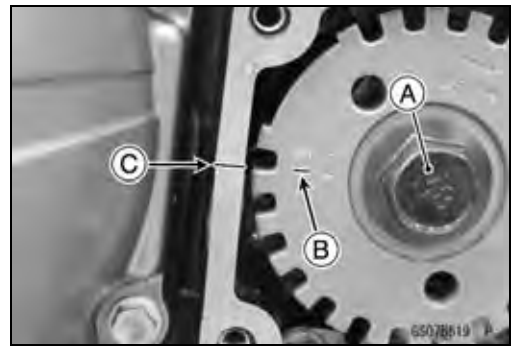

● Using a thickness gauge [A], measure the valve clearance between the cam and the valve lifter.

Valve Clearance
Standard:
Exhaust 0.22 ~ 0.31 mm (0.0087 ~ 0.0122 in.)
Intake 0.13 ~ 0.22 mm (0.0051 ~ 0.0087 in.)

NOTE

○*Thickness gauge is horizontally inserted on the valve lifter.*

Appropriateness [A]
Inadequacy [B]
Thickness Gauge [C]
Horizontally Inserts [D]
Cam [E]
Valve Lifter [F]
Hits the Valve Lifter Ahead [G]

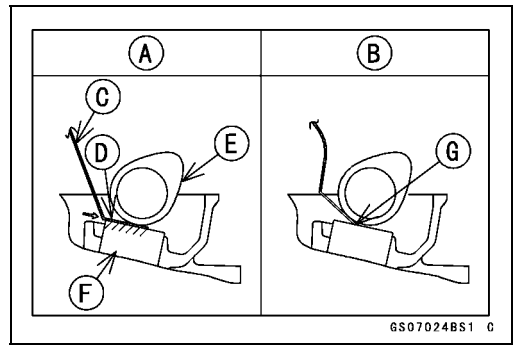

Periodic Maintenance Procedures

○**When positioning #1 piston TDC at the end of the compression stroke:**
Intake Valve Clearance of #1 and #3 Cylinders
Exhaust Valve Clearance of #1 and #2 Cylinders
Measuring Valve [A]

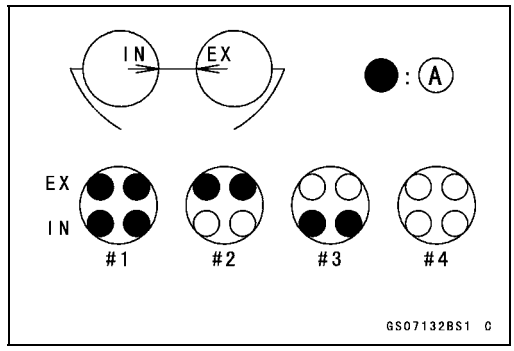

○**When positioning #4 piston TDC at the end of the compression stroke:**
Intake Valve Clearance of #2 and #4 Cylinders
Exhaust Valve Clearance of #3 and #4 Cylinders
Measuring Valve [A]

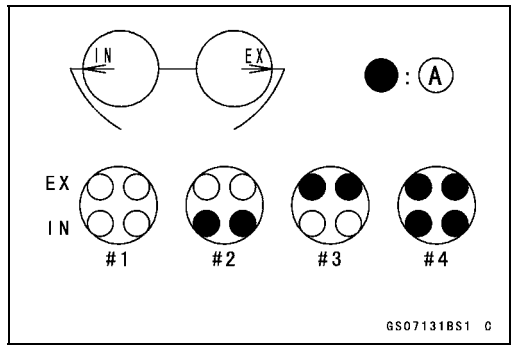

★If the valve clearance is not within the specified range, first record the clearance, and then adjust it.

Valve Clearance Adjustment

● To change the valve clearance, remove the camshaft chain tensioner, camshafts and valve lifters. Replace the shim with one of a different thickness.

NOTE

○*Mark and record the locations of the valve lifters and shims so that they can be reinstalled in their original positions.*

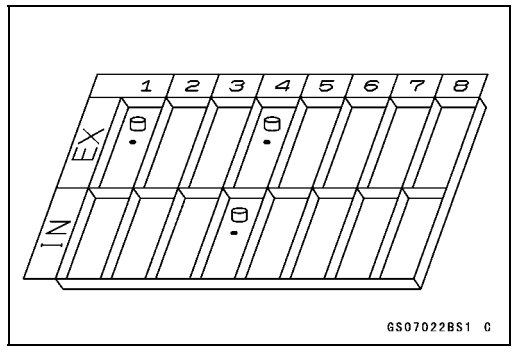

Periodic Maintenance Procedures

○Besides the standard shims in the valve clearance adjustment charts, the following shims may be installed at the factory. Although they are not available as spare parts, they can be used to adjust valve clearance.

Adjustment Shims

Thickness
2.675 mm
2.725 mm
2.775 mm
2.825 mm
2.875 mm
2.925 mm
2.975 mm
3.025 mm
3.075 mm
3.125 mm
3.175 mm
3.225 mm
3.275 mm
3.325 mm

- Clean the shim to remove any dust or oil.
- Measure the thickness of the removed shim [A].

VALVE CLEARANCE ADJUSTMENT CHART INTAKE VALVE

	PRESENT SHIM (Example)																					
PART No. (92180-)	1014	1016	1018	1020	1022	1024	1026	1028	1030	1032	1034	1036	1038	1040	1042	1044	1046	1048	1050	1052	1054
MARK	50	55	60	65	70	75	80	85	90	95	00	05	10	15	20	25	30	35	40	45	50
THICKNESS (mm)	2.50	2.55	2.60	2.65	2.70	2.75	2.80	2.85	2.90	2.95	3.00	3.05	3.10	3.15	3.20	3.25	3.30	3.35	3.40	3.45	3.50
0.00~0.02	–	–	–	–	2.50	2.55	2.60	2.65	2.70	2.75	2.80	2.85	2.90	2.95	3.00	3.05	3.10	3.15	3.20	3.25	3.30
0.03~0.07	–	–	–	2.50	2.55	2.60	2.65	2.70	2.75	2.80	2.85	2.90	2.95	3.00	3.05	3.10	3.15	3.20	3.25	3.30	3.35
0.08~0.12	–	–	2.50	2.55	2.60	2.65	2.70	2.75	2.80	2.85	2.90	2.95	3.00	3.05	3.10	3.15	3.20	3.25	3.30	3.35	3.40
0.13~0.14	–	2.50	2.55	2.60	2.65	2.70	2.75	2.80	2.85	2.90	2.95	3.00	3.05	3.10	3.15	3.20	3.25	3.30	3.35	3.40	3.45
0.15~0.24	SPECIFIED CLEARANCE/NO CHANGE REQUIRED																				
0.25~0.27	2.55	2.60	2.65	2.70	2.75	2.80	2.85	2.90	2.95	3.00	3.05	3.10	3.15	3.20	3.25	3.30	3.35	3.40	3.45	3.50	
0.28~0.32	2.60	2.65	2.70	2.75	2.80	2.85	2.90	2.95	3.00	3.05	3.10	3.15	3.20	3.25	3.30	3.35	3.40	3.45	3.50		
0.33~0.37	2.65	2.70	2.75	2.80	2.85	2.90	2.95	3.00	3.05	3.10	3.15	3.20	3.25	3.30	3.35	3.40	3.45	3.50			
0.38~0.42	2.70	2.75	2.80	2.85	2.90	2.95	3.00	3.05	3.10	3.15	3.20	3.25	3.30	3.35	3.40	3.45	3.50				
0.43~0.47 (Example)	2.75	2.80	2.85	2.90	2.95	3.00	3.05	3.10	3.15	3.20	3.25	3.30	3.35	3.40	3.45	3.50					
0.48~0.52	2.80	2.85	2.90	2.95	3.00	3.05	3.10	3.15	3.20	3.25	3.30	3.35	3.40	3.45	3.50						
0.53~0.57	2.85	2.90	2.95	3.00	3.05	3.10	3.15	3.20	3.25	3.30	3.35	3.40	3.45	3.50							
0.58~0.62	2.90	2.95	3.00	3.05	3.10	3.15	3.20	3.25	3.30	3.35	3.40	3.45	3.50								
0.63~0.67	2.95	3.00	3.05	3.10	3.15	3.20	3.25	3.30	3.35	3.40	3.45	3.50									
0.68~0.72	3.00	3.05	3.10	3.15	3.20	3.25	3.30	3.35	3.40	3.45	3.50										
0.73~0.77	3.05	3.10	3.15	3.20	3.25	3.30	3.35	3.40	3.45	3.50											
0.78~0.82	3.10	3.15	3.20	3.25	3.30	3.35	3.40	3.45	3.50												
0.83~0.87	3.15	3.20	3.25	3.30	3.35	3.40	3.45	3.50													
0.88~0.92	3.20	3.25	3.30	3.35	3.40	3.45	3.50														
0.93~0.97	3.25	3.30	3.35	3.40	3.45	3.50															
0.98~1.02	3.30	3.35	3.40	3.45	3.50																
1.03~1.07	3.35	3.40	3.45	3.50																	
1.08~1.12	3.40	3.45	3.50																		
1.13~1.17	3.45	3.50																			
1.18~1.22	3.50																				

VALVE CLEARANCE MEASUREMENT (Example)

INSTALL THE SHIM OF THIS THICKNESS (mm)

GS07122BW3 C

1. Measure the clearance (when engine is cold).
2. Check present shim size.
3. Match clearance in vertical column with present shim size in horizontal column.
4. Install the shim specified where the lines intersect. This shim will give the proper clearance.

Example: Present shim is **2.95 mm**
Measured clearance is **0.45 mm**
Replace **2.95 mm** shim with **3.20 mm** shim.

5. Remeasure the valve clearance and readjust if necessary.

Periodic Maintenance Procedures

VALVE CLEARANCE ADJUSTMENT CHART EXHAUST VALVE

	PRESENT SHIM									↓Example											
PART No. (92180-)	1014	1016	1018	1020	1022	1024	1026	1028	1030	1032	1034	1036	1038	1040	1042	1044	1046	1048	1050	1052	1054
MARK	50	55	60	65	70	75	80	85	90	95	00	05	10	15	20	25	30	35	40	45	50
THICKNESS (mm)	2.50	2.55	2.60	2.65	2.70	2.75	2.80	2.85	2.90	2.95	3.00	3.05	3.10	3.15	3.20	3.25	3.30	3.35	3.40	3.45	3.50
VALVE CLEARANCE MEASUREMENT																					
0.00~0.04	–	–	–	–	–	2.50	2.55	2.60	2.65	2.70	2.75	2.80	2.85	2.90	2.95	3.00	3.05	3.10	3.15	3.20	3.25
0.05~0.09	–	–	–	–	2.50	2.55	2.60	2.65	2.70	2.75	2.80	2.85	2.90	2.95	3.00	3.05	3.10	3.15	3.20	3.25	3.30
0.10~0.14	–	–	–	2.50	2.55	2.60	2.65	2.70	2.75	2.80	2.85	2.90	2.95	3.00	3.05	3.10	3.15	3.20	3.25	3.30	3.35
0.15~0.19	–	–	2.50	2.55	2.60	2.65	2.70	2.75	2.80	2.85	2.90	2.95	3.00	3.05	3.10	3.15	3.20	3.25	3.30	3.35	3.40
0.20~0.21	–	2.50	2.55	2.60	2.65	2.70	2.75	2.80	2.85	2.90	2.95	3.00	3.05	3.10	3.15	3.20	3.25	3.30	3.35	3.40	3.45
0.22~0.31	SPECIFIED CLEARANCE/NO CHANGE REQUIRED																				
←Example 0.32~0.34	2.55	2.60	2.65	2.70	2.75	2.80	2.85	2.90	2.95	3.00	3.05	3.10	3.15	3.20	3.25	3.30	3.35	3.40	3.45	3.50	
0.35~0.39	2.60	2.65	2.70	2.75	2.80	2.85	2.90	2.95	3.00	3.05	3.10	3.15	3.20	3.25	3.30	3.35	3.40	3.45	3.50		
0.40~0.44	2.65	2.70	2.75	2.80	2.85	2.90	2.95	3.00	3.05	3.10	3.15	3.20	3.25	3.30	3.35	3.40	3.45	3.50			
←0.45~0.49	2.70	2.75	2.80	2.85	2.90	2.95	3.00	3.05	3.10	3.15	3.20	3.25	3.30	3.35	3.40	3.45	3.50				
0.50~0.54	2.75	2.80	2.85	2.90	2.95	3.00	3.05	3.10	3.15	3.20	3.25	3.30	3.35	3.40	3.45	3.50					
0.55~0.59	2.80	2.85	2.90	2.95	3.00	3.05	3.10	3.15	3.20	3.25	3.30	3.35	3.40	3.45	3.50						
0.60~0.64	2.85	2.90	2.95	3.00	3.05	3.10	3.15	3.20	3.25	3.30	3.35	3.40	3.45	3.50							
0.65~0.69	2.90	2.95	3.00	3.05	3.10	3.15	3.20	3.25	3.30	3.35	3.40	3.45	3.50								
0.70~0.74	2.95	3.00	3.05	3.10	3.15	3.20	3.25	3.30	3.35	3.40	3.45	3.50									
0.75~0.79	3.00	3.05	3.10	3.15	3.20	3.25	3.30	3.35	3.40	3.45	3.50										
0.80~0.84	3.05	3.10	3.15	3.20	3.25	3.30	3.35	3.40	3.45	3.50											
0.85~0.89	3.10	3.15	3.20	3.25	3.30	3.35	3.40	3.45	3.50												
0.90~0.94	3.15	3.20	3.25	3.30	3.35	3.40	3.45	3.50													
0.95~0.99	3.20	3.25	3.30	3.35	3.40	3.45	3.50														
1.00~1.04	3.25	3.30	3.35	3.40	3.45	3.50															
1.05~1.09	3.30	3.35	3.40	3.45	3.50																
1.10~1.14	3.35	3.40	3.45	3.50																	
1.15~1.19	3.40	3.45	3.50																		
1.20~1.24	3.45	3.50																			
1.25~1.29	3.50																				

INSTALL THE SHIM OF THIS THICKNESS (mm)

GS07120BW3 C

1. Measure the clearance (when engine is cold).
2. Check present shim size.
3. Match clearance in vertical column with present shim size in horizontal column.
4. Install the shim specified where the lines intersect. This shim will give the proper clearance.

Example: Present shim is **2.95 mm.**
Measured clearance is **0.47 mm.**
Replace **2.95 mm** shim with **3.15 mm** shim.

5. Remeasure the valve clearance and readjust if necessary.

Periodic Maintenance Procedures

NOTICE
Be sure to remeasure the clearance after selecting a shim according to the table. If the clearance is out of the specified range, use the additional shim.

○If there is no valve clearance, use a shim that is a few sizes smaller, and remeasure the valve clearance.

- When installing the shim, face the marked side toward the valve lifter. At this time, apply engine oil to the shim or the valve lifter to keep the shim in place during camshaft installation.

NOTICE
Do not put shim stock under the shim. This may cause the shim to pop out at high rpm, causing extensive engine damage. **Do not grind the shim. This may cause it to fracture, causing extensive engine damage.**

- Apply engine oil to the valve lifter surface and install the lifter.
- Install the camshafts (see Camshaft Installation in the Engine Top End chapter).
- Recheck the valve clearance and readjust if necessary.
- Install the removed parts (see appropriate chapters).

Air Suction System Damage Inspection

- Remove:
  Fuel Tank (see Fuel Tank Removal in the Fuel System (DFI) chapter)
  Fuel Hose (see Fuel Hose Replacement)
  Air Cleaner Housing (see Air Cleaner Housing Removal in the Fuel System (DFI) chapter)
- Bring the air switching valve hose end [A] to the outside of the frame.
- Reinstall the air cleaner housing (see Air Cleaner Housing Installation in the Fuel System (DFI) chapter).

- Connect the fuel pump lead connector [A].
- Using the extension tube [B], connect the fuel tank to the throttle body assy.

Special Tool - Extension Tube: 57001-1578

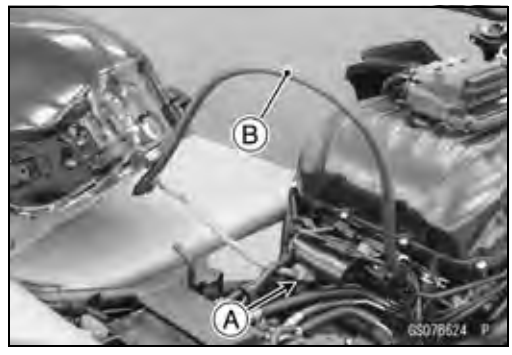

- Start the engine and run it at idle speed.
- Plug the air switching valve hose end [A] with your finger and feel vacuum pulsing in the hose.

★If there is no vacuum pulsation, check the hose line for leak. If there is no leak, check the air switching valve (see Air Switching Valve Unit Test in the Electrical System chapter) or air suction valve (see Air Suction Valve Inspection in the Engine Top End chapter).

Clutch

Clutch Operation Inspection

- Pull the clutch lever just enough to take up the free play [A].
- Measure the gap between the lever and the lever holder.

★If the gap is too wide, the clutch may not release fully. If the gap is too narrow, the clutch may not engage fully. In either case, adjust it.

Clutch Lever Free Play
Standard: 2 ~ 3 mm (0.08 ~ 0.12 in.)

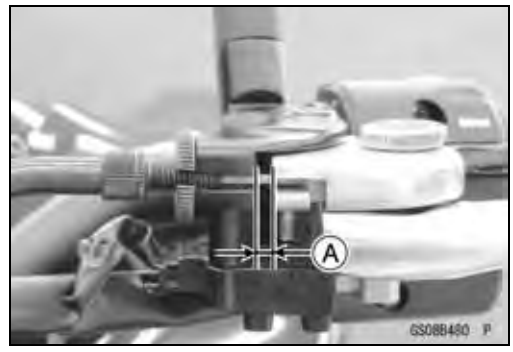

⚠ WARNING

The engine and exhaust system get extremely hot during normal operation and can cause serious burns. Never touch the engine or exhaust pipe during clutch adjustment.

- Loosen the locknut [A].
- Turn the adjuster [B] so that 5 ~ 6 mm (0.20 ~ 0.24 in.) [C] of threads is visible.

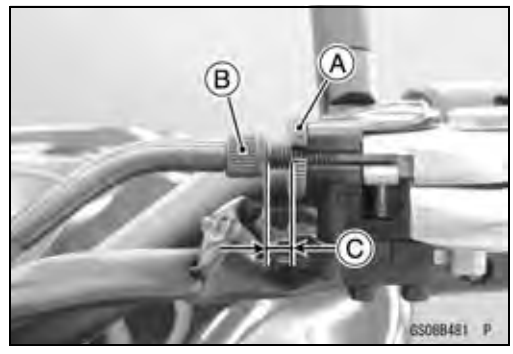

- Slide the dust cover [A] at the clutch cable lower end out of place.
- Loosen both adjusting nuts [B] at the clutch cover as far as they will go.
- Pull the clutch outer cable [C] tight and tighten the adjusting nuts against the clutch cover [D].
- Slip the dust cover back onto place.
- Turn the adjuster at the clutch lever until the free play is correct.

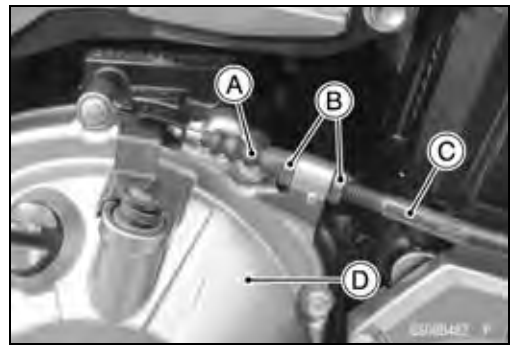

● Push the release lever [A] toward the front of the motorcycle until it becomes hard to turn.
○At this time, the release lever should have the proper angle shown.
60° [B]
★If the angle is wrong, check the clutch and release parts for wear.

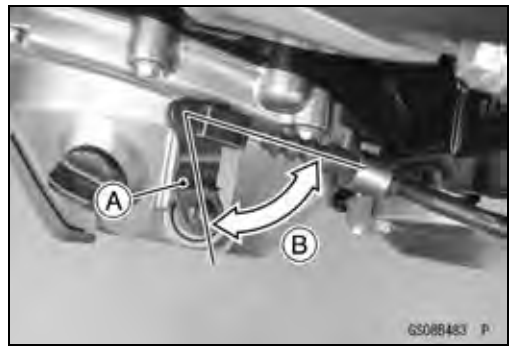

⚠ WARNING

Too much cable play can prevent clutch disengagement and cause an accident resulting in serious injury or death. When adjusting the clutch or replacing the cable, be sure the upper end of the clutch outer cable is fully seated in its fitting, or it could slip into place later, creating enough cable play to prevent clutch disengagement.

● After the adjustment, start the engine and check that the clutch does not slip and that it releases properly.

Engine Lubrication System

Engine Oil Change

● Situate the motorcycle so that it is vertical after warming up the engine.
● Remove the engine oil drain bolt [A] to drain the oil.
○The oil in the oil filter can be drained by removing the filter (see Oil Filter Replacement).
● Replace the drain bolt gasket [B] with a new one.
● Tighten the drain bolt.

Torque - Engine Oil Drain Bolt: 29 N·m (3.0 kgf·m, 21 ft·lb)

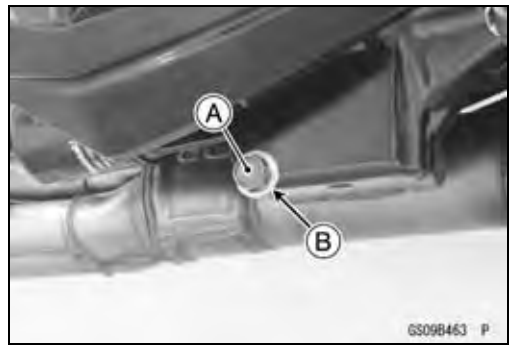

● Remove the oil filler plug [A].

Periodic Maintenance Procedures

● Pour in the specified type and amount of oil.

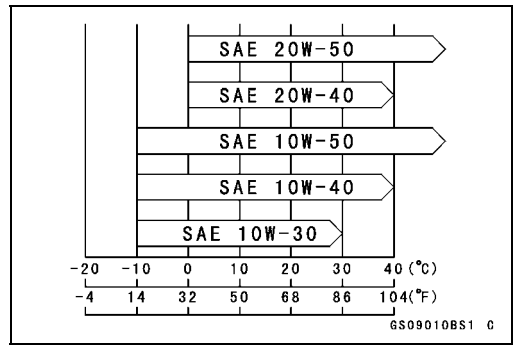

Recommended Engine Oil

Type: **API SG, SH, SJ, SL or SM with JASO MA, MA1 or MA2**

Viscosity: **SAE 10W-40**

Capacity: **3.2 L (3.4 US qt) (When filter is not removed.)**

3.6 L (3.8 US qt) (When filter is removed.)

4.0 L (4.2 US qt) (When engine is completely dry.)

NOTE

○*Do not add any chemical additive to the oil.Oils fulfilling the above requirements are fully formulated and provide adequate lubrication for both the engine and the clutch.*

○*Although 10W-40 engine oil is the recommended oil for most conditions, the oil viscosity may need to be changed to accommodate atmospheric conditions in your riding area.*

● Replace the O-ring of the oil filler plug with a new one.
● Apply grease to the new O-ring.
● Install the oil filler plug.

Torque - Oil Filler Plug: Hand-tighten

● Check the oil level (see Oil Level Inspection in the Engine Lubrication System chapter).

Oil Filter Replacement

● Drain the engine oil (see Engine Oil Change).
● Remove the oil filter with the oil filter wrench [A].

Special Tool - Oil Filter Wrench: 57001-1249

● Replace the filter with a new one.
● Apply grease to the gasket [A] before installation.
● Tighten the filter with the oil filter wrench.

Special Tool - Oil Filter Wrench: 57001-1249

Torque - Oil Filter: 17 N·m (1.7 kgf·m, 13 ft·lb)

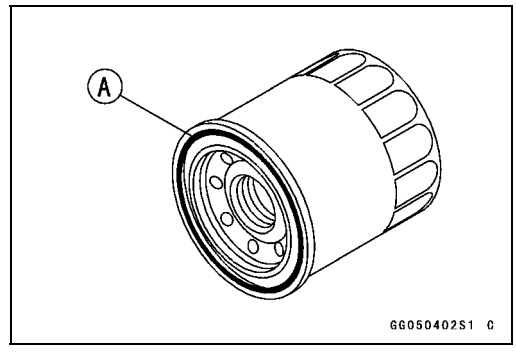

NOTE

○*Hand tightening of the oil filter can not be allowed since it does not reach to this tightening torque.*

● Pour in the specified type and capacity of oil (see Engine Oil Change).

Periodic Maintenance Procedures

Wheels/Tires

Air Pressure Inspection

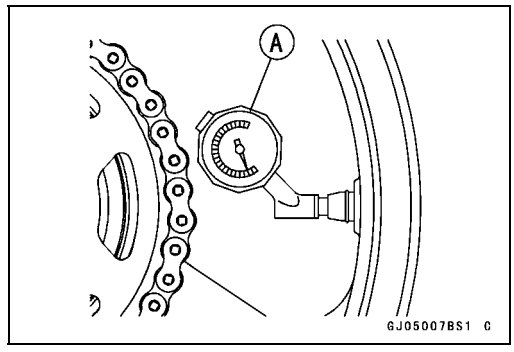

- Remove the air valve cap.
- Measure the tire air pressure with an air pressure gauge [A] when the tires are cold (that is, when the motorcycle has not been ridden more than a mile during the past 3 hours).
- Install the air valve cap.
- ★Adjust the tire air pressure according to the specifications if necessary.

Air Pressure (when Cold)

Front:	**Up to 180 kg (397 lb) load:**
	250 kPa (2.50 kgf/cm², 36 psi)
Rear:	**Up to 180 kg (397 lb) load:**
	290 kPa (2.90 kgf/cm², 42 psi)

Wheels and Tires Inspection

Wheel/Tire Damage Inspection

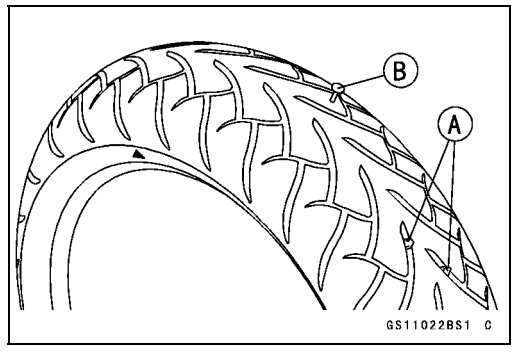

- Remove any imbedded stones [A] or other foreign particles [B] from tread.
- Visually inspect the tire for cracks and cuts, and replace the tire if necessary. Swelling or high spots indicate internal damage, requiring tire replacement.
- Visually inspect the wheel for cracks, cuts and dents damage.
- ★If any damage is found, replace the wheel if necessary.

Tire Tread Wear Inspection

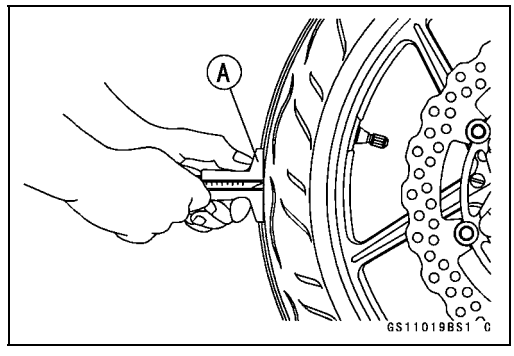

As the tire tread wears down, the tire becomes more susceptible to puncture and failure. An accepted estimate is that 90% of all tire failures occur during the last 10% of tread life (90% worn). So it is false economy and unsafe to use the tires until they are bald.

- Measure the tread depth at the center of the tread with a depth gauge [A]. Since the tire may wear unevenly, take measurement at several places.
- ★If any measurement is less than the service limit, replace the tire (see Tire Removal/Installation in the Wheels/Tires chapter).

Tread Depth

Standard:	
Front	**4.0 mm (0.16 in.)**
Rear	**5.3 mm (0.21 in.)**
Service Limit:	
Front	**1 mm (0.04 in.)**
	(AT, CH, DE) 1.6 mm (0.06 in.)
Rear	**2 mm (0.08 in.) (Up to 130 km/h (80 mph))**
	3 mm (0.12 in.) (Over 130 km/h (80 mph))

Periodic Maintenance Procedures

⚠ WARNING

Some replacement tires may adversely affect handling and cause an accident resulting in serious injury or death. To ensure proper handling and stability, use only the recommended standard tires for replacement, inflated to the standard pressure.

NOTE

○*Most countries may have their own regulations a minimum tire tread depth: be sure to follow them.*

○*Check and balance the wheel when a tire is replaced with a new one.*

Wheel Bearing Damage Inspection

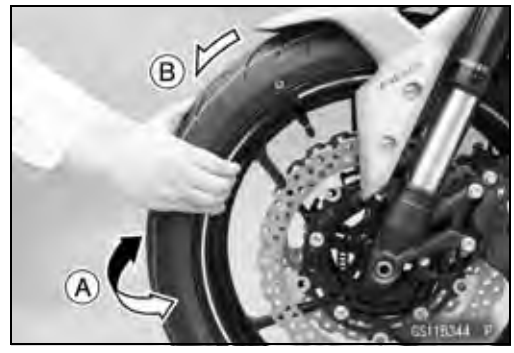

- Raise the front wheel off the ground with a suitable stand.
- Turn the handlebars all the way to the right or left.
- Inspect the roughness of the front wheel bearing by pushing and pulling [A] the wheel.
- Spin [B] the front wheel lightly, and check for smoothly turn, roughness, binding or noise.

★If roughness, binding or noise is found, remove the front wheel and inspect the wheel bearing (see Front Wheel Removal, Hub Bearing Inspection in the Wheels/Tires chapter).

- Raise the rear wheel off the ground with the stand (see Rear Wheel Removal in the Wheels/Tires chapter).
- Inspect the roughness of the rear wheel bearing by pushing and pulling [A] the wheel.
- Spin [B] the rear wheel lightly, and check for smoothly turn, roughness, binding or noise.

★If roughness, binding or noise is found, remove the rear wheel and inspect the wheel bearing (see Rear Wheel Removal, Hub Bearing Inspection in the Wheels/Tires chapter) and coupling (see Coupling Bearing Inspection in the Final Drive chapter).

Periodic Maintenance Procedures

Final Drive

Drive Chain Lubrication Condition Inspection

Lubrication is necessary after riding through rain or on wet roads, or any time that the chain appears dry.

Use a lubricant for sealed chains to prevent deterioration of chain seals. If the chain is especially dirty, clean it using a cleaner for sealed chains following the instructions supplied by the chain cleaner manufacturer.

NOTICE

The O-rings between the side plates seal in the lubricant between the pin and the bushing. To avoid damaging the O-rings and resultant loss of lubricant, observe the following rules.
Use only chain cleaner for cleaning of the O-ring of the drive chain. Any other cleaning solution such as gasoline will cause deterioration and swelling of the O-ring. Immediately blow the chain dry with compressed air after cleaning. Complete cleaning and drying the chain within 10 minutes.

- Apply chain oil to the sides of the rollers so that oil will penetrate to the rollers and bushings. Apply the oil to the O-rings so that the O-rings will be coated with oil.
- Wipe off any excess oil.
  Oil Applied Areas [A]
  O-rings [B]
- Wipe off lubricant that gets on the tire surface.

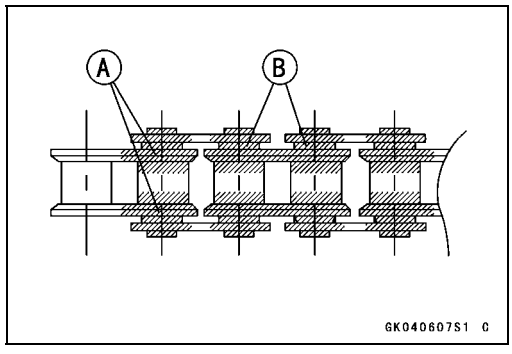

Drive Chain Slack Inspection

NOTE

○*Check the slack with the motorcycle setting on its side stand.*
○*Clean the chain if it is dirty, and lubricate it if it appears dry.*

- Check the wheel alignment (see Wheel Alignment Inspection).
- Rotate the rear wheel to find the position where the chain is tightest.
- Measure the vertical movement (chain slack) [A] midway between the sprockets.

★If the chain slack exceeds the standard, adjust it.

Chain Slack
Standard: 25 ~ 35 mm (1.0 ~ 1.4 in.)

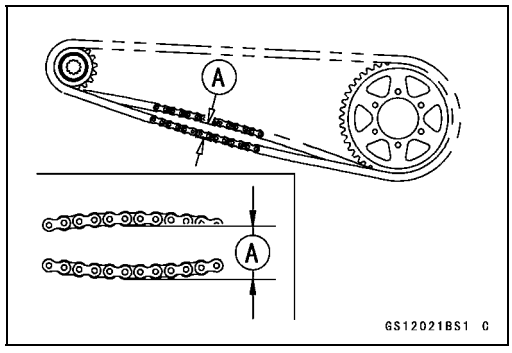

Periodic Maintenance Procedures

Drive Chain Slack Adjustment

● Remove the rubber cap [A].

● Remove the cotter pin [A], and loosen the rear axle nut [B].
● Loosen the both chain adjuster locknuts [C].
★If the chain is too loose, turn out the right and left chain adjusters [D] evenly.
★If the chain is too tight, turn in the right and left chain adjusters evenly, and kick the wheel forward.
● Turn both chain adjusters evenly until the drive chain has the correct amount of slack. To keep the chain and wheel properly aligned, the notch [E] on the left wheel alignment indicator [F] should align with the same swingarm mark or position [G] that the right indicator notch aligns with.

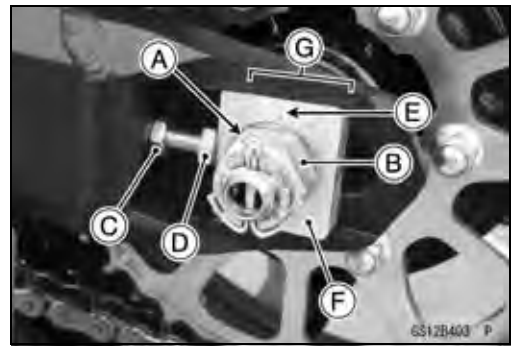

⚠ WARNING

Misalignment of the wheel will result in abnormal wear and may result in an unsafe riding condition. Be sure the wheel is properly aligned.

● Tighten both chain adjuster locknuts securely.
● Tighten:

Torque - Rear Axle Nut: 108 N·m (11.0 kgf·m, 79.7 ft·lb)

● Turn the wheel, measure the chain slack again at the tightest position, and readjust if necessary.

● Insert a new cotter pin [A].

NOTE

○*When inserting the cotter pin, if the slots in the nut do not align with the cotter pin hole in the axle, tighten the nut clockwise [B] up to next alignment.*
○*It should be within 30 degrees.*
○*Loosen once and tighten again when the slot goes past the nearest hole.*

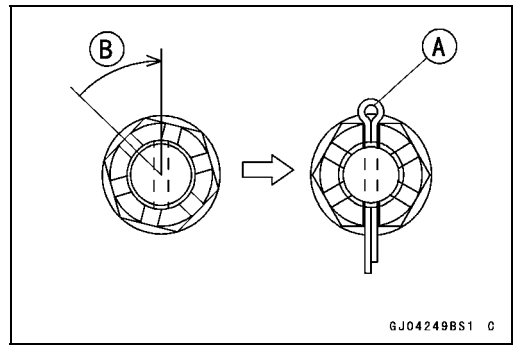

Periodic Maintenance Procedures

● Bend the cotter pin [A] along the nut [B].

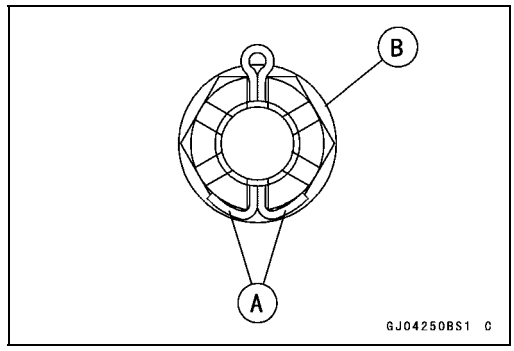

⚠ WARNING

A loose axle nut can lead to an accident resulting in serious injury or death. Tighten the axle nut to the proper torque and install a new cotter pin.

● Install the rubber cap.

Wheel Alignment Inspection

● Remove the rubber cap [A].

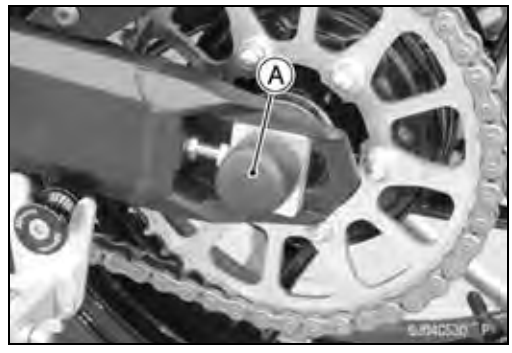

● Check that the notch [A] on the left alignment indicator [B] aligns with the same swingarm mark or position [C] that the right alignment indicator notch aligns with.

★If they are not, adjust the chain slack and align the wheel alignment (see Drive Chain Slack Adjustment).

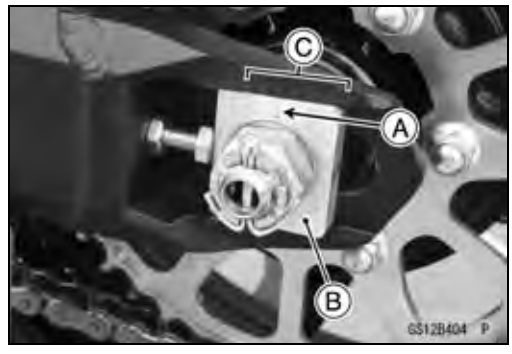

NOTE

○*Wheel alignment can be also checked using the straightedge or string method.*

⚠ WARNING

Misalignment of the wheel will result in abnormal wear and may result in an unsafe riding condition. Be sure the wheel is properly aligned.

● Install the rubber cap.

Drive Chain Wear Inspection

● Remove the mud guard (see Mud Guard Removal in the Frame chapter).

● Rotate the rear wheel to inspect the drive chain for damaged rollers, and loose pins and links.

★If there is any irregularity, replace the drive chain.

★Lubricate the drive chain if it appears dry.

● Stretch the chain taut by hanging a 10 kg (22 lb) weight [A] on the chain.

● Measure the length of 20 links [B] on the straight part [C] of the chain from the pin center of the 1st pin to the pin center of the 21st pin. Since the chain may wear unevenly, take measurements at several places.

★If any measurements exceed the service limit, replace the chain. Also, replace the front and rear sprockets when the drive chain is replaced.

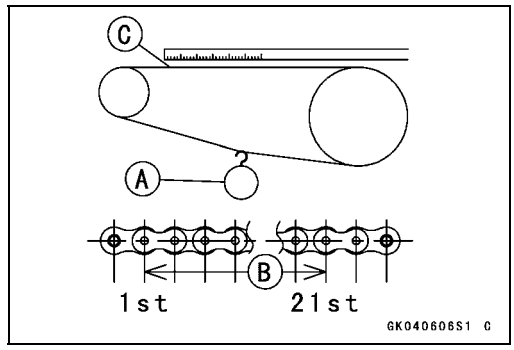

Drive Chain 20-link Length

Standard: 317.5 ~ 318.2 mm (12.50 ~ 12.53 in.)

Service Limit: 319 mm (12.6 in.)

Periodic Maintenance Procedures

⚠ WARNING

A chain that breaks or jumps off the sprockets could snag on the engine sprocket or lock the rear wheel, severely damaging the motorcycle and causing it to go out of control. Inspect the chain for damage and proper adjustment before each ride. If chain wear exceeds the service limit, replace it with the standard chain.

Standard Chain

Make: ENUMA

Type: EK525RMX3/3D

Link: 114 links

- Install the mud guard (see Mud Guard Installation in the Frame chapter).

Chain Guide Wear Inspection

- Remove the swingarm (see Swingarm Removal in the Suspension chapter).
- Visually inspect the chain guide [A].

★Replace the chain guide if it shows any signs of abnormal wear or damage.

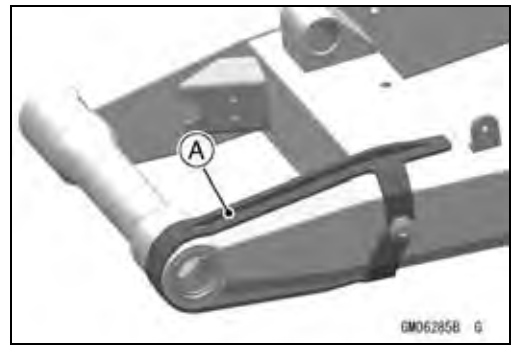

Periodic Maintenance Procedures

Brakes

Brake System Inspection

Brake Fluid Leak (Brake Hose and Pipe) Inspection

- Remove the mud guard (see Mud Guard Removal in the Frame chapter).
- For ABS equipped models, remove the fuel tank (see Fuel Tank Removal in the Fuel System (DFI) chapter).
- Apply the brake lever or pedal and inspect the brake fluid leak from the brake hoses [A], fittings [B] and pipes [C] (ABS equipped models).

★If the brake fluid leaked from any position, inspect or replace the problem part.

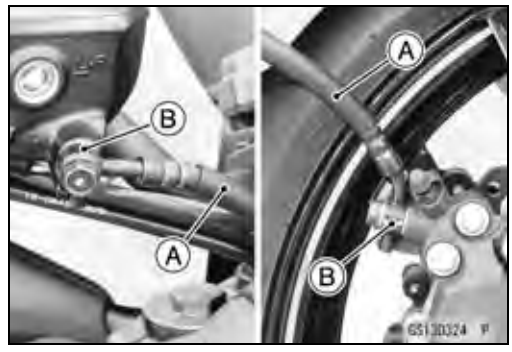

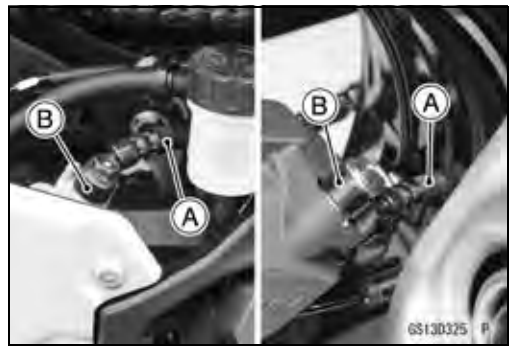

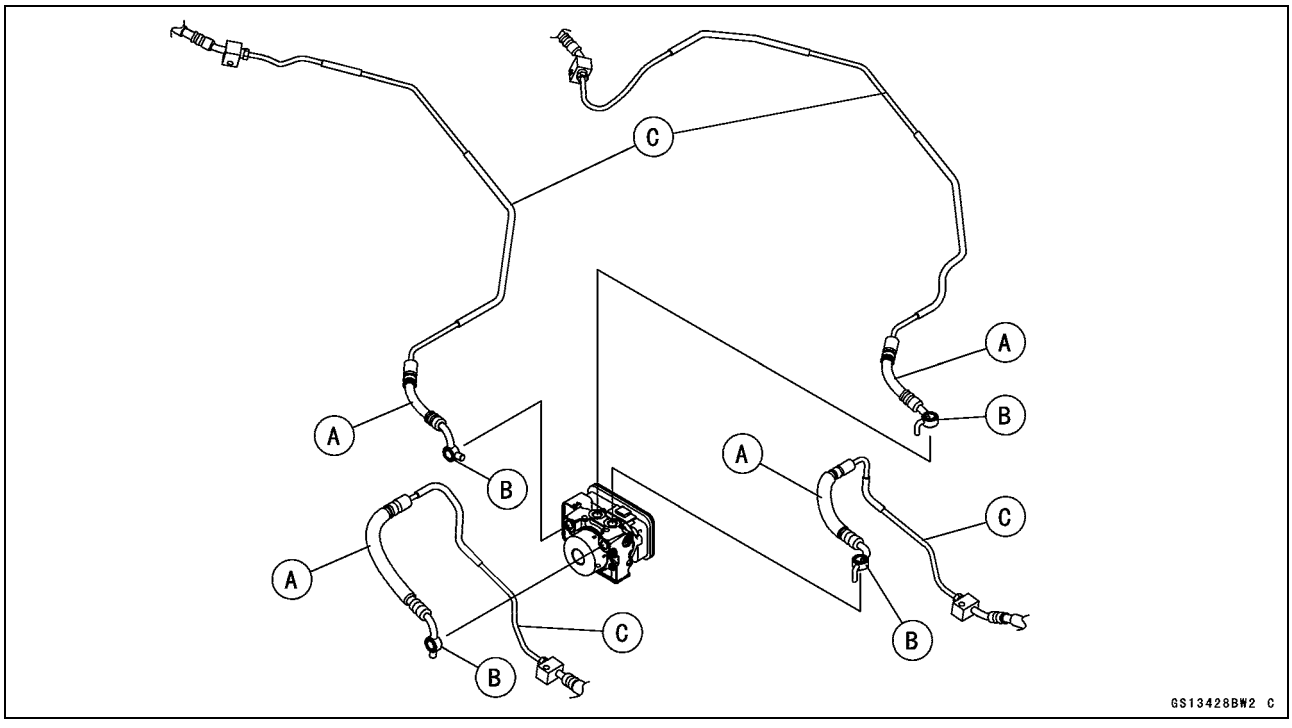

Periodic Maintenance Procedures

Brake Hose and Pipe Damage and Installation Condition Inspection

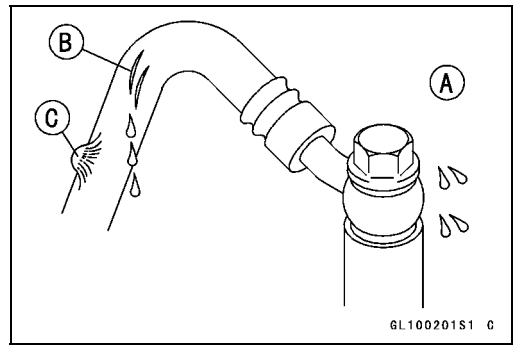

- Remove the mud guard (see Mud Guard Removal in the Frame chapter).
- For ABS equipped models, remove the following parts:
  Fuel Tank (see Fuel Tank Removal in the Fuel System (DFI) chapter)
  Frame Sub Cover (see Frame Sub Cover Removal in the Frame chapter)
- Inspect the brake hoses, pipe and fittings for deterioration, cracks and signs of leakage.

○The high pressure inside the brake line can cause fluid to leak [A] or the hose, pipe (ABS equipped models) to burst if the line is not properly maintained. Bend and twist the rubber hose while examining it.

★Replace the hose and pipe (ABS equipped models) if any crack [B], bulge [C] or leakage is noticed.

★Tighten any brake hose banjo bolts and brake pipe banjo bolts (ABS equipped models).

Torque - Brake Hose Banjo Bolts: 25 N·m (2.5 kgf·m, 18 ft·lb)
Brake Pipe Banjo Bolts (ABS Equipped Models): 33 N·m (3.4 kgf·m, 24 ft·lb)

- Inspect the brake hose and pipe routing.

★If any brake hose and pipe routing is incorrect, run the brake hose and pipe according to Cable, Wire, and Hose Routing section in the Appendix chapter.

Brake Operation Inspection

- Inspect the operation of the front and rear brake by running the vehicle on the dry road.

★If the brake operation is insufficiency, inspect the brake system.

⚠ WARNING

When test riding the vehicle, be aware of surrounding traffic for your safety.

Brake Fluid Level Inspection

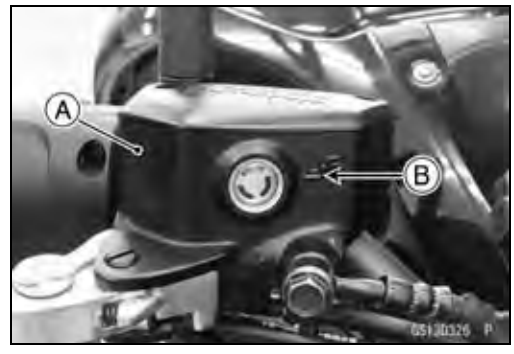

- Check that the brake fluid level in the front brake reservoir [A] is above the lower level line [B].

NOTE

○*Hold the reservoir horizontal by turning the handlebars when checking brake fluid level.*

Periodic Maintenance Procedures

★If the fluid level is lower than the lower level line, fill the reservoir to the upper level line [A].

● Tighten:

Torque - Front Brake Reservoir Cap Screws: 1.5 N·m (0.15 kgf·m, 13 in·lb)

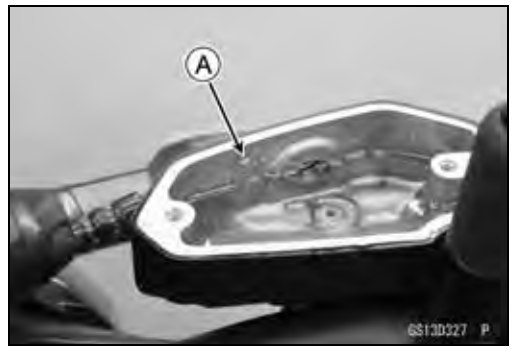

● Check that the brake fluid level in the rear brake reservoir [A] is above the lower level line [B].

★If the fluid level is lower than the lower level line, fill the reservoir to the upper level line [C].

○Remove:

Right Frame Cover (see Frame Cover Removal in the Frame chapter)

Screw

Stopper

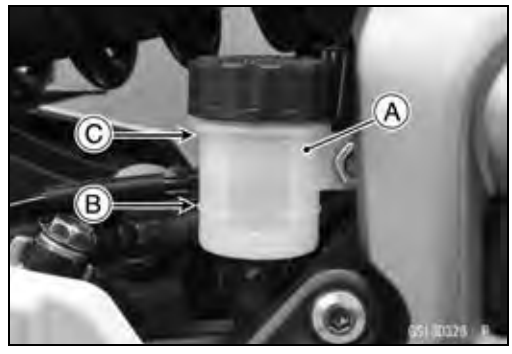

⚠ WARNING

Mixing brands and types of brake fluid can reduce the brake system's effectiveness and cause an accident resulting in injury or death. Do not mix two brands of brake fluid. Change the brake fluid in the brake line completely if the brake fluid must be refilled but the type and brand of the brake fluid that is already in the reservoir are unidentified.

Recommended Disc Brake Fluid
Grade: DOT4

● Follow the procedure below to install the rear brake reservoir cap correctly.

○First, tighten the brake reservoir cap [A] clockwise [B] by hand until slight resistance is felt indicating that the cap is seated on the reservoir body [C], then tighten the cap an additional 1/6 turn [D] while holding the brake reservoir body.

● Install the stopper and tighten the screw.

● Install the right frame cover (see Frame Cover Installation in the Frame chapter).

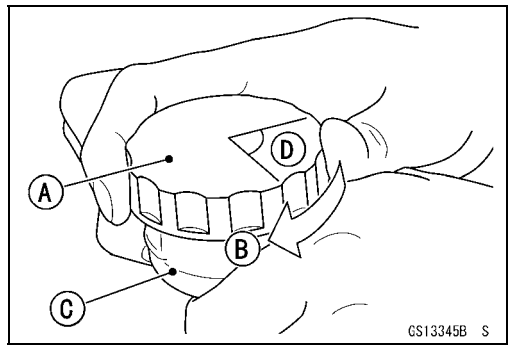

Brake Fluid Change

NOTE

○*The procedure to change the front brake fluid is as follows. Changing the rear brake fluid is the same as for the front brake.*

Periodic Maintenance Procedures

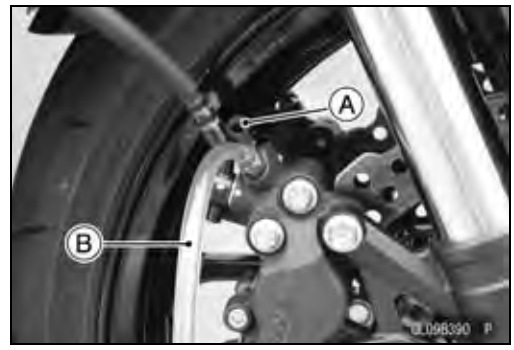

- Level the brake reservoir.
- Remove the reservoir cap, diaphragm plate and diaphragm.
- Remove the rubber cap [A] from the bleed valve on the caliper.
- Attach a clear plastic hose [B] to the bleed valve, and run the other end of the hose into a container.
- Fill the reservoir with fresh specified brake fluid.

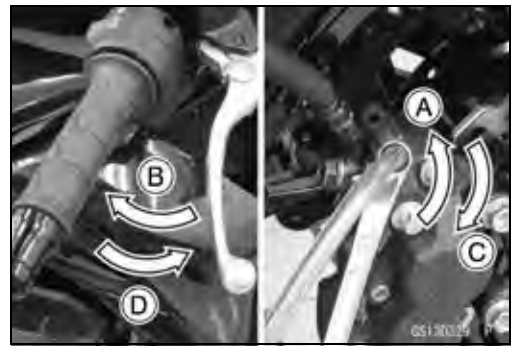

- Change the brake fluid.

○Repeat this operation until fresh brake fluid comes out from the plastic hose or the color of the fluid changes.

1. Open the bleed valve [A].
2. Apply the brake and hold it [B].
3. Close the bleed valve [C].
4. Release the brake [D].

NOTE

○*The fluid level must be checked often during the changing operation and replenished with fresh brake fluid. If the fluid in the reservoir runs out any time during the changing operation, the brakes will need to be bled since air will have entered the brake line.*

○*Front Brake: Repeat the above steps for the other caliper.*

- Remove the clear plastic hose.
- Install the diaphragm, diaphragm plate and reservoir cap.
- Tighten:

Torque - Front Brake Reservoir Cap Screws: 1.5 N·m (0.15 kgf·m, 13 in·lb)

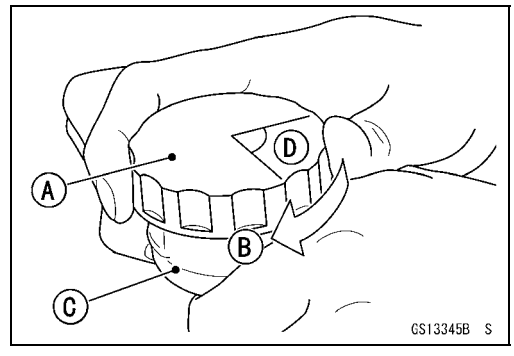

- Follow the procedure below to install the rear brake reservoir cap correctly.

○First, tighten the rear brake reservoir cap [A] clockwise [B] by hand until slight resistance is felt indicating that the cap is seated on the reservoir body [C], then tighten the cap an additional 1/6 turn [D] while holding the brake reservoir body.

○Install the stopper and tighten the screw.

- Tighten the bleed valve, and install the rubber cap.

Torque - Bleed Valves: 5.4 N·m (0.55 kgf·m, 48 in·lb)

- After changing the fluid, check the brake for good braking power, no brake drag, and no fluid leakage.

★If necessary, bleed the air from the lines.

Periodic Maintenance Procedures

Brake Hose and Pipe Replacement

NOTICE
Brake fluid quickly damages painted plastic surfaces; any spilled fluid should be completely washed away immediately.

● Remove:
Headlight Assy (see Upper Fairing Removal in the Frame chapter)
Mud Guard (see Mud Guard Removal in the Frame chapter)
Brake Hose Banjo Bolts [A]
● Release the brake hoses from the clamps.
● When removing the brake hoses [B], note the following.
○Take care not to spill the brake fluid on the painted or plastic parts.
○Temporarily secure the end of the brake hose to some high place to keep fluid loss to a minimum.
○Immediately wash away any brake fluid that spills.
● When installing the brake hoses, note the following.
○Avoid sharp bending, kinking, flatting or twisting, and run the hoses according to Cable, Wire, and Hose Routing section in the Appendix chapter.
○There are washers on each side of the brake hose fitting. Replace them with new ones.
○Tighten:

Torque - Brake Hose Banjo Bolts: 25 N·m (2.5 kgf·m, 18 ft·lb)

● Fill the brake line after installing the brake hose (see Brake Fluid Change).

Periodic Maintenance Procedures

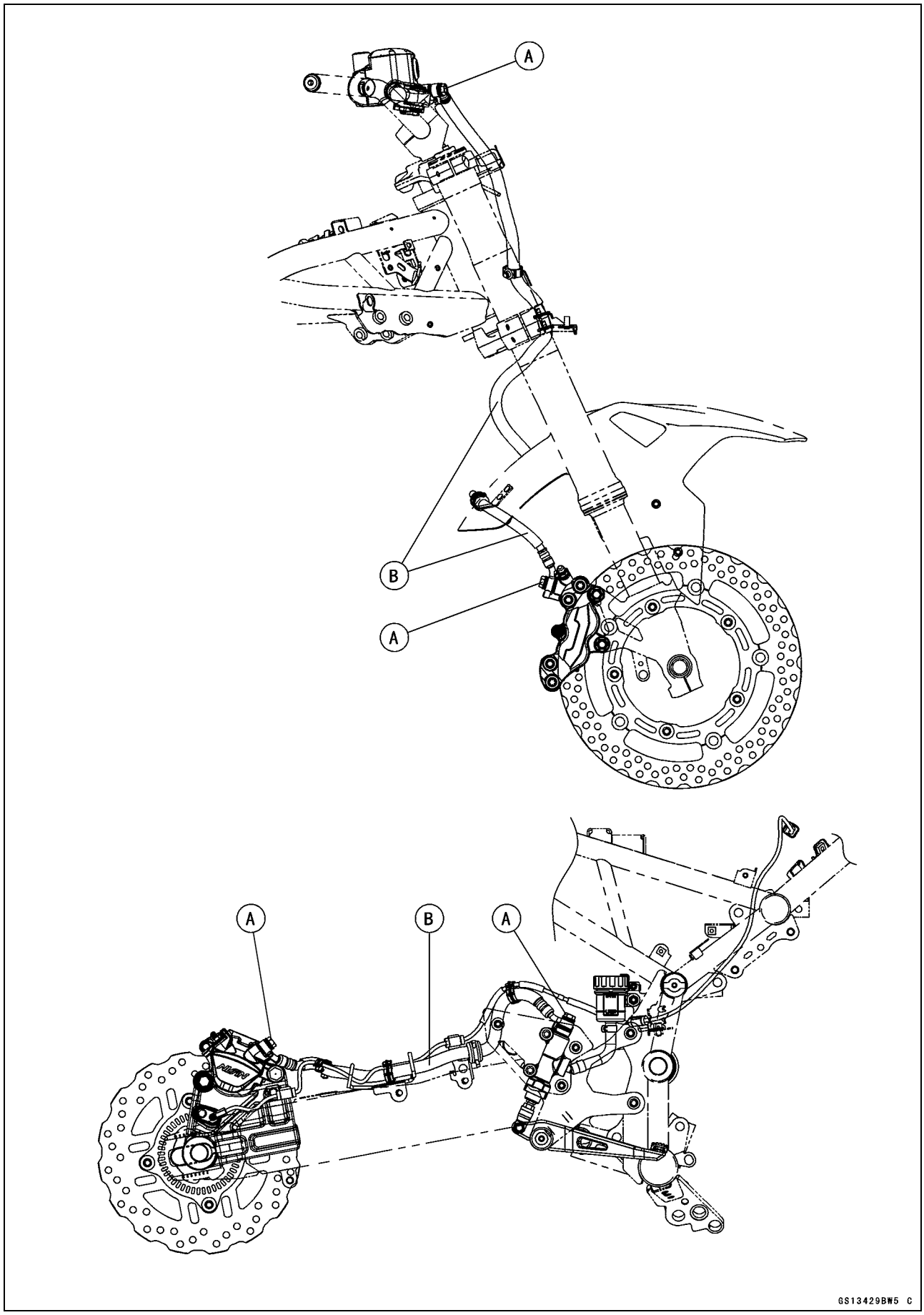

Periodic Maintenance Procedures

● For ABS equipped models; note the following.

NOTE

○*When removing the brake pipes and hoses on the hydraulic unit, remove them according to each assembly of the exploded view in the Brakes chapter.*

● Remove:
Headlight Assy (see Upper Fairing Removal in the Frame chapter)
Air Cleaner Housing (see Air Cleaner Housing Removal in the Fuel System (DFI) chapter)
Inner Covers (see Inner Cover Removal in the Frame chapter)
Mud Guard (see Mud Guard Removal in the Frame chapter)
Frame Sub Cover (see Frame Sub Cover Removal in the Frame chapter)
Brake Pipe Banjo Bolts [A]
Brake Hose Banjo Bolts [B]
Bolts [C]

● Release the brake hoses from the clamps.

● There are washers on each side of the brake hose and pipe fitting. Replace them with new ones when installing.

NOTE

○*Tighten the brake pipe banjo bolt at both ends of the brake pipe temporarily and then tighten them to the specified torque.*

● Install the brake pipes and brake hoses to the specified angle (see Cable, Wire, and Hose Routing section in the Appendix chapter).

● Tighten:

Torque - Brake Hose Banjo Bolts: 25 N·m (2.5 kgf·m, 18 ft·lb)
Brake Pipe Banjo Bolts: 33 N·m (3.4 kgf·m, 24 ft·lb)

● Fill the brake line after installing the brake hose and pipe (see Brake Fluid Change).

Periodic Maintenance Procedures

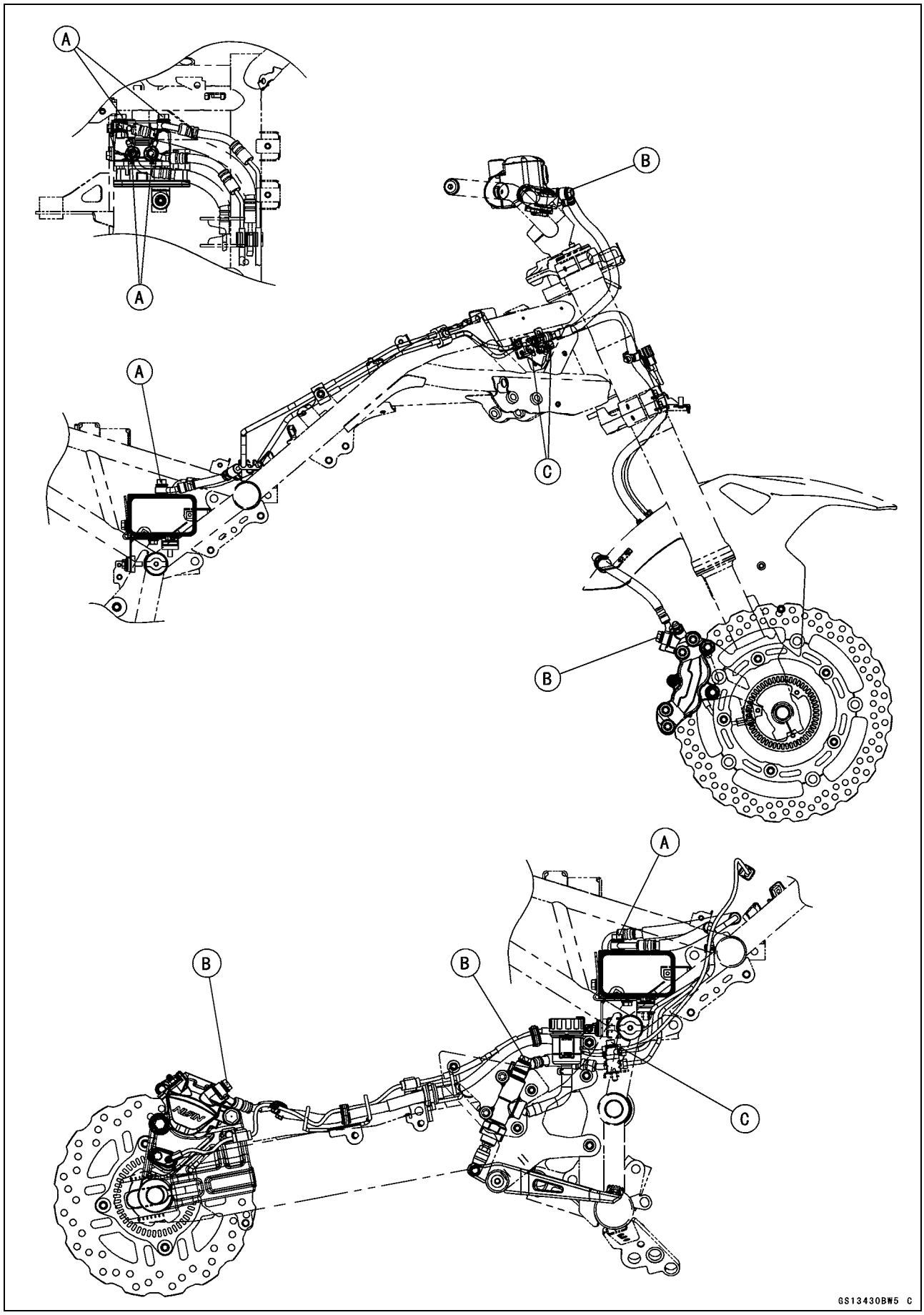

Periodic Maintenance Procedures

Master Cylinder Rubber Parts Replacement

Front Master Cylinder Disassembly

- Remove the front master cylinder (see Front Master Cylinder Removal in the Brakes chapter).
- Remove:
  Front Brake Reservoir Cap Screws [A]
  Reservoir Cap [B]
  Diaphragm Plate [C]
  Diaphragm [D]
- Unscrew the locknut [E] and pivot bolt [F], and remove the brake lever.
- Remove the dust cover [G] and circlip [H].

  Special Tool - Inside Circlip Pliers: 57001-143
- Pull out the piston assembly [I].

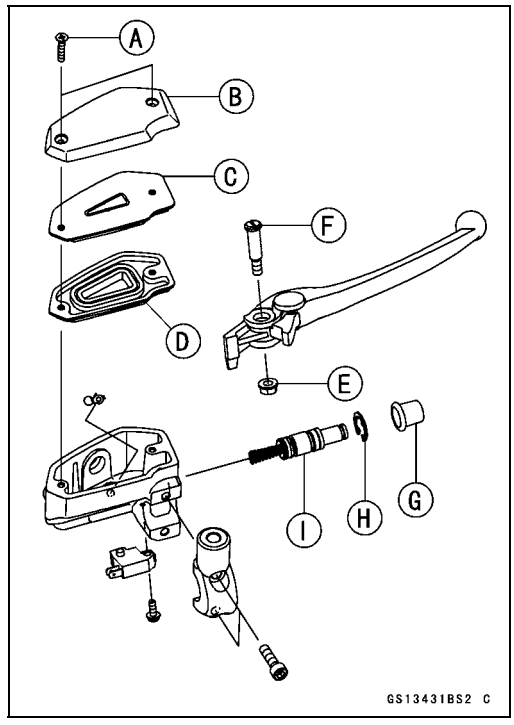

NOTICE
Do not remove the secondary cup from the piston since removal will damage it.

- Replace:
  Diaphragm [D]
  Dust Cover [G]
  Circlip [H]
  Piston Assembly [I]

Rear Master Cylinder Disassembly

- Remove the rear master cylinder (see Rear Master Cylinder Removal in the Brakes chapter).
- Remove the circlip [A], connector [B] and O-ring [C].

  Special Tool - Inside Circlip Pliers: 57001-143
- Slide the dust cover [D] out of place, and remove the circlip [E].
- Pull out the push rod assembly [F].
- Remove the piston assembly [G].

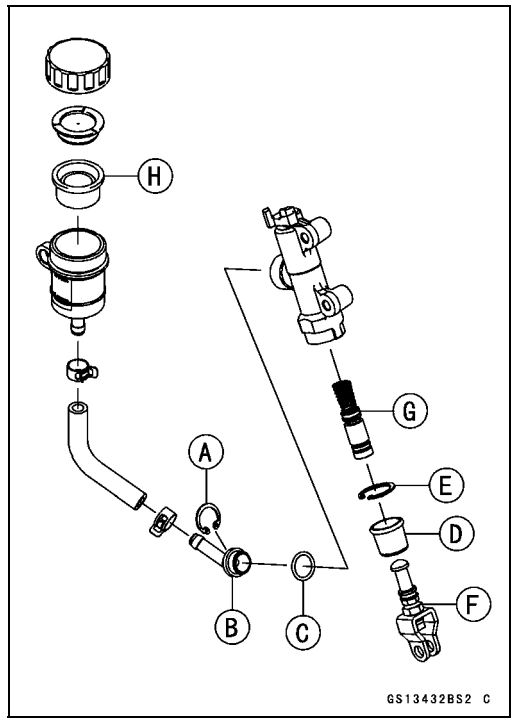

NOTICE
Do not remove the secondary cup from the piston since removal will damage it.

- Replace:
  Circlip [A]
  O-ring [C]
  Dust Cover [D]
  Circlip [E]
  Piston Assembly [G]
  Diaphragm [H]

Periodic Maintenance Procedures

Master Cylinder Assembly

- Before assembly, clean all parts including the master cylinder with brake fluid or alcohol.

NOTICE
Except for the disc pads and disc, use only disc brake fluid, isopropyl alcohol, or ethyl alcohol for cleaning brake parts. Do not use any other fluid for cleaning these parts. Gasoline, engine oil, or any other petroleum distillate will cause deterioration of the rubber parts. Oil spilled on any part will be difficult to wash off completely, and will eventually deteriorate the rubber used in the disc brake.

- Apply brake fluid to the new parts and to the inner wall of the cylinder.
- Take care not to scratch the piston or the inner wall of the cylinder.
- Apply silicone grease to the followings.

  Front: Brake Lever Pivot Bolt

  Rear: Dust Cover of Push Rod Assembly

- For the front master cylinder, tighten the brake lever pivot bolt and the locknut.

Torque - Brake Lever Pivot Bolt: 1.0 N·m (0.10 kgf·m, 8.9 in·lb)
Brake Lever Pivot Bolt Locknut: 5.9 N·m (0.60 kgf·m, 52 in·lb)

Caliper Rubber Parts Replacement

Front Caliper Disassembly

- Loosen the front caliper pad pin [A], banjo bolt [B] and front caliper assembly bolts [C] and tighten them loosely.
- Remove:
  Front Caliper [D] (see Front Caliper Removal in the Brakes chapter)
  Brake Pads (see Front Brake Pad Removal in the Brakes chapter)
  Front Caliper Assembly Bolts
  Oil Seal

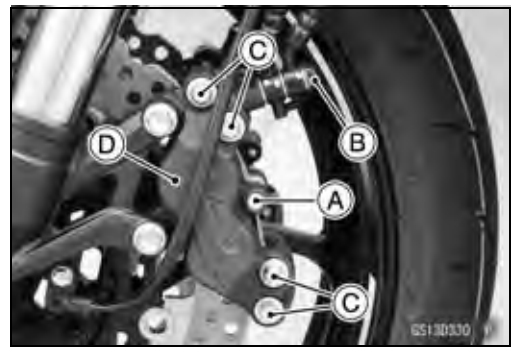

Periodic Maintenance Procedures

● Using compressed air, remove the pistons. One way to remove the pistons is as follows.

○Install a rubber gasket [A] and a wooden board [B] more than 10 mm (0.4 in.) thick on the caliper half, and fasten them together with a suitable bolt and nut as shown. Leave one of the oil passages [C] open.

○Lightly apply compressed air [D] to the oil passage until the pistons hit the rubber gasket. Block the hose joint opening [E] during this operation if the caliper half has the opening.

Bolt [F] and Nut

Push down [G].

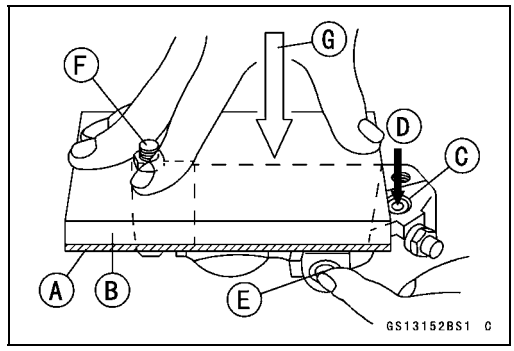

⚠ WARNING

The piston in the brake caliper can crush hands and fingers. Never place your hand or fingers in front of the piston.

○Pull out the pistons by hand.

● When compressed air is not used, using the brake caliper piston pliers [A] remove the pistons [B].

Special Tool - Brake Caliper Piston Pliers (φ26 ~ φ36): 57001-1862

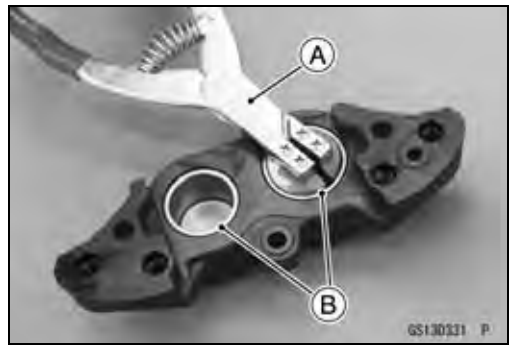

● Remove the dust seals [A] and fluid seals [B].

● Remove the bleed valve [C] and rubber cap [D].

● Repeat the previous step to remove the pistons from the other side of the caliper body.

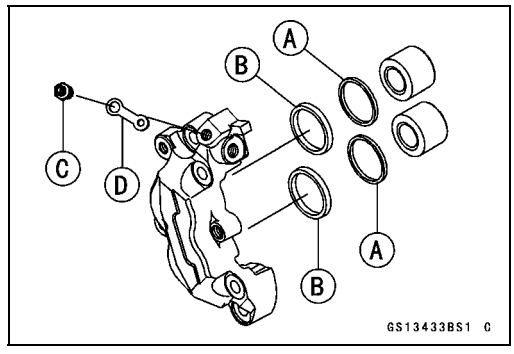

Front Caliper Assembly

● Clean the caliper parts except for the pads.

NOTICE

For cleaning the parts, use only disc brake fluid, isopropyl alcohol, or ethyl alcohol.

● Install the bleed valve and rubber cap.

● Tighten:

Torque - Bleed Valves: 5.4 N·m (0.55 kgf·m, 48 in·lb)

Periodic Maintenance Procedures

● Replace the fluid seals [A] with new ones.
○Apply silicone grease to the fluid seals, and install them into the cylinders by hand.
● Replace the dust seals [B] with new ones if they are damaged.
○Apply silicone grease to the dust seals, and install them into the cylinders by hand.

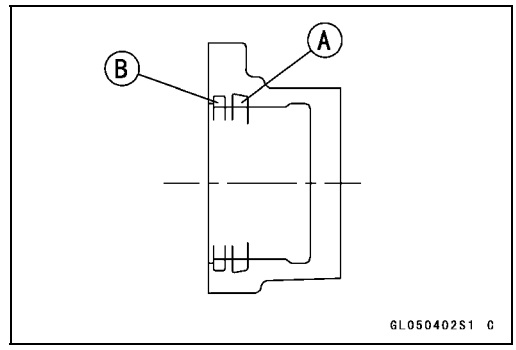

● Replace the oil seal [A].
● Apply brake fluid to the outside of the pistons, and push them into each cylinder by hand.
● Be sure to install the oil seal.
● Apply a non-permanent locking agent to the threads of the front caliper assembly bolts, and tighten them.

Torque - Front Caliper Assembly Bolts: 22 N·m (2.2 kgf·m, 16 ft·lb)

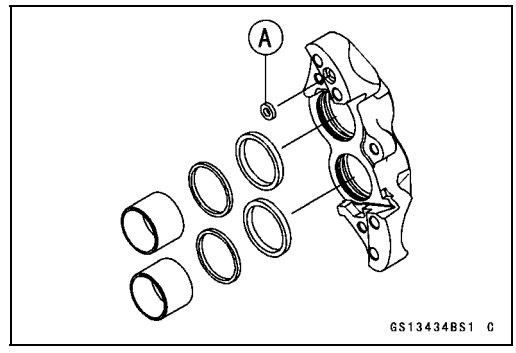

● Install the removed parts (see appropriate chapters).
● Wipe up any spilled brake fluid on the caliper with wet cloth.

Rear Caliper Disassembly

● Remove:
Rear Caliper (see Rear Caliper Removal in the Brakes chapter)
Brake Pads (see Rear Brake Pad Removal in the Brakes chapter)
Pad Spring [A]
Sleeve [B]
Friction Boot [C]

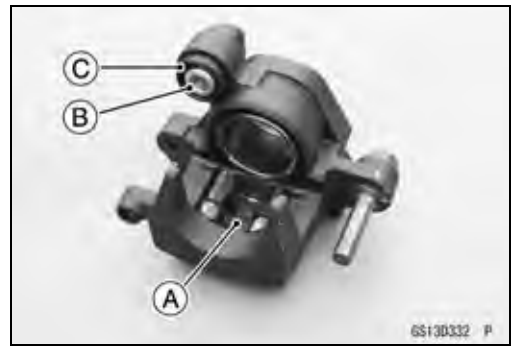

● Using compressed air, remove the piston.
○Cover the caliper opening with a clean heavy cloth [A].
○Remove the piston by lightly applying compressed air [B] to where the brake line fits into the caliper.

⚠ WARNING

The piston in the brake caliper can crush hands and fingers. Never place your hand or fingers in front of the piston.

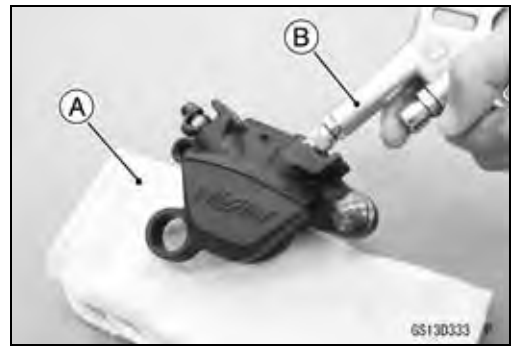

Periodic Maintenance Procedures

● When compressed air is not used, using the brake caliper piston pliers [A] remove the piston [B].

Special Tool - Brake Caliper Piston Pliers (φ26 ~ φ36): 57001-1862

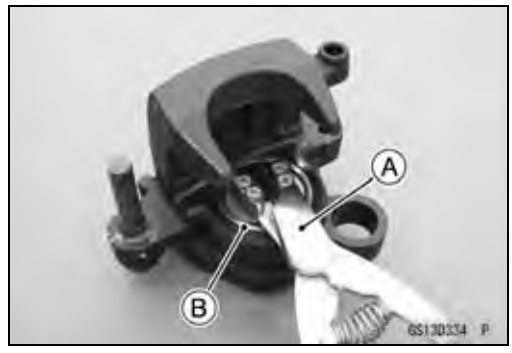

● Remove the dust seal and fluid seal.
● Remove the bleed valve and rubber cap.

Rear Caliper Assembly

● Clean the caliper parts except for the pads.

NOTICE
For cleaning the parts, use only disc brake fluid, isopropyl alcohol, or ethyl alcohol.

● Install the bleed valve and rubber cap.
● Tighten:

Torque - Bleed Valve: 5.4 N·m (0.55 kgf·m, 48 in·lb)

● Replace the fluid seal [A] with a new one.
○Apply silicone grease to the fluid seal, and install it into the cylinder by hand.
● Replace the dust seal [B] with a new one.
○Apply silicone grease to the dust seal, and install it into the cylinder by hand.

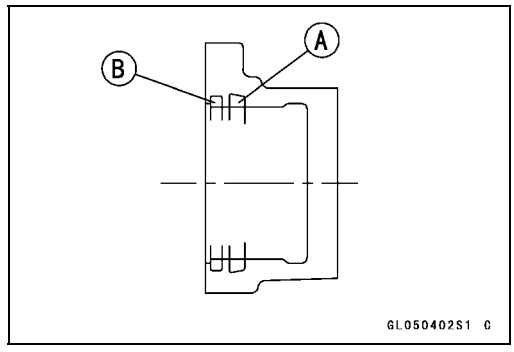

● Replace the friction boot [A] with a new one and install it.
● Install the sleeve [B].
○Apply a silicone grease to the sleeve.

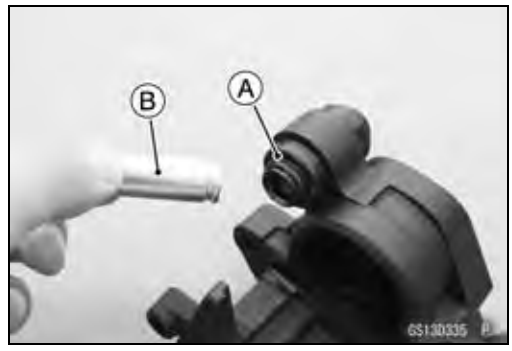

Periodic Maintenance Procedures

- Apply brake fluid to the outside of the piston [A], and push it into the cylinder by hand.
- Install the pad spring [B] in the caliper as shown.
- Apply silicone grease to the rear caliper pin bolt [C].

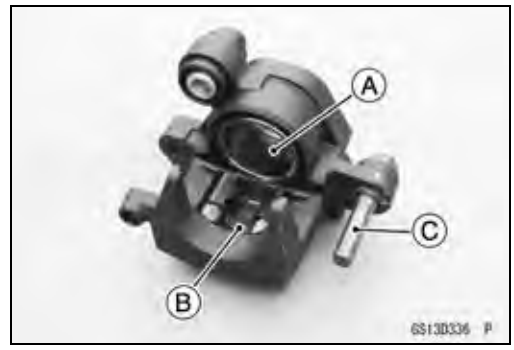

- Replace the dust boot [A] with a new one if it is damaged.
- Install the removed parts (see appropriate chapters).
- Wipe up any spilled brake fluid on the caliper with wet cloth.

Brake Pad Wear Inspection

- Remove the brake pads (see Front/Rear Brake Pad Removal in the Brakes chapter).
- Check the lining thickness [A] of the pads in each caliper.

★If the lining thickness of either pad is less than the service limit [B], replace both pads in the caliper as a set.

Front Brake Pad [C]
Rear Brake Pad [D]

Pad Lining Thickness

Standard:

Front	**4 mm (0.16 in.)**
Rear	**5 mm (0.20 in.)**

Service Limit:

Front	**1 mm (0.04 in.)**
Rear	**1.4 mm (0.06 in.)**

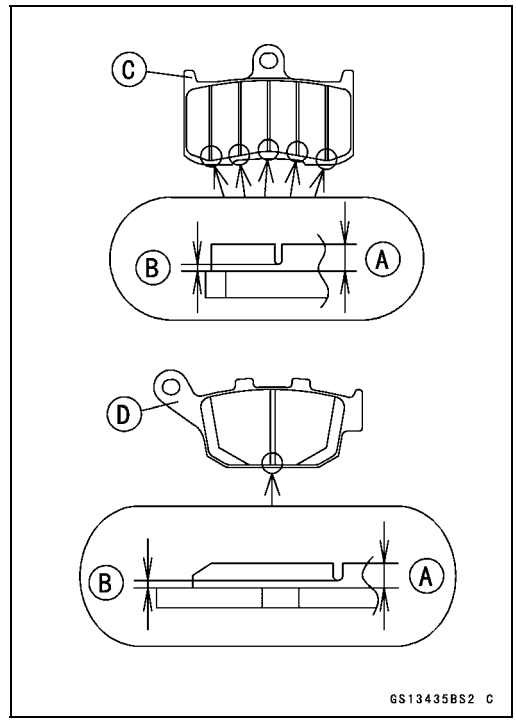

Brake Light Switch Operation Inspection

- Turn the ignition switch on.
- The brake light (LED) [A] should go on when the brake lever is applied or after the brake pedal is depressed about 6 mm (0.24 in.).

Periodic Maintenance Procedures

★If it does not, adjust the brake light switch.
- Remove the right front footpeg bracket bolts [A].
- Pull the right footpeg bracket [B] outward.

- While holding the switch body, turn the adjusting nut to adjust the switch.
  Switch Body [A]
  Adjusting Nut [B]
  Light sooner as the body rises [C]
  Light later as the body lowers [D]

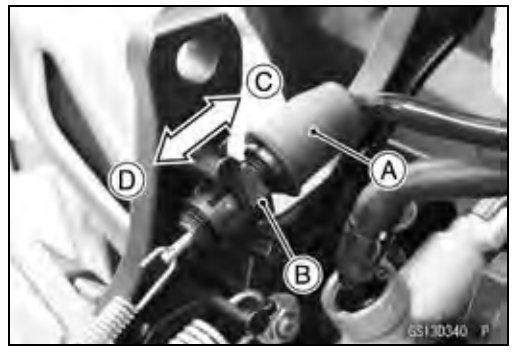

NOTICE

To avoid damaging the electrical connections inside the switch, be sure that the switch body does not turn during adjustment.

- Tighten:

Torque - Front Footpeg Bracket Bolts: 25 N·m (2.5 kgf·m, 18 ft·lb)

★If it does not go on, inspect or replace the following parts.
Battery (see Charging Condition Inspection in the Electrical System chapter)
Brake Light (LED) (see Tail/Brake Light (LED) Removal/Installation in the Electrical System chapter)
Main Fuse 30 A and Brake Light/Horn Fuse 7.5 A (see Fuse Inspection in the Electrical System chapter)
Front Brake Light Switch [A] (see Switch Inspection in the Electrical System chapter)
Rear Brake Light Switch (see Switch Inspection in the Electrical System chapter)
Harness (see Wiring Inspection in the Electrical System chapter)

Suspension

Suspension System Inspection

Front Forks/Rear Shock Absorber Operation Inspection

- Pump the forks down and up [A] 4 or 5 times, and inspect the smooth stroke.

★If the forks do not smoothly or noise is found, inspect the fork oil level or fork clamps (see Front Fork Oil Change in the Suspension chapter).

Periodic Maintenance Procedures

- Pump the rear seat down and up [A] 4 or 5 times, and inspect the smooth stroke.

★If the shock absorber does not smoothly stroke or noise is found, inspect the oil leak (see Rear Shock Absorber Oil Leak Inspection).

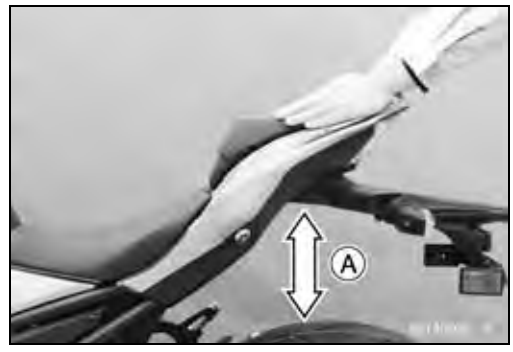

Front Fork Oil Leak Inspection

- Visually inspect the front forks [A] for oil leakage.

★Replace any defective parts, if necessary.

Rear Shock Absorber Oil Leak Inspection

- Visually inspect the rear shock absorber [A] for oil leakage.

★If the oil leakage is found on it, replace the rear shock absorber with a new one.

Rocker Arm Operation Inspection

- Pump the seat down and up 4 or 5 times, and inspect the smooth stroke.

★If the rocker arms [A] do not smoothly stroke or noise is found, inspect the fasteners and bearings (see Rocker Arm/Tie-Rod Bearing, Sleeve Inspection in the Suspension chapter).

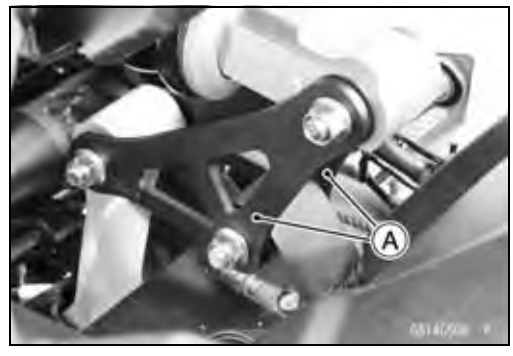

Tie-Rod Operation Inspection

- Pump the seat down and up 4 or 5 times, and inspect the smooth stroke.

★If the tie-rod [A] does not smoothly stroke or noise is found, inspect the fasteners and tie-rod bearings (see Rocker Arm/Tie-Rod Bearing, Sleeve Inspection in the Suspension chapter).

Periodic Maintenance Procedures

Steering

Steering Play Inspection

- Raise the front wheel off the ground with the suitable stand.
- With the front wheel pointing straight ahead, alternately tap each end of the handlebars. The front wheel should swing fully left and right from the force of gravity until the fork hits the stop.

★If the wheel binds or catches before the stop, the steering is too tight.

- Feel for steering looseness by pushing and pulling [A] the forks.

★If you feel looseness, the steering is too loose.

NOTE

○*The cables and wiring will have some effect on the motion of the fork which must be taken into account.*

○*Be sure the leads and cables are properly routed.*

○*The bearings must be in good condition and properly lubricated in order for any test to be valid.*

Steering Play Adjustment

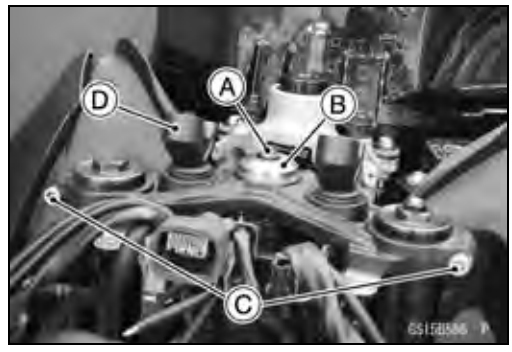

- Remove:
  Headlight Assy (see Upper Fairing Removal in the Frame chapter)
  Ignition Switch Cover (see Ignition Switch Cover Removal in the Frame chapter)
  Handlebars (see Handlebar Removal in the Steering chapter)
  Steering Stem Head Bolt Plug [A]
  Steering Stem Head Bolt [B] and Washer
- Loosen the upper front fork clamp bolts [C].
- Remove the stem head [D].

- Bend the claws [A] of the claw washer straighten.
- Remove:
  Steering Stem Locknut [B]
  Claw Washer

- Adjust the steering using the steering stem nut wrench [A].

Special Tool - Steering Stem Nut Wrench: 57001-1100

★If the steering is too tight, loosen the stem nut [B] a fraction of a turn.

★If the steering is too loose, tighten the stem nut a fraction of a turn.

NOTE

○*Turn the stem nut 1/8 turn at time maximum.*

Periodic Maintenance Procedures

○You may adjust the steering using the adjustable hook wrench [A].

Special Tool - Adjustable Hook Wrench: 57001-1863

- Install the claw washer [A] so that its bent side [B] faces upward, and engage the bent claws with the grooves of stem locknut [C].
- Hand tighten the stem locknut until it touches the claw washer.
- Hand tighten the stem locknut clockwise until the claws are aligned with the grooves (ranging from 2nd to 4th) of stem nut [D], and bend the 2 claws downward [E].
- Install the steering stem head.
- Install the washer, and temporarily tighten the stem head bolt.

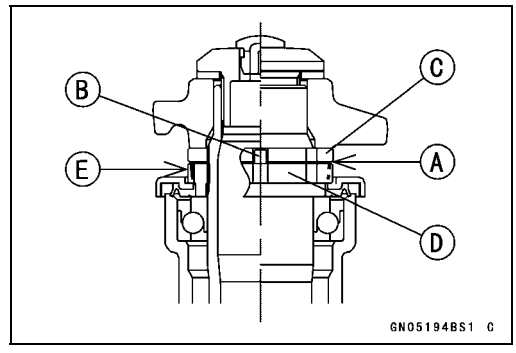

NOTE

○*Tighten the upper front fork clamp bolts first, next the stem head bolt.*

Torque - Upper Front Fork Clamp Bolts: 20 N·m (2.0 kgf·m, 15 ft·lb)
Steering Stem Head Bolt: 108 N·m (11.0 kgf·m, 79.7 ft·lb)

⚠ WARNING

If the handlebars do not turn to the steering stop, they may cause an accident resulting in injury or death. Be sure the cables, harnesses and hoses are routed properly and do not interfere with handlebar movement (see Cable, Wire, and Hose Routing section in the Appendix chapter).

- Check the steering again.

★If the steering is still too tight or too loose, repeat the adjustment.

- Install the removed parts (see appropriate chapters).

Periodic Maintenance Procedures

Steering Stem Bearing Lubrication

- Remove the steering stem (see Stem, Stem Bearing Removal in the Steering chapter).
- Using a high flash-point solvent, wash the upper and lower ball bearings [A] in the cages, and wipe the upper and lower outer races, which are press-fitted into the frame head pipe, clean off grease and dirt.
- Visually check the outer races and the ball bearings.
- ★Replace the bearing assemblies if they show wear or damage.
- Pack the upper and lower ball bearings in the cages with grease, and apply a light coat of grease to the upper and lower outer races.
- Install the steering stem (see Stem, Stem Bearing Installation in the Steering chapter).
- Adjust the steering (see Steering Play Adjustment).

Periodic Maintenance Procedures

Electrical System

Lights and Switches Operation Inspection

First Step

- Set the gear position in the neutral position.
- Turn the ignition switch on.
- The following lights should go on according to below table.

City Light (LED) [A]	Goes on
Taillight (LED) [B]	Goes on
License Plate Light [C]	Goes on
Meter Panel Illumination (LED) [D]	Goes on
Meter Panel LCD [E]	Goes on
Green Neutral Indicator Light (LED) [F]	Goes on
Oil Pressure Warning Indicator [G] and Red Warning Indicator Light (LED) [H]	Goes on
Yellow Engine Warning Indicator Light (LED) [I]	Goes on
Yellow ABS Indicator Light (LED) [J] (ABS Equipped Models)	Goes on

★If the light does not go on, inspect or replace the following parts.

Battery (see Charging Condition Inspection in the Electrical System chapter)
City Light Bulb (see City Light Blub Replacement in the Electrical System chapter)
License Plate Light Bulb (see License Plate Light Bulb Replacement in the Electrical System chapter)
Meter Panel LCD (see Meter Unit Inspection in the Electrical System chapter)
Green Neutral Indicator Light (LED) (see Meter Unit Inspection in the Electrical System chapter)
Red Warning Indicator Light (LED) (Oil Pressure Warning) (see Meter Unit Inspection in the Electrical System chapter)
Meter Panel Illumination (LED) (see Meter Unit Inspection in the Electrical System chapter)
ECU (see ECU Power Supply Inspection in the Fuel System (DFI) chapter)
Main Fuse 30 A, Meter Fuse 7.5 A and Brake Light/Horn Fuse 7.5 A (see Fuse Inspection in the Electrical System chapter)
Ignition Switch (see Switch Inspection in the Electrical System chapter)
Oil Pressure Switch (see Switch Inspection in the Electrical System chapter)
Gear Position Sensor (see Gear Position Sensor Input Voltage Inspection in the Fuel System (DFI) chapter)
Harness (see Wiring Inspection in the Electrical System chapter)
Yellow ABS Indicator Light (LED) (ABS Equipped Models) (see Yellow ABS Indicator Light (LED) Inspection in the Brakes chapter)

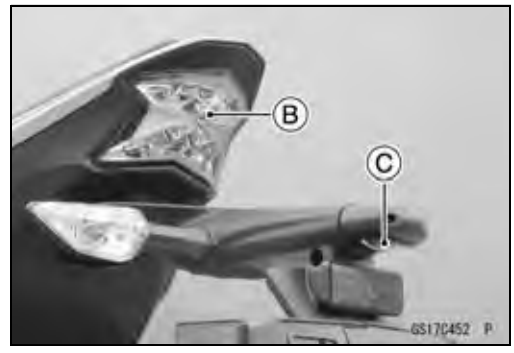

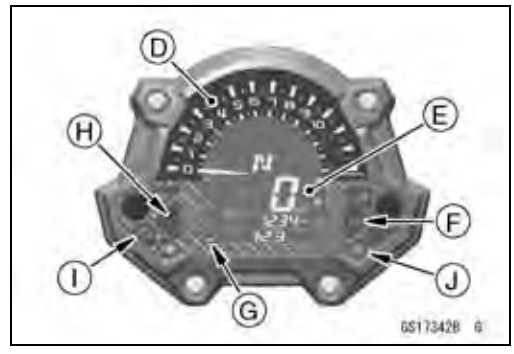

Periodic Maintenance Procedures

- Turn the ignition switch off.
- The all lights should go off.

○For models equipped with an immobilizer system, red warning indicator light (LED) will blinks. Refer to the Immobilizer System (Equipped Models) section in the Electrical System chapter).

★If the light does not go off, replace the ignition switch.

Second Step

- Turn the ignition switch to hazard position.
- The all lights should go off.

★If the light goes on, inspect or replace the following item.
Ignition Switch (see Switch Inspection in the Electrical System chapter)

Third Step

- Turn the ignition switch on.
- Turn on the turn signal switch [A] (left or right position).
- The left or right turn signal lights [B] (front and rear) according to the switch position should blink.
- The green turn signal indicator lights (LED) [C] in the meter unit should blink.

★If the each light does not blink, inspect or replace the following parts.
Turn Signal Light Bulb (see Turn Signal Light Bulb Replacement in the Electrical System chapter)
Green Turn Signal Indicator Light (LED) (see Meter Unit Inspection in the Electrical System chapter)
Turn Signal Relay Fuse 7.5 A (see Fuse Inspection in the Electrical System chapter)
Turn Signal Switch (see Switch Inspection in the Electrical System chapter)
Turn Signal Relay (see Turn Signal Relay Inspection in the Electrical System chapter)
Harness (see Wiring Inspection in the Electrical System chapter)

- Push the turn signal switch.
- The turn signal lights and green turn signal indicator light (LED) should go off.

★If the light does not go off, inspect or replace the following parts.
Turn Signal Switch (see Switch Inspection in the Electrical System chapter)
Turn Signal Relay (see Turn Signal Relay Inspection in the Electrical System chapter)

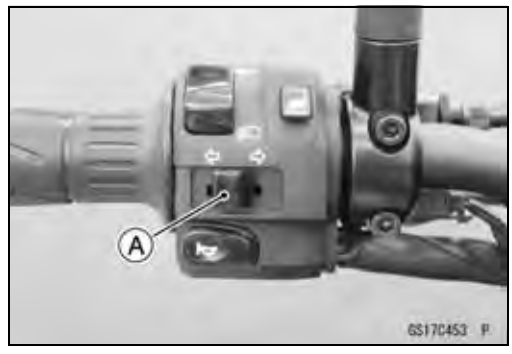

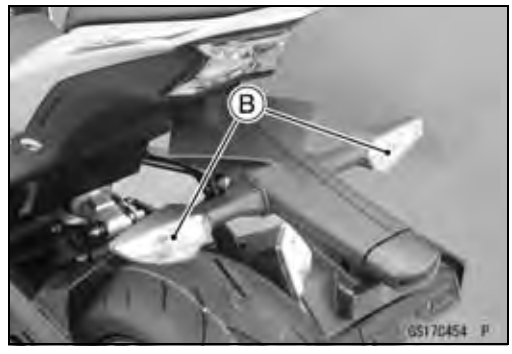

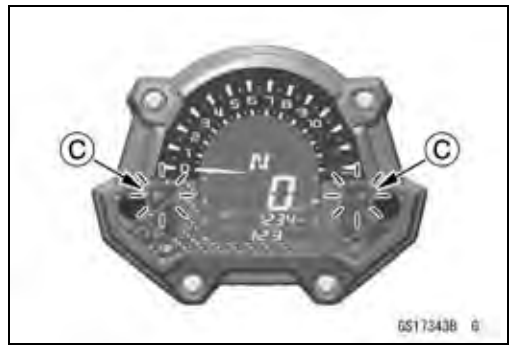

Periodic Maintenance Procedures

Fourth Step

- Set the dimmer switch [A] to low beam position.
- Start the engine.
- The low beam headlights should go on.

★If the low beam headlights do not go on, inspect or replace the following parts.
Headlight Bulb (see Headlight Bulb Replacement in the Electrical System chapter)
Headlight Fuse 15 A (see Fuse Inspection in the Electrical System chapter)
Dimmer Switch (see Switch Inspection in the Electrical System chapter)
Headlight Relay (see Relay Circuit Inspection in the Electrical System chapter)
Harness (see Wiring Inspection in the Electrical System chapter)

- Set the dimmer switch to high beam position.
- The low beam [A] and high beam [B] headlights should go on.
- The blue high beam indicator light (LED) [C] should goes on.

★If the high beam headlight and/or blue high beam indicator light (LED) does not go on, inspect or replace the following parts.
Headlight Bulb (see Headlight Bulb Replacement in the Electrical System chapter)
Dimmer Switch (see Switch Inspection in the Electrical System chapter)

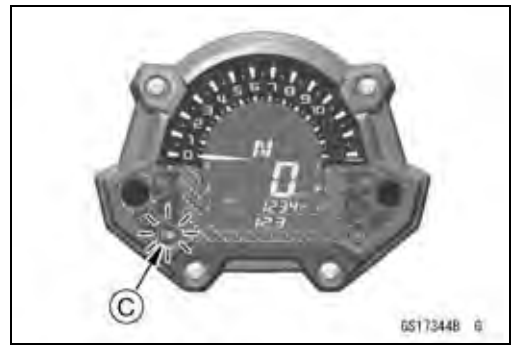

- Turn the engine stop switch to stop position.
- The low beam and high beam headlights should stay going on.

★If the headlights and blue high beam indicator light (LED) go off, inspect or replace the headlight relay (see Relay Circuit Inspection in the Electrical System chapter).

- Turn the ignition switch off.
- The headlights and blue high beam indicator light (LED) should go off.

Headlight Aiming Inspection

- Inspect the headlight beam for aiming.

Headlight Beam Horizontal Adjustment

- Turn the horizontal adjuster [A] in both headlights in or out until the beam points straight ahead.

★If the headlight beam points too low or high, adjust the vertical beam.

Headlight Beam Vertical Adjustment

- Turn the vertical adjuster [B] in both headlights in or out to adjust the headlight vertically.

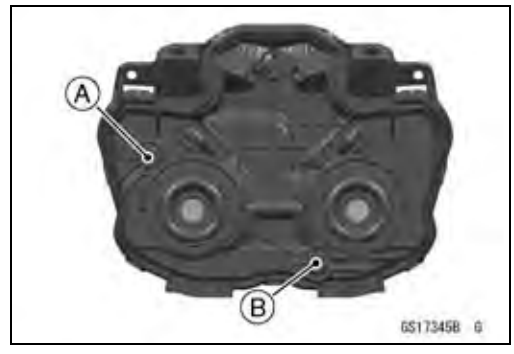

Periodic Maintenance Procedures

NOTE

○*On high beam, the brightest points should be slightly below horizontal with the motorcycle on its wheels and the rider seated. Adjust the headlight to the proper angle according to local regulations.*

○*For the US model, the proper angle is 0.4 degrees below horizontal. This is 50 mm (2.0 in.) drop at 7.6 m (25 ft) measured from the center of the headlight with the motorcycle on its wheels and the rider seated.*

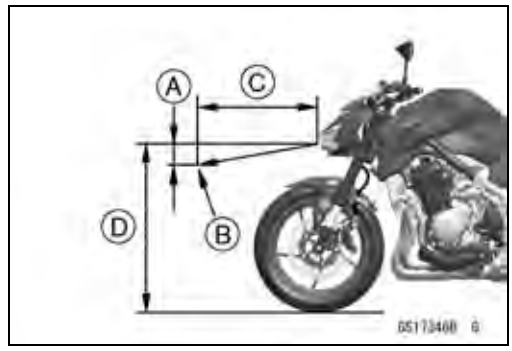

50 mm (2.0 in.) [A]
Center of Brightest Spot [B]
7.6 m (25 ft) [C]
Height of Headlight Center [D]

Side Stand Switch Operation Inspection

- Raise the rear wheel off the ground with the stand (see Rear Wheel Removal in the Wheels/Tires chapter).
- Inspect the side stand switch [A] operation accordance to below table.

Side Stand Switch Operation

Side Stand	Gear Position	Clutch Lever	Engine Start	Engine Run
Up	Neutral	Released	Starts	Continue running
Up	Neutral	Pulled in	Starts	Continue running
Up	In Gear	Released	Does not start	Continue running
Up	In Gear	Pulled in	Starts	Continue running
Down	Neutral	Released	Starts	Continue running
Down	Neutral	Pulled in	Starts	Continue running
Down	In Gear	Released	Does not start	Stops
Down	In Gear	Pulled in	Does not start	Stops

Periodic Maintenance Procedures

★If the side stand switch operation does not work, inspect or replace the following parts.
Battery (see Charging Condition Inspection in the Electrical System chapter)
Main Fuse 30 A (see Fuse Inspection in the Electrical System chapter)
Ignition Fuse 15 A (see Fuse Inspection in the Electrical System chapter)
Ignition Switch (see Switch Inspection in the Electrical System chapter)
Side Stand Switch (see Switch Inspection in the Electrical System chapter)
Engine Stop Switch (see Switch Inspection in the Electrical System chapter)
Starter Button (see Switch Inspection in the Electrical System chapter)
Gear Position Sensor (see Gear Position Sensor Input Voltage Inspection in the Fuel System (DFI) chapter)
Starter Lockout Switch (see Switch Inspection in the Electrical System chapter)
Starter Relay (see Starter Relay Inspection in the Electrical System chapter)
Relay Box (see Relay Circuit Inspection in the Electrical System chapter)
Starter Circuit Relay (see Relay Circuit Inspection in the Electrical System chapter)
Harness (see Wiring Inspection in the Electrical System chapter)

★If the all parts are good condition, replace the ECU (see ECU Removal/Installation in the Fuel System (DFI) chapter).

Engine Stop Switch Operation Inspection

First Step

- Turn the ignition switch on.
- Set the gear position in the neutral position.
- Turn the engine stop switch to stop position [A].
- Push the starter button.
- The engine does not start.

★If the engine starts, inspect or replace the engine stop switch (see Switch Inspection in the Electrical System chapter).

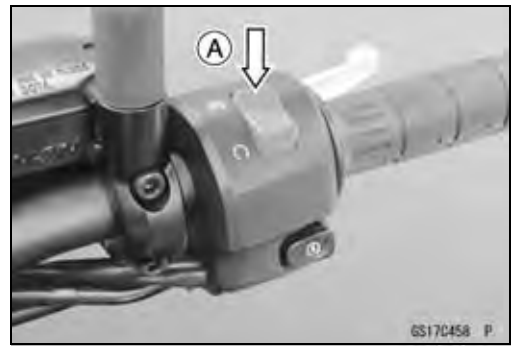

Second Step

- Turn the ignition switch on.
- Set the gear position in the neutral position.
- Turn the engine stop switch to run position [A].
- Push the starter button and start the engine.
- Turn the engine stop switch to stop position.
- Immediately the engine should be stop.

★If the engine does not stop, inspect or replace the engine stop switch (see Switch Inspection in the Electrical System chapter).

★If the engine stop switch is good condition, replace the ECU (see ECU Removal/Installation in the Fuel System (DFI) chapter).

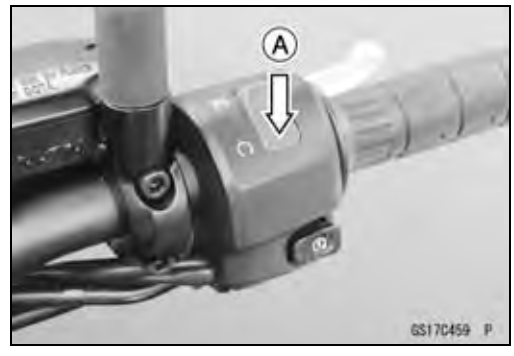

Periodic Maintenance Procedures

Spark Plug Replacement

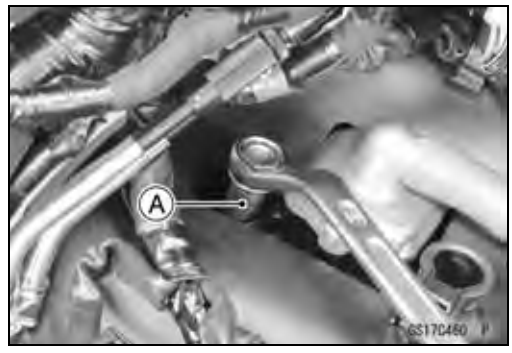

- Remove the stick coils (see Stick Coil Removal in the Electrical System chapter).
- Remove the spark plugs using the 16 mm (0.63 in.) plug wrench [A] vertically.
- Replace the spark plugs with new ones.

Standard Spark Plug
Type: NGK CR9EIA-9

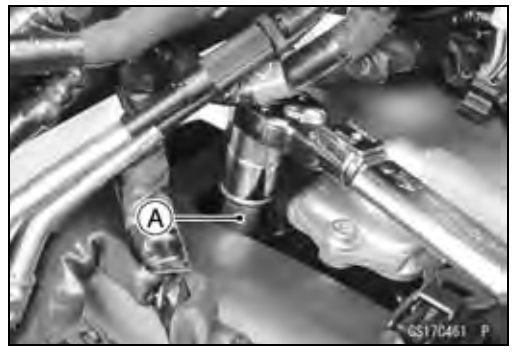

- Insert the spark plug vertically into the spark plug hole with the spark plug installed in the plug wrench [A], and finger-tighten it first.

NOTICE
If tightening the spark plug with the wrench inclined, the insulator of the spark plug may break.

- Tighten:

Torque - Spark Plugs: 13 N·m (1.3 kgf·m, 115 in·lb)

- Install the stick coils (see Stick Coil Installation in the Electrical System chapter).
- After installation, be sure the stick coils are installed securely by pulling up them lightly.

Others

Chassis Parts Lubrication

- Before lubricating each part, clean off any rusty spots with rust remover and wipe off any grease, oil, dirt, or grime.
- Lubricate the points listed below with indicated lubricant.

NOTE

○*Whenever the vehicle has been operated under wet or rainy conditions, or especially after using a high-pressure water spray, perform the general lubrication.*

Pivots: Lubricate with Grease.
Brake Lever
Brake Pedal
Clutch Lever
Side Stand

Points: Lubricate with Grease.
Clutch Inner Cable Upper and Lower Ends [A]
Throttle Inner Cable Upper and Lower Ends

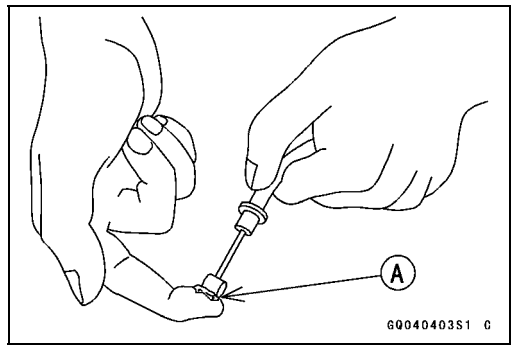

Periodic Maintenance Procedures

Cables: Lubricate with Rust Inhibitor.
Clutch Cable
Throttle Cables

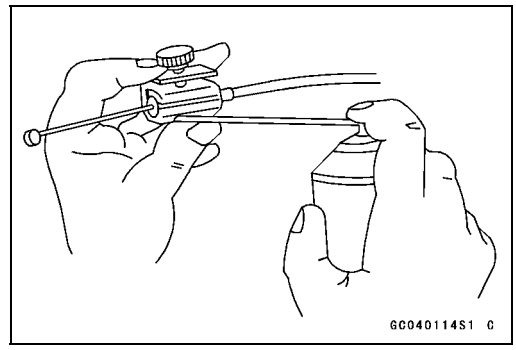

- Lubricate the cables by seeping the oil between the cable and housing.

○The cable may be lubricated by using a commercially available pressure cable lubricator with an aerosol cable lubricant.

- With the cable disconnected at both ends, the inner cable should move freely [A] within the cable housing.

★If cable movement is not free after lubricating, if the cable is frayed [B], or if the cable housing is kinked [C], replace the cable.

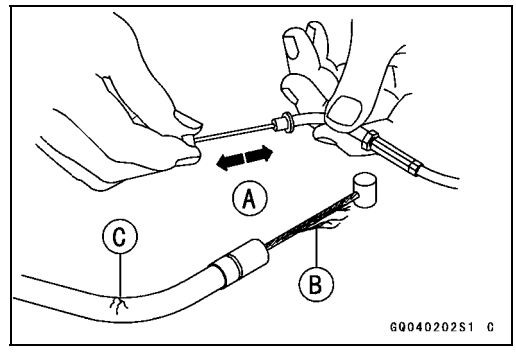

Condition of Bolts, Nuts and Fasteners Tightness Inspection

- Check the tightness of the bolts and nuts listed here. Also, check to see that each cotter pin is in place and in good condition.

NOTE

○*For the engine fasteners, check the tightness of them when the engine is cold (at room temperature).*

★If there are loose fasteners, retighten them to the specified torque following the specified tightening sequence. Refer to the appropriate chapter for torque specifications. If torque specifications are not in the appropriate chapter, see the Standard Torque Table. For each fastener, first loosen it by 1/2 turn, then tighten it.

★If cotter pins are damaged, replace them with new ones.

Periodic Maintenance Procedures

Bolt, Nut and Fastener to be checked

Engine:
- Clutch Lever Pivot Bolt Locknut
- Engine Mounting Bolts and Nuts
- Exhaust Pipe Holder Nuts
- Muffler Body Clamp Bolts
- Muffler Body Mounting Bolts and Nuts
- Premuffler Chamber Mounting Bolt
- Radiator Bolts

Wheels:
- Front Axle Clamp Bolts
- Front Axle
- Rear Axle Nut

Brakes:
- Brake Lever Pivot Bolt Locknut
- Brake Pedal Bolt
- Caliper Mounting Bolts
- Front Master Cylinder Clamp Bolts
- Rear Master Cylinder Mounting Bolts
- Rear Master Cylinder Push Rod Joint Cotter Pin

Suspension:
- Front Fork Clamp Bolts
- Rear Shock Absorber Bolts and Nuts
- Swingarm Pivot Shaft Nut
- Tie-rod Nuts
- Rocker Arm Nut

Steering:
- Handlebar Holder Bolts
- Steering Stem Head Bolt

Others:
- Footpeg Bracket Bolts
- Front Fender Mounting Bolts
- Rear Frame Bolts
- Side Stand Bolt
- Side Stand Bracket Bolts

Fuel System (DFI)

Table of Contents

Exploded View 3-4
DFI System 3-10
DFI Components Naming 3-12
DFI Parts Location 3-19
Specifications 3-22
Special Tools and Sealant 3-24
DFI Servicing Precautions 3-26
DFI Servicing Precautions 3-26
Troubleshooting the DFI System 3-28
Outline 3-28
Inquiries to Rider 3-32
DFI System Troubleshooting Guide .. 3-35
Self-Diagnosis 3-40
Self-Diagnosis Outline 3-40
Self-Diagnosis Procedures 3-41
Service Code Reading 3-43
Service Code Erasing 3-43
Backups 3-45
Main Throttle Sensor (Service Code 11) (DTC P0120, P0123) 3-48
Main Throttle Sensor Removal/Adjustment 3-48
Main Throttle Sensor Input Voltage Inspection 3-48
Main Throttle Sensor Resistance Inspection 3-49
Main Throttle Sensor Output Voltage Inspection 3-49
Intake Air Pressure Sensor #1 (Service Code 12) (DTC P0105, P0107) 3-52
Intake Air Pressure Sensor #1 Removal 3-52
Intake Air Pressure Sensor #1 Installation 3-52
Intake Air Pressure Sensor #1 Input Voltage Inspection 3-53
Intake Air Pressure Sensor #1 Output Voltage Inspection 3-54
Intake Air Temperature Sensor (Service Code 13) (DTC P0110, P0112) 3-58
Intake Air Temperature Sensor Removal/Installation 3-58
Intake Air Temperature Sensor Output Voltage Inspection 3-58
Intake Air Temperature Sensor Resistance Inspection 3-59
Water Temperature Sensor (Service Code 14) (DTC P0115, P0117) 3-61
Water Temperature Sensor Removal/Installation 3-61
Water Temperature Sensor Output Voltage Inspection 3-62
Water Temperature Sensor Resistance Inspection 3-63
Intake Air Pressure Sensor #2 (Service Code 16) (DTC P2226, P2227, P2228) 3-64
Intake Air Pressure Sensor #2 Removal 3-64
Intake Air Pressure Sensor #2 Installation 3-64
Intake Air Pressure Sensor #2 Input Voltage Inspection 3-65
Intake Air Pressure Sensor #2 Output Voltage Inspection 3-66
Crankshaft Sensor (Service Code 21) (DTC P0335) 3-68
Crankshaft Sensor Removal/Installation 3-68
Crankshaft Sensor Resistance Inspection 3-68
Crankshaft Sensor Peak Voltage Inspection 3-68
Rear Wheel Rotation Sensor (Service Code 24) (DTC P2158) 3-69
Rear Wheel Rotation Sensor Signal Inspection 3-69
Gear Position Sensor (Service Code 25) (DTC P0914, P0915, P0916) 3-71
Gear Position Sensor Removal/Installation 3-71
Gear Position Sensor Input Voltage Inspection 3-71
Gear Position Sensor Output Voltage Inspection 3-72
Vehicle-down Sensor (Service Code 31) (DTC C0064) 3-74
Vehicle-down Sensor Removal 3-74
Vehicle-down Sensor Installation . 3-74
Vehicle-down Sensor Input Voltage Inspection 3-75
Vehicle-down Sensor Output Voltage Inspection 3-76
Subthrottle Sensor (Service Code 32) (DTC P0220, P0223) 3-79
Subthrottle Sensor Removal/Adjustment 3-79

Subthrottle Sensor Input Voltage Inspection 3-79
Subthrottle Sensor Output Voltage Inspection 3-80
Subthrottle Sensor Resistance Inspection 3-82
Oxygen Sensor - not activated (Service Code 33) (DTC P0130, P0132) 3-83
Oxygen Sensor Removal/Installation 3-83
Oxygen Sensor Inspection 3-83
Immobilizer Amplifier (Service Code 35, Equipped Models) 3-86
Antenna Resistance Inspection ... 3-86
Amplifier Input Voltage Inspection 3-86
Blank Key Detection (Service Code 36, Equipped Models) 3-87
Ignition Key Inspection 3-87
ECU Communication Error (Service Code 39) 3-88
ECU Communication Line Inspection 3-88
Fuel Injectors (Service Code 41, 42, 43, 44) (DTC P0201, P0202, P0203, P0204) 3-89
Fuel Injector Removal/Installation 3-89
Fuel Injector Audible Inspection ... 3-89
Fuel Injector Resistance Inspection 3-89
Fuel Injector Power Source Voltage Inspection 3-90
Fuel Injector Output Voltage Inspection 3-91
Fuel Injector Fuel Line Inspection 3-92
Stick Coils #1, #2, #3, #4 (Service Code 51, 52, 53, 54) (DTC P0351, P0352, P0353, P0354) 3-94
Stick Coil Removal/Installation 3-94
Stick Coil Primary Winding Resistance Inspection 3-94
Stick Coil Input Voltage Inspection 3-94
Radiator Fan Relay (Service Code 56) (DTC P0480) 3-96
Radiator Fan Relay Removal/Installation 3-96
Radiator Fan Relay Inspection 3-96
Subthrottle Valve Actuator (Service Code 62) (DTC P2100) 3-97
Subthrottle Valve Actuator Removal 3-97
Subthrottle Valve Actuator Inspection 3-97
Subthrottle Valve Actuator Resistance Inspection 3-97
Subthrottle Valve Actuator Input Voltage Inspection 3-98
Air Switching Valve (Service Code 64) (DTC P0410) 3-100
Air Switching Valve Removal/Installation 3-100
Air Switching Valve Inspection 3-100
Oxygen Sensor Heater (Service Code 67) (DTC P0030) 3-101
Oxygen Sensor Heater Removal/Installation 3-101
Oxygen Sensor Heater Resistance Inspection 3-101
Oxygen Sensor Heater Power Source Voltage Inspection 3-102
Fuel Supply System (Service Code 94) (DTC P0170) 3-104
Fuel Supply System Inspection 3-104
Purge Valve (Service Code 3A, Equipped Models) (DTC P0443) 3-105
Purge Valve Removal/Installation 3-105
Purge Valve Inspection 3-105
Warning Indicator Light (LED) 3-107
Yellow Engine Warning/Red Warning Indicator Light (LED) Inspection 3-107
ECU 3-108
ECU Identification 3-108
ECU Removal 3-108
ECU Installation 3-109
ECU Power Supply Inspection 3-109
DFI Power Source 3-112
ECU Fuse Removal 3-112
ECU Fuse Installation 3-112
ECU Fuse Inspection 3-112
ECU Main Relay Removal/Installation 3-112
ECU Main Relay Inspection 3-112
Fuel Line 3-113
Fuel Pressure Inspection 3-113
Fuel Flow Rate Inspection 3-114
Fuel Pump 3-116
Fuel Pump Removal 3-116
Fuel Pump Installation 3-117
Fuel Pump Operation Inspection . 3-117
Fuel Pump Operating Voltage Inspection 3-118
Pressure Regulator Removal 3-119
Fuel Pump Relay Removal/Installation 3-119
Fuel Pump Relay Inspection 3-119
Throttle Grip and Cables 3-121
Free Play Inspection 3-121
Free Play Adjustment 3-121
Cable Installation 3-121
Cable Lubrication 3-121
Throttle Body Assy 3-122

Idle Speed Inspection/Adjustment 3-122
Synchronization Inspection/Adjustment 3-122
Throttle Body Assy Removal 3-122
Throttle Body Assy Installation 3-123
Throttle Body Assy Disassembly 3-125
Throttle Body Assy Assembly 3-126
Air Cleaner 3-127
Air Cleaner Element Removal/Installation 3-127
Air Cleaner Element Inspection 3-127
Air Cleaner Oil Draining 3-127
Air Cleaner Housing Removal 3-127
Air Cleaner Housing Installation 3-128
Fuel Tank 3-129
Fuel Tank Removal 3-129
Fuel Tank Installation 3-131
Fuel Tank and Cap Inspection 3-132
Fuel Tank Cleaning 3-133
Evaporative Emission Control System (Equipped Models) 3-134
Parts Removal/Installation 3-134
Hose Inspection 3-134
Purge Valve Inspection 3-134
Canister Inspection 3-134

Exploded View

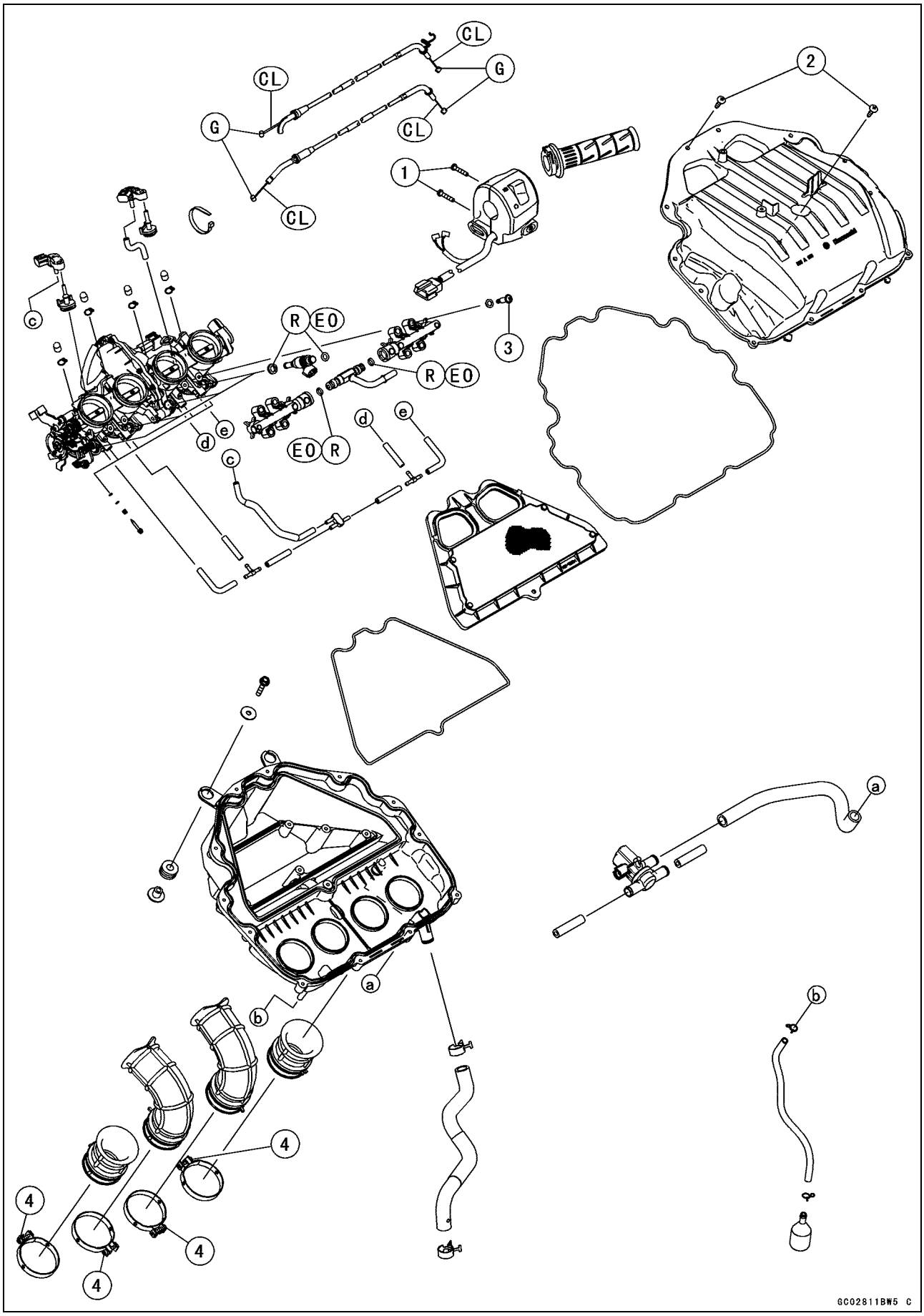

Exploded View

No.	Fastener	Torque			Remarks
		N·m	kgf·m	ft·lb	
1	Switch Housing Screws	3.5	0.36	31 in·lb	
2	Air Cleaner Housing Assembly Screws	1.1	0.11	10 in·lb	
3	Delivery Pipe Assy Mounting Screws	3.5	0.36	31 in·lb	
4	Air Cleaner Housing Clamp Bolts	2.0	0.20	18 in·lb	

CL: Apply cable lubricant.
EO: Apply engine oil.
G: Apply grease.
R: Replacement Parts

Exploded View

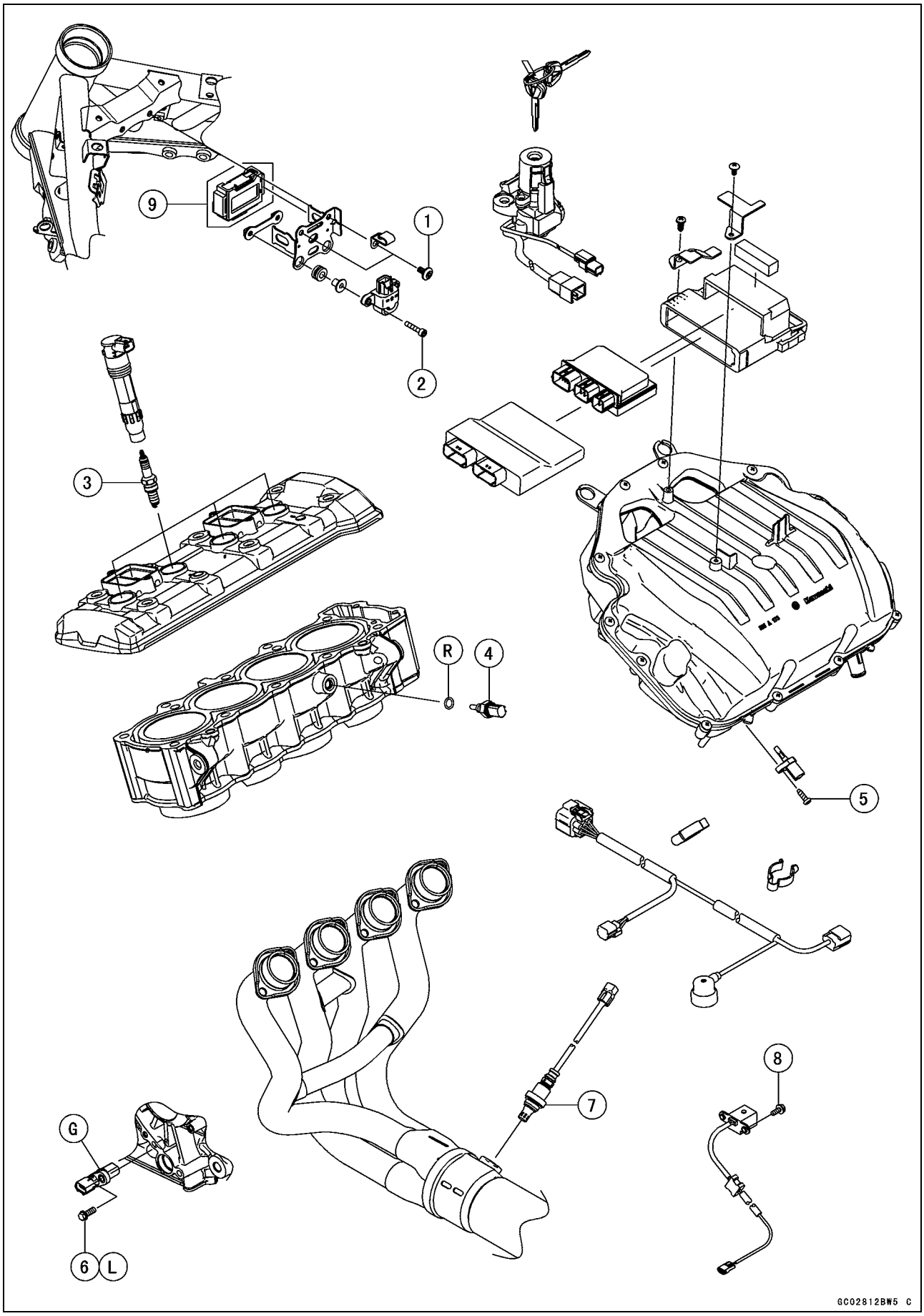

Exploded View

No.	Fastener	Torque			Remarks
		N·m	kgf·m	ft·lb	
1	Bracket Bolts	11	1.1	97 in·lb	
2	Vehicle-down Sensor Mounting Bolts	5.9	0.60	52 in·lb	
3	Spark Plugs	13	1.3	115 in·lb	
4	Water Temperature Sensor	12	1.2	106 in·lb	
5	Intake Air Temperature Sensor Screw	1.2	0.12	11 in·lb	
6	Gear Position Sensor Bolt	10	1.0	89 in·lb	L
7	Oxygen Sensor	44	4.5	32	
8	Crankshaft Sensor Bolts	6.0	0.61	53 in·lb	

9. Immobilizer System Equipped Models
G: Apply grease.
L: Apply a non-permanent locking agent.
R: Replacement Parts

Exploded View

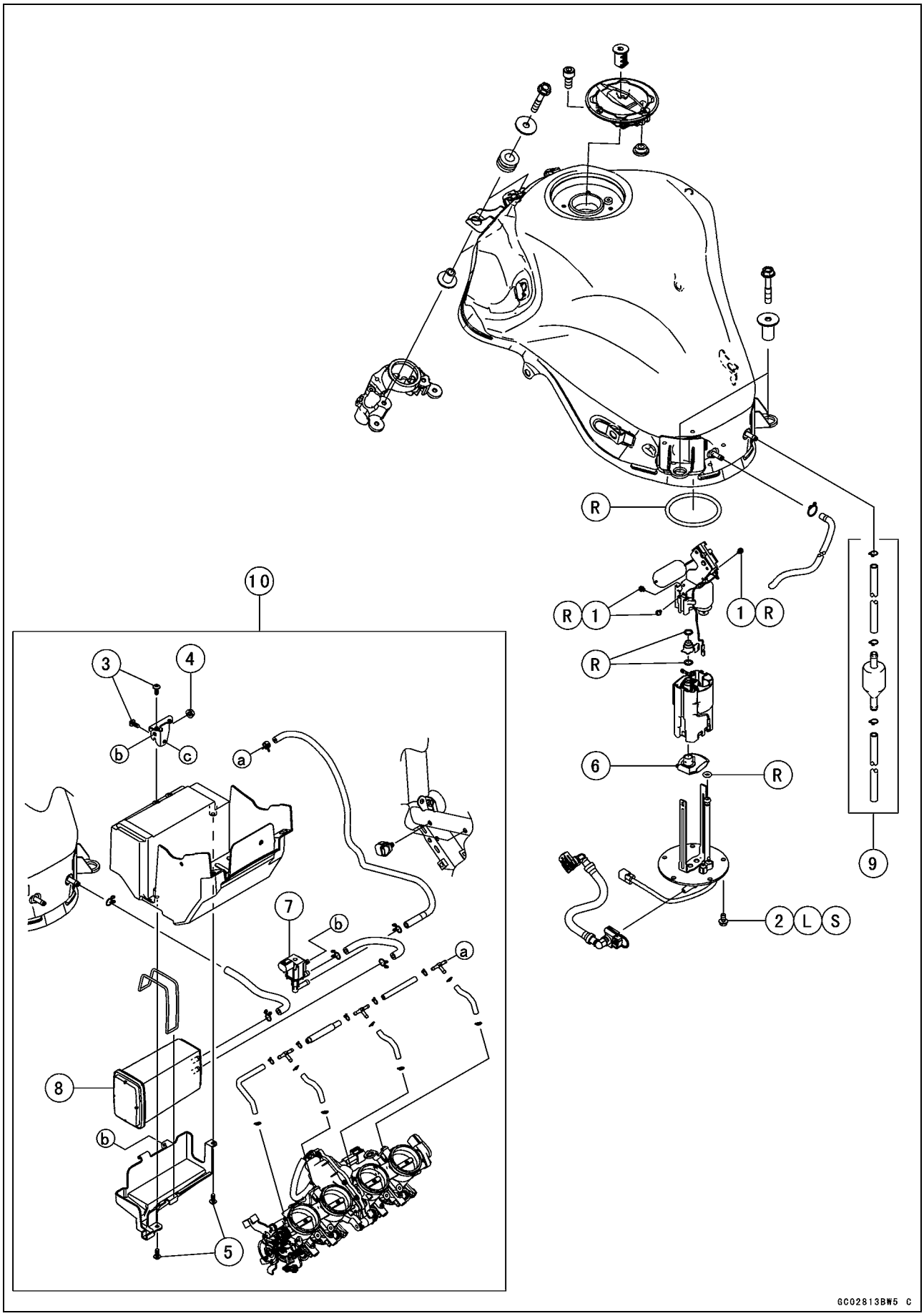

Exploded View

No.	Fastener	Torque			Remarks
		N·m	kgf·m	ft·lb	
1	Fuel Pump Assembly Screws	0.98	0.10	8.7 in·lb	R
2	Fuel Pump Bolts	9.8	1.0	87 in·lb	L, S
3	Purge Valve Bracket Bolts	1.1	0.11	10 in·lb	
4	Purge Valve Mounting Nut	6.9	0.70	61 in·lb	
5	Canister Holder Bolts	1.1	0.11	10 in·lb	

6. Fuel Filter
7. Purge Valve
8. Canister
9. Other than CAL, CN, SEA-B1, TH and WVTA (FULL)
10. CAL, CN, SEA-B1, TH and WVTA (FULL)

L: Apply a non-permanent locking agent.
R: Replacement Parts
S: Follow the specified tightening sequence.

DFI System

DFI System

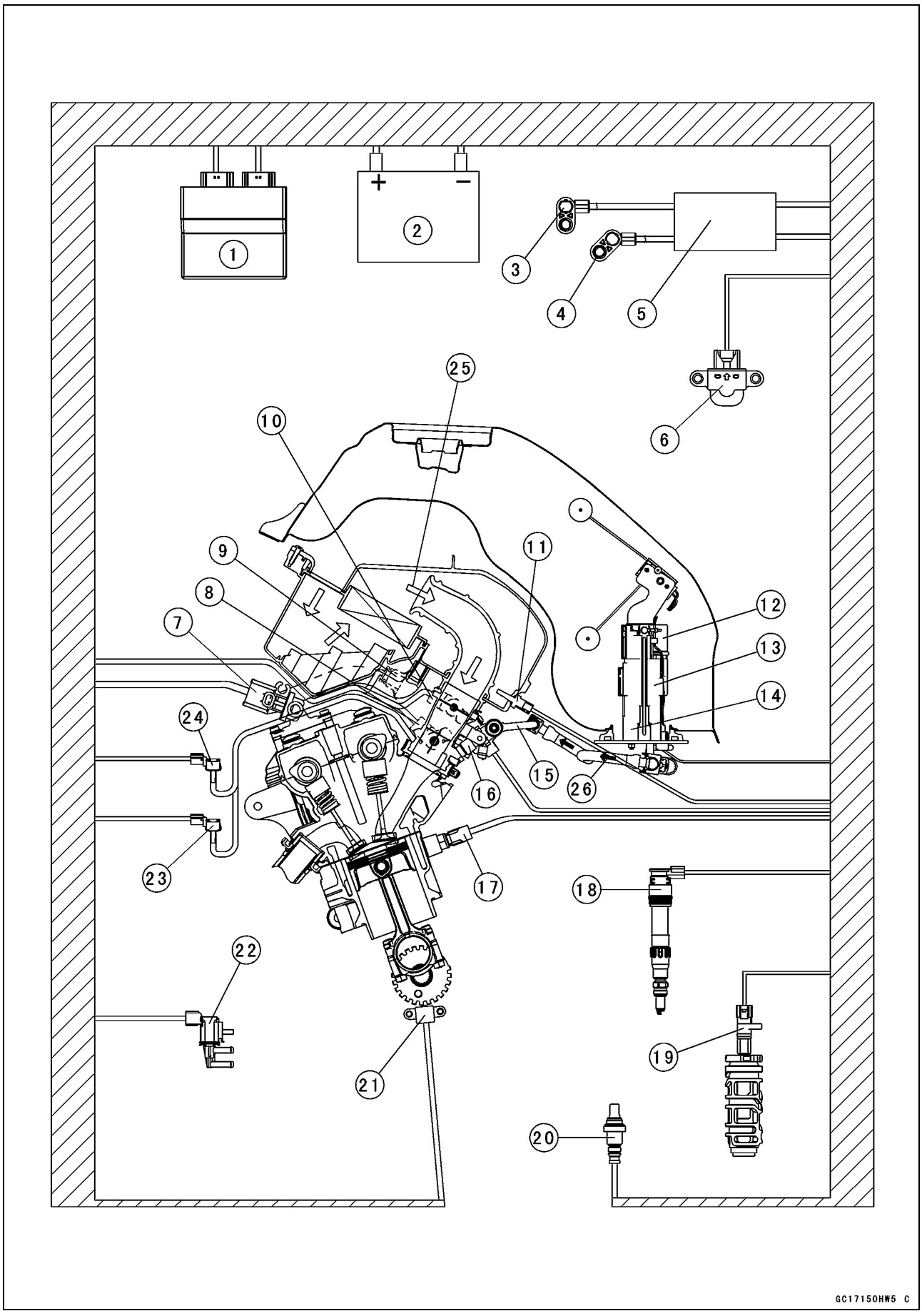

DFI System

1. ECU
2. Battery 12 V 8 Ah
3. Front Wheel Rotation Sensor
4. Rear Wheel Rotation Sensor
5. ABS Hydraulic Unit
6. Vehicle-down Sensor
7. Air Switching Valve
8. Main Throttle Sensor
9. Subthrottle Valve Actuator
10. Subthrottle Sensor
11. Intake Air Temperature Sensor
12. Pressure Regulator
13. Fuel Pump
14. Fuel Filter
15. Delivery Pipe
16. Fuel Injectors
17. Water Temperature Sensor
18. Stick Coils
19. Gear Position Sensor
20. Oxygen Sensor
21. Crankshaft Sensor
22. Purge Valve (Equipped Models)
23. Intake Air Pressure Sensor #1
24. Intake Air Pressure Sensor #2
25. Air Flow
26. Fuel Flow

DFI System

DFI Components Naming

The terms used in the European regulation for DFI components are sometimes different from those used by Kawasaki. Use this table to cross reference terms which may appear in a generic scan tool when diagnosing the DFI system.

Sensors described in R44/2014 (Description per ISO 15031-6 in the parentheses)	Kawasaki Name
Barometric pressure sensor (Barometric pressure circuit)	Intake air pressure sensor #2
Crankshaft position sensor (Crankshaft position sensor “A”)	Crankshaft sensor
Engine coolant temperature sensor (Engine coolant temperature sensor 1)	Water temperature sensor
Gear shift position sensor (Gear Shift Position Circuit)	Gear position sensor
Intake air temperature sensor (Intake air temperature sensor 1)	Intake air temperature sensor
Manifold absolute pressure sensor (Manifold absolute pressure/barometric pressure circuit)	Intake air pressure sensor #1
O_2 sensor (binary/linear) signals (O_2 sensor)	Oxygen sensor
Throttle position sensor (Throttle/Pedal position sensor/switch “A”)	Main throttle sensor
Throttle position sensor (Throttle/Pedal position sensor/switch “B”)	Subthrottle sensor
Wheel speed sensor (Vehicle speed sensor “B”)	Rear wheel rotation sensor

Actuators described in R44/2014 (Description per ISO 15031-6 in the parentheses)	Kawasaki Name
Evaporative emission system purge control valve (Evaporative emission system purge control valve)	Purge valve
Fuel injector (Injector - cylinder 1 ~ 4)	Fuel injector
Ignition coil primary control circuits (Ignition coil “A ~ D” primary/secondary circuit)	Stick coil
O_2 sensor heater (HO_2S heater control circuit)	Oxygen sensor heater
Secondary air injection system (Secondary air injection system)	Air switching valve
Throttle by wire actuator (Throttle actuator control motor circuit)	Subthrottle valve actuator

DFI System

This page intentionally left blank.

DFI System

DFI System Wiring Diagram (ZR900A)

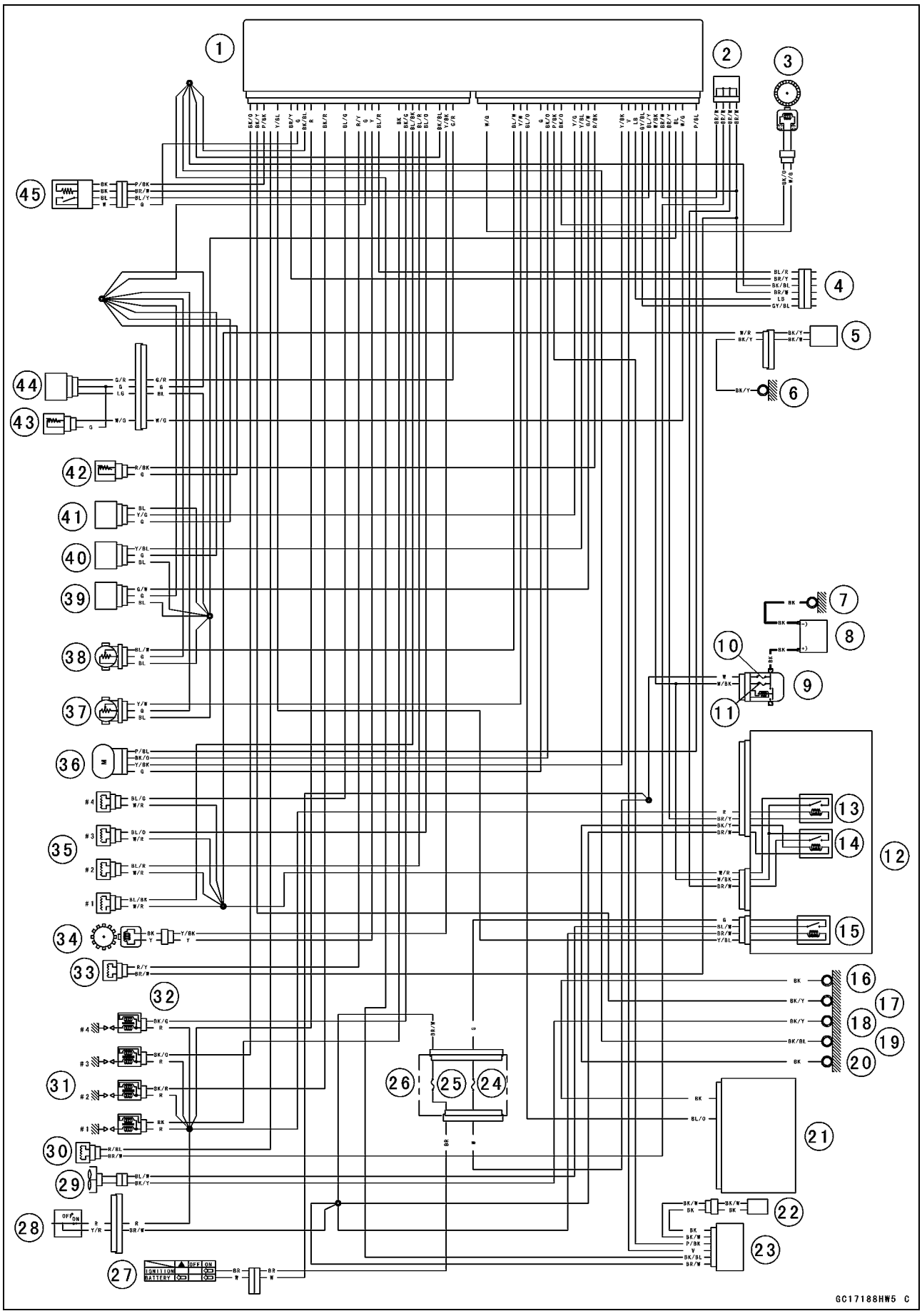

DFI System

Part Names

1. ECU
2. Joint Connector B
3. Rear Wheel Rotation Sensor
4. Immobilizer (Equipped Models)/Kawasaki Diagnostic System Connector
5. Fuel Pump
6. Frame Ground (2)
7. Engine Ground
8. Battery 12 V 8 Ah
9. Starter Relay
10. Main Fuse 30 A
11. ECU Fuse 15 A
12. Relay Box
13. Fuel Pump Relay
14. ECU Main Relay
15. Radiator Fan Relay
16. Frame Ground (10)
17. Frame Ground (9)
18. Frame Ground (8)
19. Frame Ground (7)
20. Frame Ground (6)
21. Meter Unit
22. Immobilizer Antenna (Equipped Models)
23. Immobilizer Amplifier (Equipped Models)
24. Fan Fuse 15 A
25. Ignition Fuse 15 A
26. Fuse Box (1)
27. Ignition Switch
28. Engine Stop Switch
29. Fan Motor
30. Air Switching Valve
31. Spark Plugs
32. Stick Coil #1, #2, #3, #4
33. Purge Valve
34. Crankshaft Sensor
35. Fuel Injectors
36. Subthrottle Valve Actuator
37. Main Throttle Sensor
38. Subthrottle Sensor
39. Intake Air Pressure Sensor #2
40. Intake Air Pressure Sensor #1
41. Vehicle-down Sensor
42. Intake Air Temperature Sensor
43. Water Temperature Sensor
44. Gear Position Sensor
45. Oxygen Sensor

○Color Codes:

BK: Black	GY: Gray	PU: Purple
BL: Blue	LB: Light Blue	R: Red
BR: Brown	LG: Light Green	V: Violet
CH: Chocolate	O: Orange	W: White
DG: Dark Green	P: Pink	Y: Yellow
G: Green		

DFI System

DFI System Wiring Diagram (ZR900B)

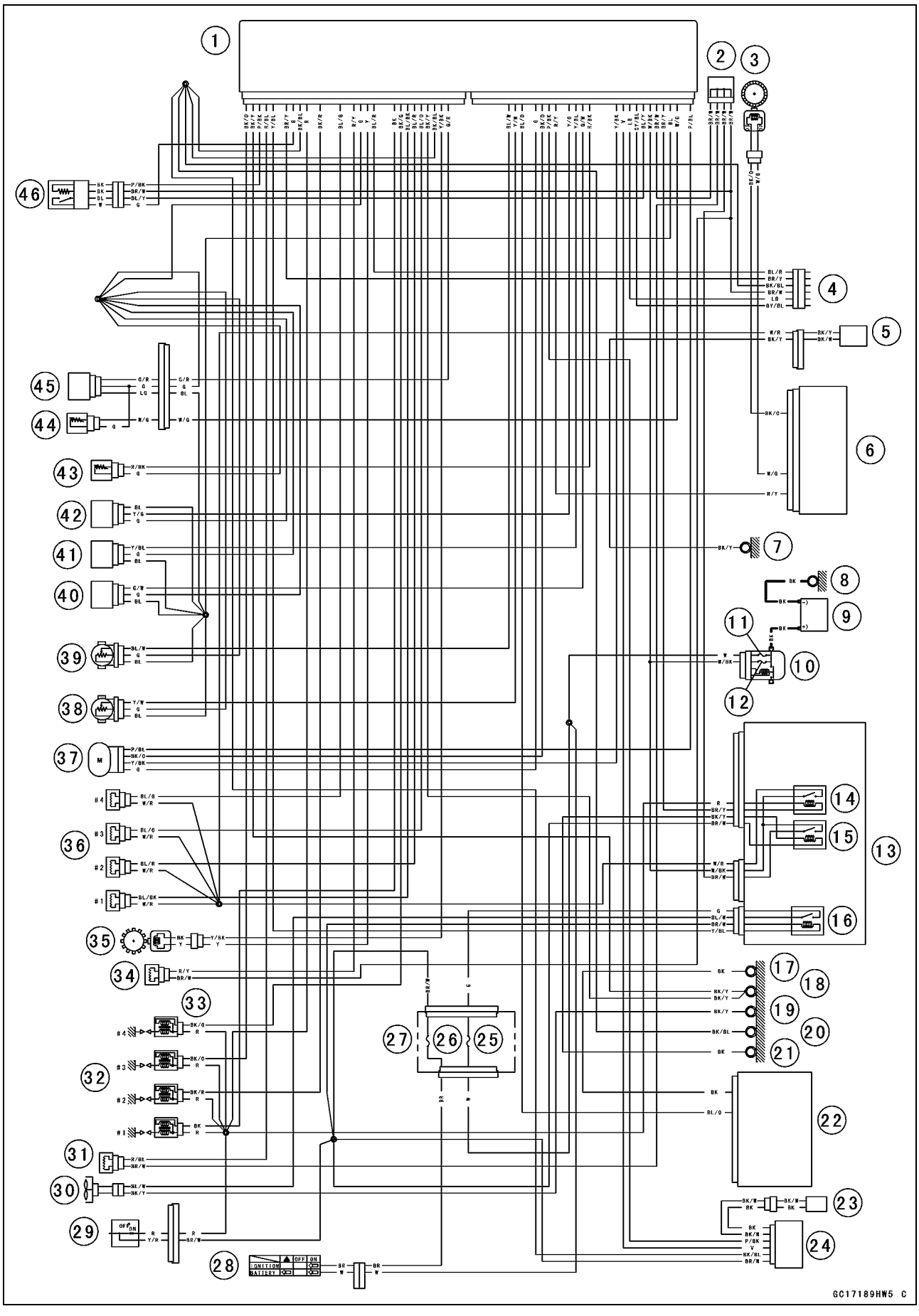

DFI System

Part Names

1. ECU
2. Joint Connector B
3. Rear Wheel Rotation Sensor
4. Immobilizer (Equipped Models)/Kawasaki Diagnostic System Connector
5. Fuel Pump
6. ABS Hydraulic Unit
7. Frame Ground (2)
8. Engine Ground
9. Battery 12 V 8 Ah
10. Starter Relay
11. Main Fuse 30 A
12. ECU Fuse 15 A
13. Relay Box
14. Fuel Pump Relay
15. ECU Main Relay
16. Radiator Fan Relay
17. Frame Ground (10)
18. Frame Ground (9)
19. Frame Ground (8)
20. Frame Ground (7)
21. Frame Ground (6)
22. Meter Unit
23. Immobilizer Antenna (Equipped Models)
24. Immobilizer Amplifier (Equipped Models)
25. Fan Fuse 15 A
26. Ignition Fuse 15 A
27. Fuse Box (1)
28. Ignition Switch
29. Engine Stop Switch
30. Fan Motor
31. Air Switching Valve
32. Spark Plugs
33. Stick Coil #1, #2, #3, #4
34. Purge Valve (Equipped Models)
35. Crankshaft Sensor
36. Fuel Injectors
37. Subthrottle Valve Actuator
38. Main Throttle Sensor
39. Subthrottle Sensor
40. Intake Air Pressure Sensor #2
41. Intake Air Pressure Sensor #1
42. Vehicle-down Sensor
43. Intake Air Temperature Sensor
44. Water Temperature Sensor
45. Gear Position Sensor
46. Oxygen Sensor

○Color Codes:

BK: Black	GY: Gray	PU: Purple
BL: Blue	LB: Light Blue	R: Red
BR: Brown	LG: Light Green	V: Violet
CH: Chocolate	O: Orange	W: White
DG: Dark Green	P: Pink	Y: Yellow
G: Green		

DFI System

Terminal Numbers of ECU Connectors

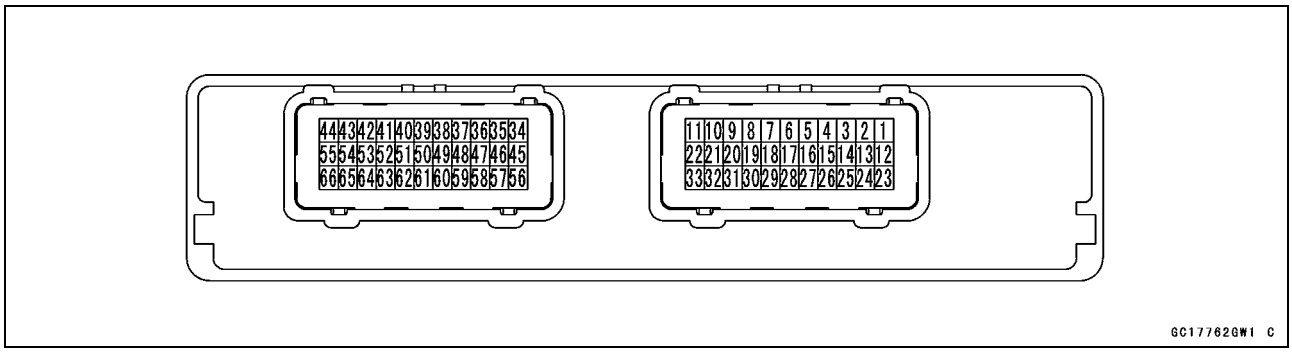

Terminal Names

1. Subthrottle Valve Actuator: P/BL
2. Unused
3. Water Temperature Sensor: W/G
4. Power Supply to Sensors: BL
5. Fuel Pump Relay: BR/Y
6. Power Supply to ECU (from Battery): BR/W
7. Power Supply to ECU (from Battery): W/BK
8. Oxygen Sensor: BL/Y
9. CAN Communication Line (High): GY/BL
10. CAN Communication Line (Low): LB
11. Immobilizer Amplifier (Equipped Models): V
12. Subthrottle Valve Actuator: Y/BK
13. Unused
14. Unused
15. Unused
16. Intake Air Temperature Sensor: R/BK
17. Intake Air Pressure Sensor #2: G/W
18. Intake Air Pressure Sensor #1: Y/BL
19. Vehicle-down Sensor: Y/G
20. Rear Wheel Rotation Sensor Output: P
21. Rear Wheel Rotation Sensor Signal: R/Y
22. Immobilizer Amplifier (Equipped Models): P/BK
23. Subthrottle Valve Actuator: BK/O
24. Subthrottle Valve Actuator: G
25. Unused
26. Meter Communication Line: BL/O
27. Main Throttle Sensor: Y/W
28. Subthrottle Sensor: BL/W
29. Unused
30. Unused
31. Unused
32. Power Supply to Rear Wheel Rotation Sensor (ZR900A): W/G
33. Side Stand Switch: G/BK
34. Unused
35. Starter Button: R/BK
36. Gear Position Sensor: G/R
37. Crankshaft Sensor (–): Y/BK
38. Ground for Control System: BK/BL
39. Ground for Fuel System: BK/Y
40. Fuel Injector #3: BL/O
41. Fuel Injector #2: BL/R
42. Fuel Injector #1: BL/BK
43. Stick Coil #4: BK/G
44. Stick Coil #1: BK
45. Unused
46. Starter Lockout Switch: R/G
47. External Communication Line (Immobilizer System (Equipped Models)/*KDS): BL/R
48. Crankshaft Sensor (+): Y
49. Ground for Sensors: G
50. Purge Valve (Equipped Models): R/Y
51. Green Neutral Indicator Light (LED): LG
52. Fuel Injector #4: BL/G
53. Unused
54. Unused
55. Stick Coil #2: BK/R
56. Unused
57. Engine Stop Switch: R
58. Ground: BK/BL
59. Oxygen Sensor: G
60. External Communication Line (Immobilizer System (Equipped Models)/*KDS): BR/Y
61. Meter Unit (Tachometer): LB
62. Radiator Fan Relay: Y/BL
63. Air Switching Valve: R/BL
64. Oxygen Sensor Heater: P/BK
65. Ground for Ignition System: BK/Y
66. Stick Coil #3: BK/O

*: KDS (Kawasaki Diagnostic System)

DFI Parts Location

Immobilizer Amplifier [A] (Equipped Models)
Vehicle-down Sensor [B]
Air Switching Valve [C]
Stick Coils #1, #2, #3, #4 [D]

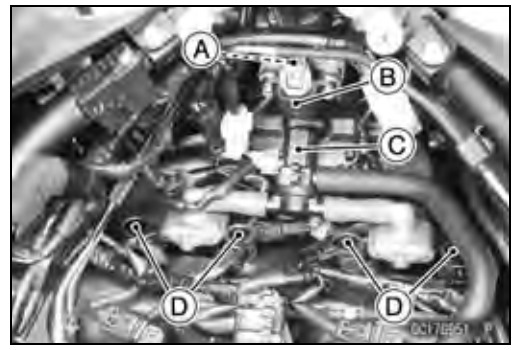

Intake Air Pressure Sensor #1 [A]
Subthrottle Valve Actuator [B]
Intake Air Pressure Sensor #2 [C]
Fuel Injectors #1, #2, #3, #4 [D]

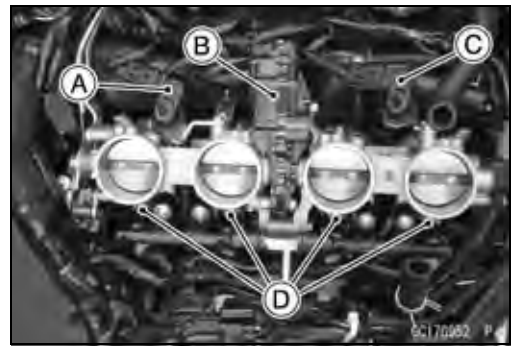

Subthrottle Sensor [A]
Main Throttle Sensor [B]

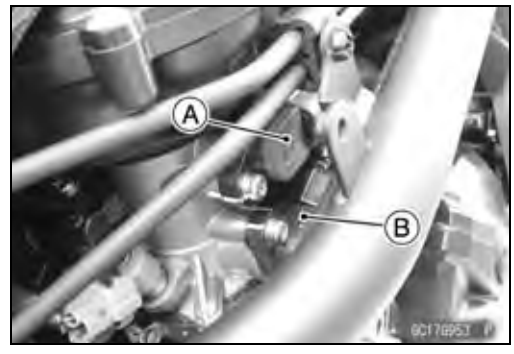

Water Temperature Sensor [A]

Intake Air Temperature Sensor [A]

DFI Parts Location

Crankshaft Sensor [A]
Oxygen Sensor [B]

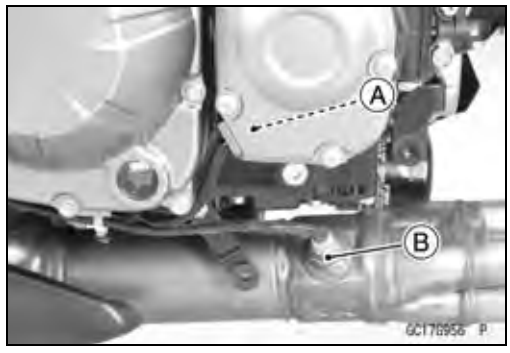

Fuse Box (2) [A]
Main Fuse 30 A [B]
ECU Fuse 15 A [C]
Battery 12 V 8 Ah [D]
Immobilizer (Equipped Models)/Kawasaki Diagnostic System Connector [E]

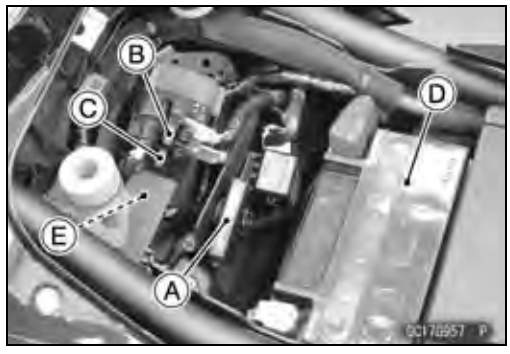

Relay Box [A] (ECU Main Relay, Fuel Pump Relay, Radiator Fan Relay)
ECU [B]
Fuse Box (1) [C]

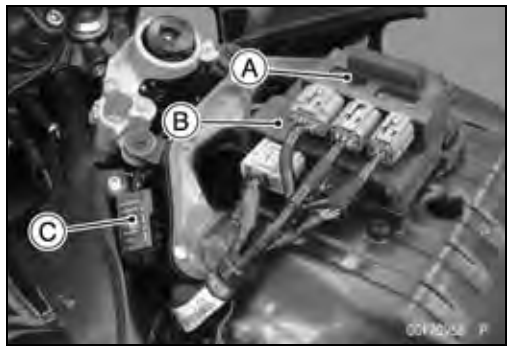

Fuel Pump [A]

Yellow Engine Warning Indicator Light (LED) [A]
Ignition Key [B] (Transponder, Immobilizer System Equipped Models)
Immobilizer Antenna [C] (Equipped Models)
Ignition Switch [D]

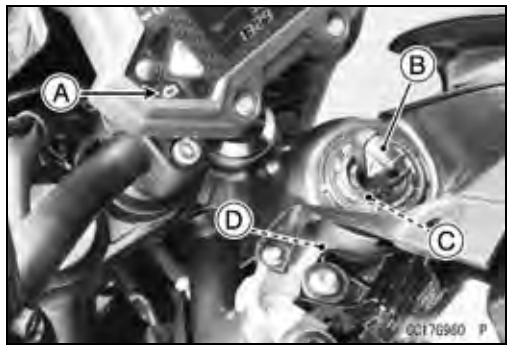

DFI Parts Location

Front Wheel Rotation Sensor [A]

Rear Wheel Rotation Sensor [A]

Purge Valve [A] (Equipped Models)

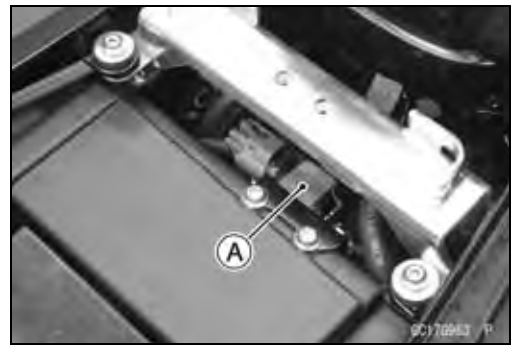

Gear Position Sensor [A]

Specifications

Item	Standard
Digital Fuel Injection System	
Idle Speed	1 100 ±50 r/min (rpm)
Throttle Body Assy:	
Throttle Valve	Dual throttle valve
Bore	ϕ36 mm (1.4 in.)
Throttle Body Vacuum	37.3 ±1.3 kPa (280 ±10 mmHg) at idle speed
Bypass Screws (Turn Out)	– – –
ECU:	
Make	DENSO
Type	Digital memory type, with built in IC igniter, sealed with resin
Fuel Pressure (High Pressure Line)	294 kPa (3.0 kgf/cm², 43 psi) with engine idling
Fuel Pump:	
Type	In-tank pump (in fuel tank)
Discharge	50 mL (1.7 US oz.) or more for 3 seconds
Fuel Injectors:	
Type	QL7064
Nozzle Type	Fine atomizing type with 12 holes
Resistance	About 12.0 Ω @20°C (68°F)
Main Throttle Sensor:	
Input Voltage	DC 4.75 ~ 5.25 V
Output Voltage	DC 1.00 ~ 1.02 V at idle throttle opening
	DC 4.05 ~ 4.48 V at full throttle opening (for reference)
Resistance	4 ~ 6 kΩ
Intake Air Pressure Sensor #1/#2:	
Input Voltage	DC 4.75 ~ 5.25 V
Output Voltage	DC 3.80 ~ 4.20 V at standard atmospheric pressure (101.32 kPa, 76 cmHg)
Intake Air Temperature Sensor:	
Output Voltage	About DC 2.25 ~ 2.50 V @20°C (68°F)
Resistance	5.4 ~ 6.6 kΩ @0°C (32°F)
	0.29 ~ 0.39 kΩ @80°C (176°F)
Water Temperature Sensor:	
Output Voltage	About DC 2.80 ~ 2.97 V @20°C (68°F)
Gear Position Sensor:	
Input Voltage	DC 4.75 ~ 5.25 V
Output Voltage	in the text
Vehicle-down Sensor:	
Input Voltage	DC 4.75 ~ 5.25 V
Output Voltage	With sensor tilted 60 ~ 70° or more right or left: DC 0.65 ~ 1.35 V
	With sensor arrow mark pointed up: DC 3.55 ~ 4.45 V

Specifications

Item	Standard
Subthrottle Sensor:	
Input Voltage	DC 4.75 ~ 5.25 V
Output Voltage	DC 0.48 ~ 0.52 V at subthrottle valve full close position
	DC 3.66 ~ 4.38 V at subthrottle valve full open position (for reference)
Resistance	4 ~ 6 kΩ
Subthrottle Valve Actuator:	
Input Voltage	About DC 8.5 ~ 10.5 V and then 0 V or About DC 8.5 ~ 10.5 V
Resistance	About 5.2 ~ 7.8 Ω
Oxygen Sensor:	
Output Voltage (Rich)	DC 0.7 V or more
Output Voltage (Lean)	DC 0.2 V or less
Heater Resistance	11.7 ~ 15.5 Ω @20°C (68°F)
Immobilizer Antenna (Equipped Models):	
Resistance	About 3.0 ~ 4.6 Ω
Purge Valve (Equipped Models):	
Resistance	30 ~ 34 Ω @20°C (68°F)
Throttle Grip and Cables	
Throttle Grip Free Play	2 ~ 3 mm (0.08 ~ 0.12 in.)
Air Cleaner	
Air Cleaner Element	Viscous paper element

Special Tools and Sealant

Oil Pressure Gauge, 5 kgf/cm²:
57001-125

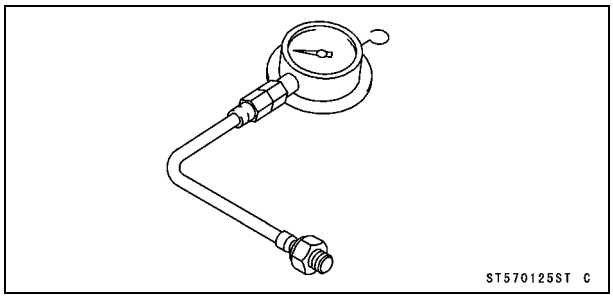

Needle Adapter Set:
57001-1457

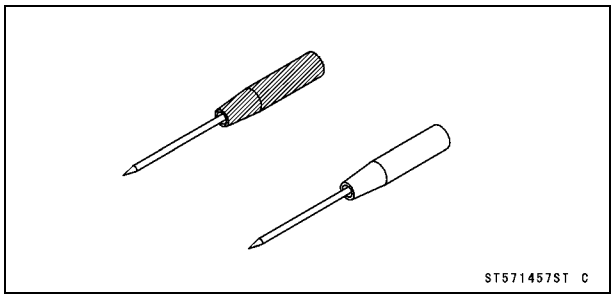

Carburetor Drain Plug Wrench, Hex 3:
57001-1269

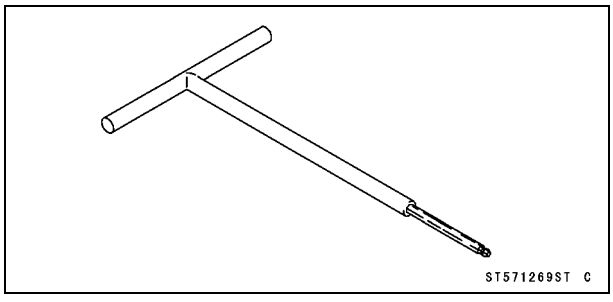

Throttle Sensor Setting Adapter:
57001-1538

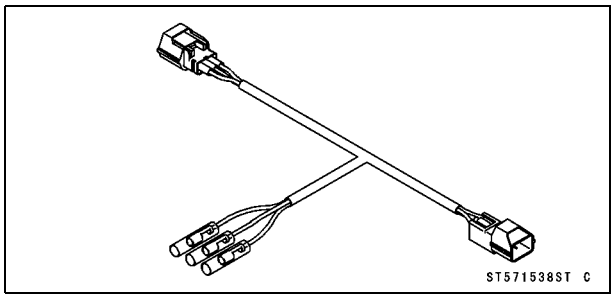

Fork Oil Level Gauge:
57001-1290

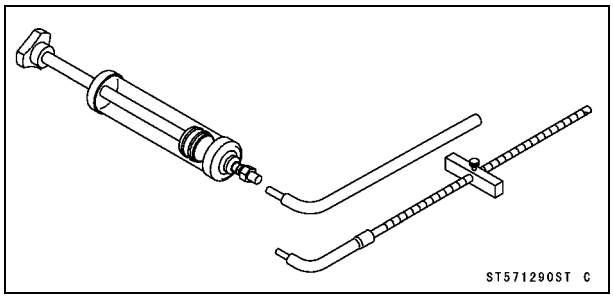

Extension Tube:
57001-1578

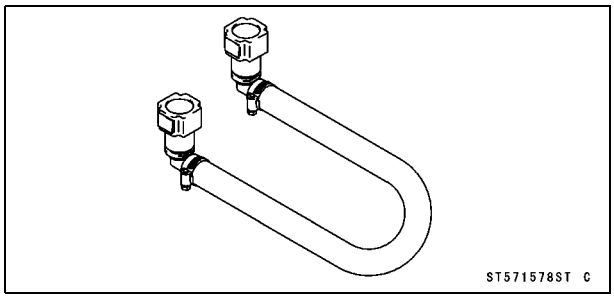

Vacuum Gauge:
57001-1369

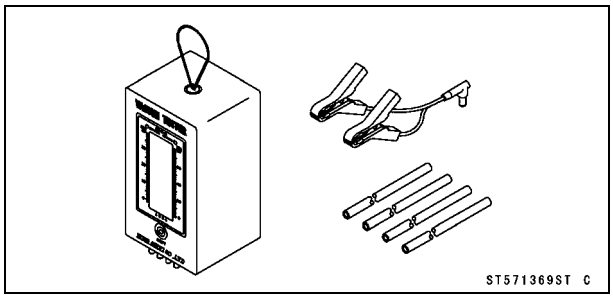

Fuel Pressure Gauge Adapter:
57001-1593

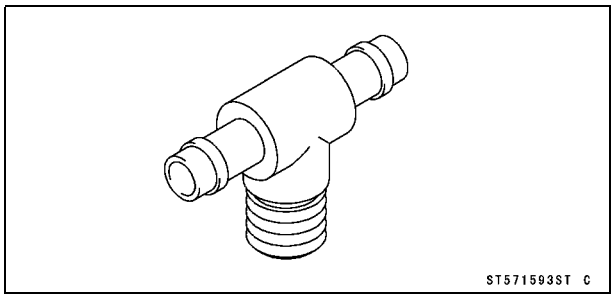

Peak Voltage Adapter:
57001-1415

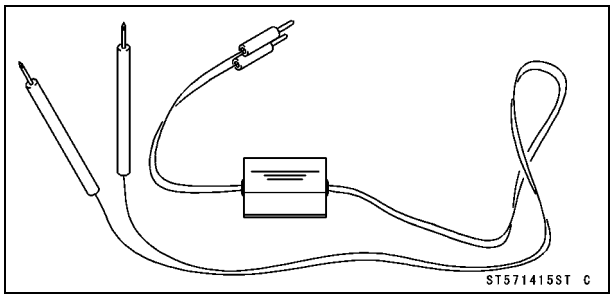

Fuel Hose:
57001-1607

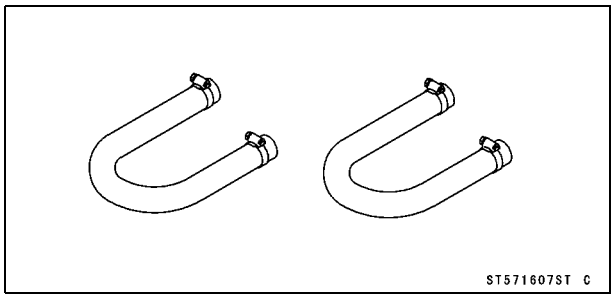

Special Tools and Sealant

Measuring Adapter:
57001-1700

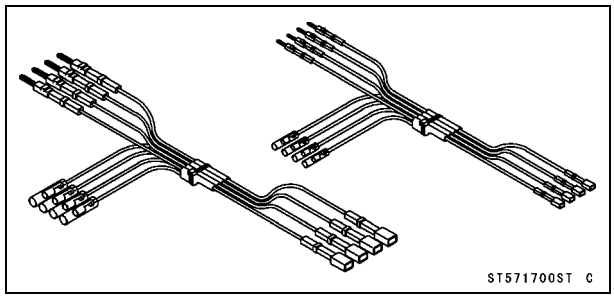

Liquid Gasket, TB1211:
56019-120

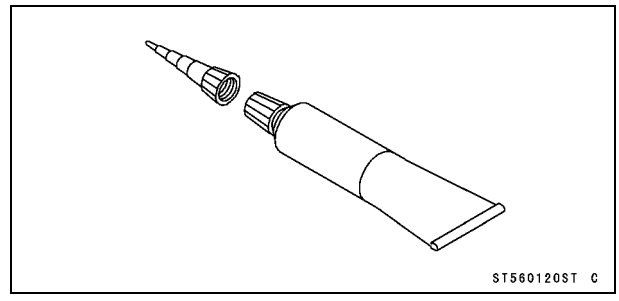

DFI Servicing Precautions

DFI Servicing Precautions

There are a number of important precautions that should be followed servicing the DFI system.

- This DFI system is designed to be used with a 12 V sealed battery as its power source. Do not use any other battery except for a 12 V sealed battery as a power source.
- Do not reverse the battery cable connections. This will damage the ECU.
- To prevent damage to the DFI parts, do not disconnect the battery cables or any other electrical connections when the ignition switch is on, or while the engine is running.
- Take care not to short the leads that are directly connected to the battery positive (+) terminal to the chassis ground.
- When charging, remove the battery from the motorcycle. This is to prevent ECU damage by excessive voltage.

- Whenever the DFI electrical connections are to be disconnected, first turn off the ignition switch, and disconnect the battery (–) terminal. Do not pull the lead, only the connector. Conversely, make sure that all the DFI electrical connections are firmly reconnected before starting the engine.
- Connect these connectors until they click [A].

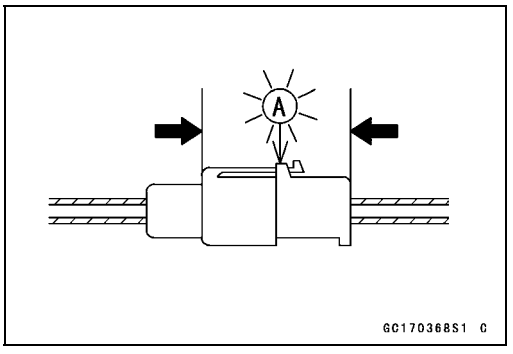

- Do not turn the ignition switch on while any of the DFI electrical connectors are disconnected. The ECU memorizes service codes.
- Do not spray water on the electrical parts, DFI parts, connectors, leads and wiring.
- If a transceiver is installed on the motorcycle, make sure that the operation of the DFI system is not influenced by electric wave radiated from the antenna. Check operation of the system with the engine at idle. Locate the antenna as far as possible away from the ECU.
- When any fuel hose is disconnected, do not turn on the ignition switch. Otherwise, the fuel pump will operate and fuel will spout from the fuel hose.
- Do not operate the fuel pump if the pump is completely dry. This is to prevent pump seizure.
- Before removing the fuel system parts, blow the outer surfaces of these parts clean with compressed air.
- When any fuel hose is disconnected, fuel may spout out by residual pressure in the fuel line. Cover the hose joint with a piece of clean cloth to prevent fuel spillage.
- When installing the fuel hoses, avoid sharp bending, kinking, flattening or twisting, and run the fuel hoses with a minimum of bending so that the fuel flow will not be obstructed.
- Run the hoses according to Cable, Wire, and Hose Routing section in the Appendix chapter.
- To prevent corrosion and deposits in the fuel system, do not add to fuel any fuel antifreeze chemicals.

DFI Servicing Precautions

○If the motorcycle is not properly handled, the high pressure inside the fuel line can cause fuel to leak or the hose to burst. Remove the fuel tank (see Fuel Tank Removal) and check the fuel hose [A].

★Replace the fuel hose if any fraying, cracks or bulges are noticed.

○To maintain the correct fuel/air mixture (F/A), there must be no intake air leaks in the DFI system. Be sure to install the oil filler plug [A] after filling the engine oil.

Torque - Oil Filler Plug: Hand-tighten

Troubleshooting the DFI System

Outline

When a problem occurs with DFI system, the yellow engine warning indicator light (LED) [A] stays on after starting the engine to alert the rider.

For models equipped with an immobilizer system, the red warning indicator light (LED) [A] and immobilizer warning indicator [B] blink, when a problem occurs in the system.

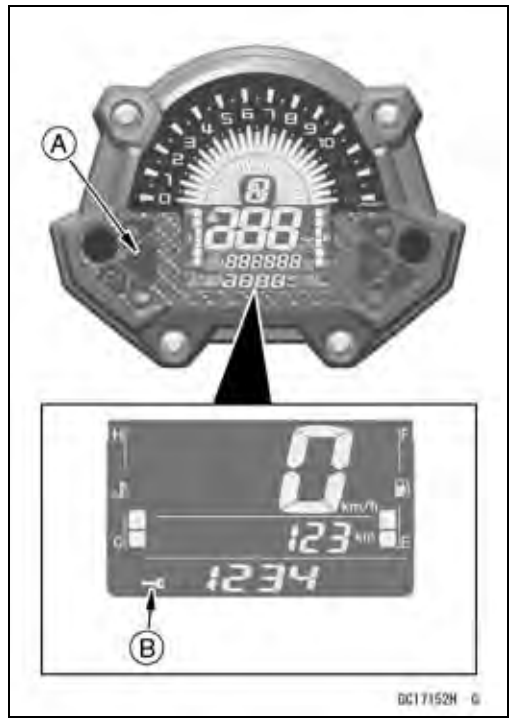

With the engine stopped and turned in the self-diagnosis mode, the service code [A] is displayed on the LCD by the number of two digits.

If the problem is with the following parts, the ECU can not recognize these problem. Therefore, the yellow engine warning indicator light (LED) does not go on, and service code is not displayed.

Fuel Pump
Fuel Pump Relay
ECU Main Relay

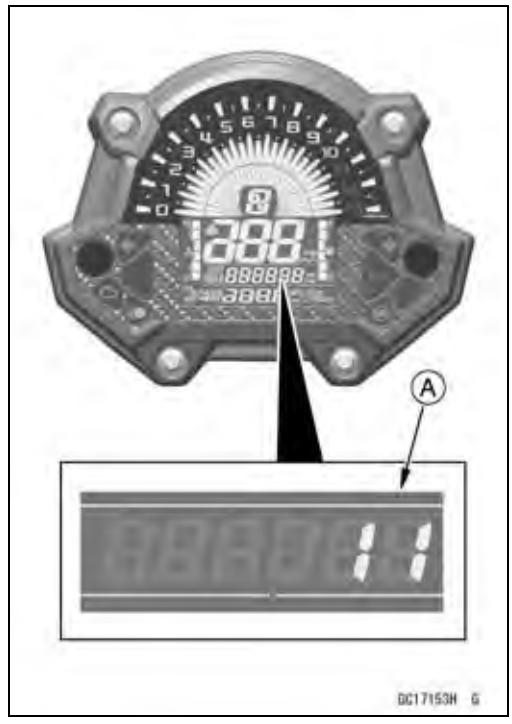

Troubleshooting the DFI System

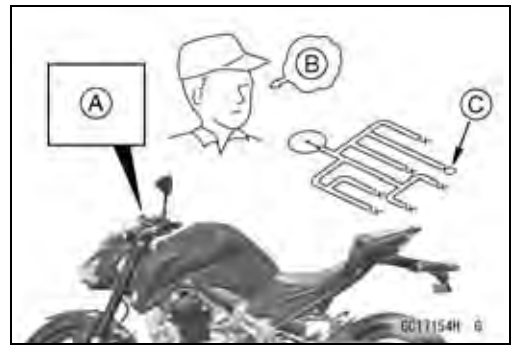

When the service code [A] is displayed, for first ask the rider about the conditions [B] of trouble, and then start to determine the cause [C] of problem.

As a pre-diagnosis inspection, check the ECU for ground and power supply, the fuel line for no fuel leaks, and for correct pressure. The pre-diagnosis items are not indicated by the yellow engine warning indicator light (LED).

Don't rely solely on the DFI self-diagnosis function, use common sense.

Even when the DFI system is operating normally, the yellow engine warning indicator light (LED) goes on may be displayed under strong electrical interference. Additional measures are not required. Turn the ignition switch off to stop the indicator light.

If the yellow engine warning indicator light (LED) of the motorcycle brought in for repair still goes on, check the service code.

When the repair has been done, the yellow engine warning indicator light (LED) goes off after the service code erasing procedure (see Service Code Erasing) is done.

When the motorcycle is down, the vehicle-down sensor operates and the ECU shuts off the fuel pump relay, fuel injectors and ignition system. The ignition switch is left on. If the starter button is pushed, the electric starter turns but the engine does not start. To start the engine again, raise the motorcycle, turn the ignition switch off, and then on.

Much of the DFI system troubleshooting work consists of confirming continuity of the wiring. The DFI parts are assembled and adjusted with precision, and it is impossible to disassemble or repair them.

Troubleshooting the DFI System

● When checking the DFI parts, use a digital meter which can be read two decimal place voltage or resistance.

○The DFI part connectors [A] have seals [B], including the ECU. When measuring the input or output voltage with the connector joined, use the needle adapter set [C]. Insert the needle adapter inside the seal until the needle adapter reaches the terminal.

Special Tool - Needle Adapter Set: 57001-1457

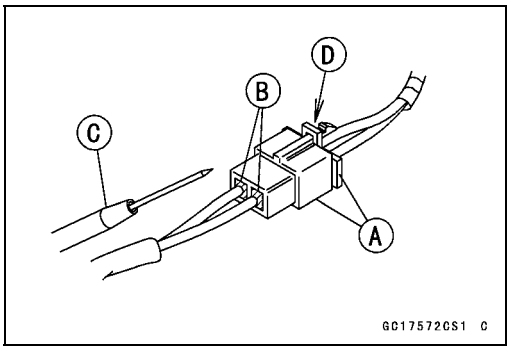

NOTICE
Insert the needle adapter straight along the terminal in the connector to prevent short-circuit between terminals.

● Make sure that measuring points are correct in the connector, noting the position of the lock [D] and the lead color before measurement. Do not reverse connections of a digital meter.

● Be careful not to short-circuit the leads of the DFI or electrical system parts by contact between adapters.

● Turn the ignition switch on and measure the voltage with the connector joined.

NOTICE
Incorrect, reverse connection or short circuit by needle adapters could damage the DFI or electrical system parts.

○After measurement, remove the needle adapters and apply silicone sealant to the seals [A] of the connector [B] for waterproofing.

Sealant - Liquid Gasket, TB1211: 56019-120

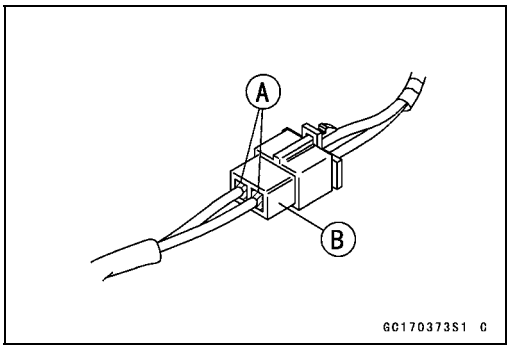

● Always check battery condition before replacing the DFI parts. A fully charged battery is a must for conducting accurate tests of the DFI system.

● Trouble may involve one or in some cases all items. Never replace a defective part without determining what CAUSED the problem. If the problem was caused by some other item or items, they too must be repaired or replaced, or the new replacement part will soon fail again.

● Measure the coil winding resistance when the DFI part is cold (at room temperature).

● Make sure all connectors in the circuit are clean and tight, and examine leads for signs of burning, fraying, short, etc. Deteriorated leads and bad connections can cause reappearance of problems and unstable operation of the DFI system.

★If any wiring is deteriorated, replace the wiring.

Troubleshooting the DFI System

● Pull each connector [A] apart and inspect it for corrosion, dirt, and damage.
★If the connector is corroded or dirty, clean it carefully. If it is damaged, replace it. Connect the connectors securely.
● Check the wiring for continuity.
○Use the wiring diagram to find the ends of the lead which is suspected of being a problem.
○Connect a tester between the ends of the leads.
★If the tester does not read about 0 Ω, the lead is defective. Replace the lead or the main harness or the subharness.

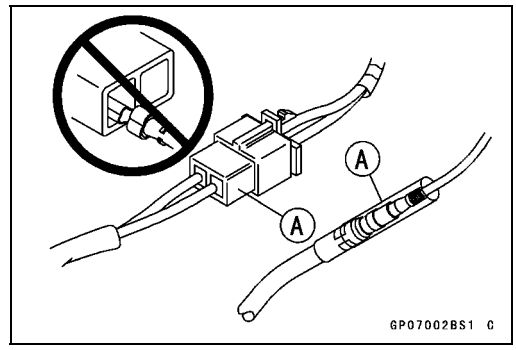

○If both ends of a harness [A] are far apart, ground [B] the one end [C], using a jumper lead [D] and check the continuity between the end [E] and the ground [F]. This enables to check a long harness for continuity. If the harness is open, repair or replace the harness.

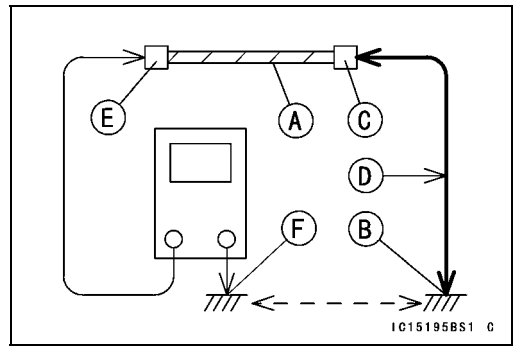

○When checking a harness [A] for short circuit, open one end [B] and check the continuity between the other end [C] and ground [D]. If there is continuity, the harness has a short circuit to ground, and it must be repaired or replaced.

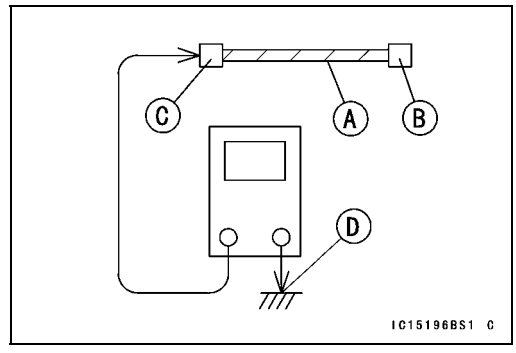

● Narrow down suspicious locations by repeating the continuity tests from the ECU connectors.
★If no abnormality is found in the wiring or connectors, the DFI parts are the next likely suspects. Check the part, starting with input and output voltages. However, there is no way to check the ECU itself.
★If an abnormality is found, replace the affected DFI part.
★If no abnormality is found in the wiring, connectors, and DFI parts, replace the ECU.

Troubleshooting the DFI System

DFI Diagnosis Flow Chart

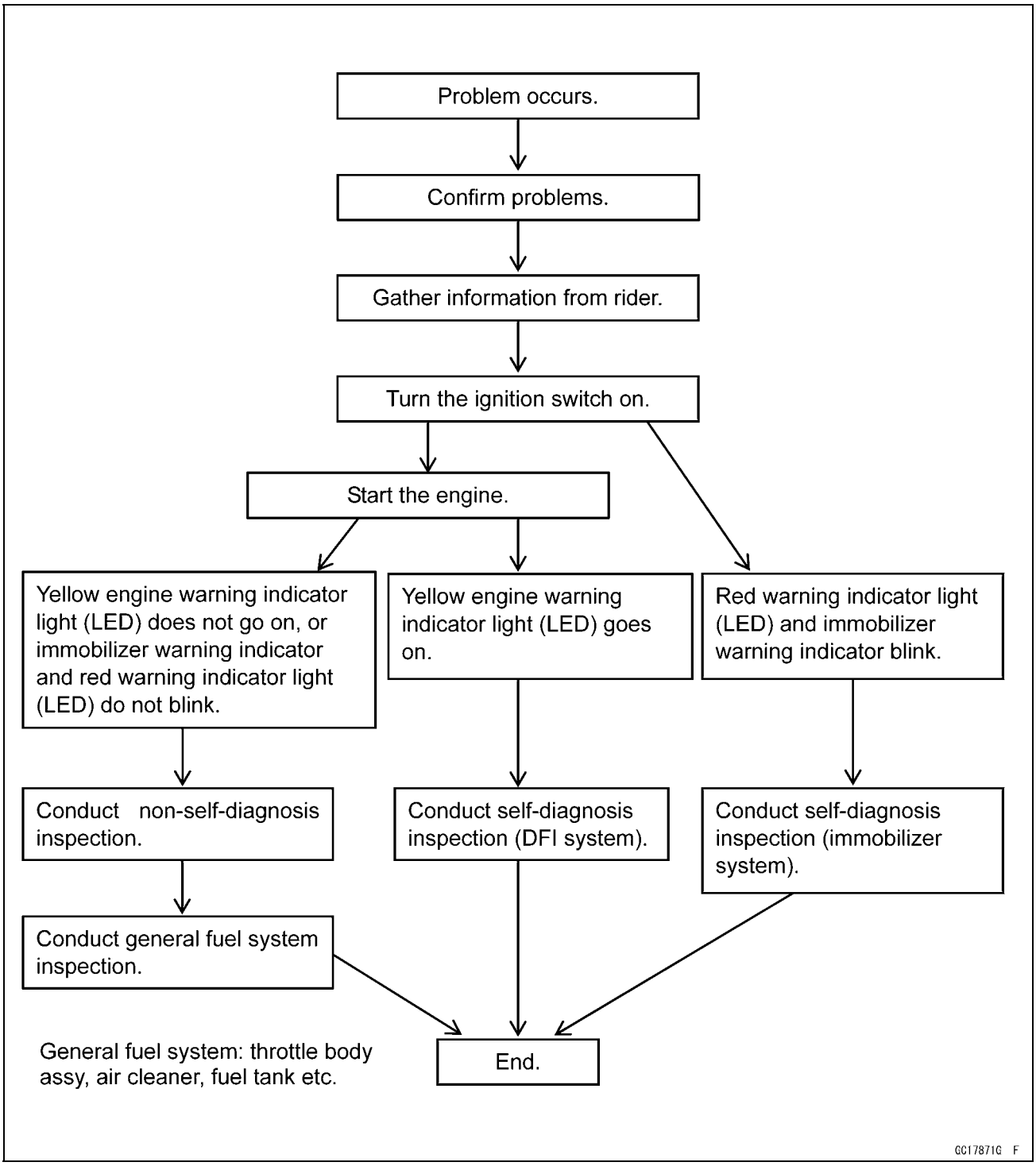

Inquiries to Rider

○Each rider reacts to problems in different ways, so it is important to confirm what kind of symptoms the rider has encountered.

○Try to find out exactly what problem occurred under exactly what conditions by asking the rider; knowing this information may help you reproduce the problem.

○The following sample diagnosis sheet will help prevent you from overlooking any areas, and will help you decide if it is a DFI system problem, or a general engine problem.

Troubleshooting the DFI System

Sample Diagnosis Sheet

Rider name:	**Registration No. (license plate No.):**	**Year of initial registration:**
Model:	**Engine No.:**	**Frame No.:**
Date problem occurred:		**Mileage:**
Environment when problem occurred.		
Weather	☐ fine, ☐ cloudy, ☐ rain, ☐ snow, ☐ always, ☐ other:	
Temperature	☐ hot, ☐ warm, ☐ cold, ☐ very cold, ☐ always, ☐ other:	
Problem frequency	☐ chronic, ☐ often, ☐once	
Road	☐ street, ☐ highway, ☐ mountain road (☐ uphill, ☐ downhill), ☐ bumpy, ☐ pebble	
Altitude	☐ normal, ☐ high (about 1 000 m or more)	
Motorcycle conditions when problem occurred.		
Yellow engine warning indicator light (LED)	☐ goes on immediately after turning the ignition switch on, and goes off after starting the engine (normal)	
	☐ goes on immediately after turning the ignition switch on, and stays on after starting the engine (DFI problem)	
	☐ does not go on after turning the ignition switch on (indicator light (LED), meter unit fault)	
Red warning indicator light (LED)	☐ Starts blinking about 3 seconds after ignition switch on, and the immobilizer warning indicator on the LCD starts blinking (immobilizer system problem).	
	☐ Does not go on about 1 seconds after ignition switch on (ECU or meter unit fault).	
	☐ light up (battery, oil pressure, water temperature, immobilizer or meter unit problem)	
Starting difficulty	☐ starter motor not rotating.	
	☐ starter motor rotating but engine do not turn over.	
	☐ starter motor and engine do not turn over.	
	☐ no fuel flow (☐ no fuel in tank, ☐ no fuel pump sound).	
	☐ no spark.	
	☐ other:	
Engine stalls	☐ right after starting.	
	☐ when opening throttle grip.	
	☐ when closing throttle grip.	
	☐ when moving off.	
	☐ when stopping the motorcycle.	
	☐ when cruising.	
	☐ other:	

Troubleshooting the DFI System

Poor running at low speed	☐ very low idle speed, ☐ very high idle speed, ☐ rough idle speed.
	☐ battery voltage is low (charge the battery).
	☐ spark plug loose (tighten it).
	☐ spark plug dirty, broken, or gap maladjusted (remedy it).
	☐ backfiring.
	☐ afterfiring.
	☐ hesitation when acceleration.
	☐ engine oil viscosity too high.
	☐ brake dragging.
	☐ engine overheating.
	☐ clutch slipping.
	☐ other:
Poor running or no power at high speed	☐ spark plug loose (tighten it).
	☐ spark plug dirty, broken, or gap maladjusted (remedy it).
	☐ spark plug incorrect (replace it).
	☐ knocking (fuel poor quality or incorrect, → use high-octane gasoline).
	☐ brake dragging.
	☐ clutch slipping.
	☐ engine overheating.
	☐ engine oil level too high.
	☐ engine oil viscosity too high.
	☐ other:

DFI System Troubleshooting Guide

NOTE

○*This is not an exhaustive list, giving every possible cause for each problem listed. It is meant simply as a rough guide to assist the troubleshooting for some of the more common difficulties in DFI system.*

○*The ECU may be involved in the DFI electrical and ignition system troubles. If these parts and circuits are checked out good, be sure to check the ECU for ground and power supply. If the ground and power supply are checked good, replace the ECU.*

Engine Won't Turn Over

Symptoms or Possible Causes	Actions (chapter)
Gear position sensor, starter lockout or side stand switch trouble	Inspect each sensor or switch (see chapter 3 or 16).
Immobilizer system trouble	Inspect (see chapter 3).
Vehicle-down sensor operated	Turn ignition switch off (see chapter 3).
Vehicle-down sensor trouble	Inspect (see chapter 3).
Crankshaft sensor trouble	Inspect (see chapter 16).
Stick coil shorted or not in good contact	Inspect or reinstall (see chapter 16).
Stick coil trouble	Inspect (see chapter 16).
Spark plug dirty, broken or gap maladjusted	Inspect and replace (see chapter 16).
Spark plug incorrect	Replace it with the correct plug (see chapter 2).
ECU ground and power supply trouble	Inspect (see chapter 3).
ECU trouble	Inspect (see chapter 3).
No or little fuel in tank	Supply fuel (see Owner's Manual).
Fuel injector trouble	Inspect and replace (see chapter 3).
Fuel pump not operating	Inspect (see chapter 3).
Fuel pump relay trouble	Inspect and replace (see chapter 3).
Fuel filter clogged	Replace fuel filter (see chapter 2).
Fuel pressure regulator trouble	Inspect fuel pressure and replace fuel pump (see chapter 3).
Fuel line clogged	Inspect and repair (see chapter 3).

Poor Running at Low Speed

Symptoms or Possible Causes	Actions (chapter)
Spark weak:	
Stick coil shorted or not in good contact	Inspect or reinstall (see chapter 16).
Stick coil trouble	Inspect (see chapter 16).
Spark plug dirty, broken or gap maladjusted	Inspect and replace (see chapter 16).
Spark plug incorrect	Replace it with the correct plug (see chapter 2).
ECU trouble	Inspect (see chapter 3).
Fuel/air mixture incorrect:	
Little fuel in tank	Supply fuel (see Owner's Manual).
Air cleaner clogged, poorly sealed, or missing	Clean element or inspect sealing (see chapter 2).
Air duct loose	Reinstall (see chapter 3).
Throttle body assy holder loose	Reinstall (see chapter 3).
Throttle body assy dust seal damage	Replace (see chapter 3).
Fuel injector O-ring damage	Replace (see chapter 3).
Fuel filter clogged	Replace fuel filter (see chapter 2).

DFI System Troubleshooting Guide

Symptoms or Possible Causes	Actions (chapter)
Fuel pressure regulator trouble	Inspect fuel pressure and replace fuel pump (see chapter 3).
Fuel line clogged	Inspect and repair (see chapter 3).
Intake air pressure sensor #1 trouble	Inspect (see chapter 3).
Intake air pressure sensor #2 trouble	Inspect (see chapter 3).
Water temperature sensor trouble	Inspect (see chapter 3).
Intake air temperature sensor trouble	Inspect (see chapter 3).
Main throttle sensor trouble	Inspect (see chapter 3).
Subthrottle sensor trouble	Inspect (see chapter 3).
Subthrottle valve actuator trouble	Inspect (see chapter 3).
Unstable (rough) idling:	
Fuel pressure too low or too high	Inspect (see chapter 3).
Fuel injector trouble	Inspect (see chapter 3).
Main throttle sensor trouble	Inspect (see chapter 3).
Subthrottle sensor trouble	Inspect (see chapter 3).
Subthrottle valve actuator trouble	Inspect (see chapter 3).
Engine vacuum not synchronizing	Inspect and adjust (see chapter 2).
Intake air pressure sensor #1 trouble	Inspect (see chapter 3).
Intake air pressure sensor #2 trouble	Inspect (see chapter 3).
Water temperature sensor trouble	Inspect (see chapter 3).
Intake air temperature sensor trouble	Inspect (see chapter 3).
Engine stalls easily:	
Spark plug dirty, broken or gap maladjusted	Inspect and replace (see chapter 16).
Stick coil trouble	Inspect (see chapter 16).
Main throttle sensor trouble	Inspect (see chapter 3).
Subthrottle sensor trouble	Inspect (see chapter 3).
Subthrottle valve actuator trouble	Inspect (see chapter 3).
Intake air pressure sensor #1 trouble	Inspect (see chapter 3).
Intake air pressure sensor #2 trouble	Inspect (see chapter 3).
Water temperature sensor trouble	Inspect (see chapter 3).
Intake air temperature sensor trouble	Inspect (see chapter 3).
Fuel pump trouble	Inspect (see chapter 3).
Fuel injector trouble	Inspect (see chapter 3).
Fuel pressure too low or too high	Inspect (see chapter 3).
Fuel pressure regulator trouble	Inspect fuel pressure and replace fuel pump (see chapter 3).
Fuel line clogged	Inspect and repair (see chapter 3).
Poor acceleration:	
Fuel pressure too low	Inspect (see chapter 3).
Water or foreign matter in fuel	Change fuel. Inspect and clean fuel system (see chapter 3).
Fuel filter clogged	Replace fuel filter (see chapter 2).
Fuel pump trouble	Inspect (see chapter 3).
Fuel injector trouble	Inspect (see chapter 3).
Main throttle sensor trouble	Inspect (see chapter 3).

DFI System Troubleshooting Guide

Symptoms or Possible Causes	Actions (chapter)
Subthrottle sensor trouble	Inspect (see chapter 3).
Subthrottle valve actuator trouble	Inspect (see chapter 3).
Intake air pressure sensor #1 trouble	Inspect (see chapter 3).
Intake air pressure sensor #2 trouble	Inspect (see chapter 3).
Water temperature sensor trouble	Inspect (see chapter 3).
Intake air temperature sensor trouble	Inspect (see chapter 3).
Spark plug dirty, broken or gap maladjusted	Inspect and replace (see chapter 16).
Stick coil trouble	Inspect (see chapter 16).
Stumble:	
Fuel pressure too low	Inspect (see chapter 3).
Fuel injector trouble	Inspect (see chapter 3).
Main throttle sensor trouble	Inspect (see chapter 3).
Subthrottle sensor trouble	Inspect (see chapter 3).
Subthrottle valve actuator trouble	Inspect (see chapter 3).
Intake air pressure sensor #1 trouble	Inspect (see chapter 3).
Intake air pressure sensor #2 trouble	Inspect (see chapter 3).
Water temperature sensor trouble	Inspect (see chapter 3).
Intake air temperature sensor trouble	Inspect (see chapter 3).
Surge:	
Unstable fuel pressure	Fuel pressure regulator trouble (Inspect and replace fuel pump) or kinked fuel line (Inspect and replace fuel pump) (see chapter 3).
Fuel injector trouble	Inspect (see chapter 3).
Water temperature sensor trouble	Inspect (see chapter 3).
Backfiring when deceleration:	
Spark plug dirty, broken or gap maladjusted	Inspect and replace (see chapter 16).
Fuel pressure too low	Inspect (see chapter 3).
Fuel pump trouble	Inspect (see chapter 3).
Main throttle sensor trouble	Inspect (see chapter 3).
Subthrottle sensor trouble	Inspect (see chapter 3).
Subthrottle valve actuator trouble	Inspect (see chapter 3).
Intake air pressure sensor #1 trouble	Inspect (see chapter 3).
Intake air pressure sensor #2 trouble	Inspect (see chapter 3).
Water temperature sensor trouble	Inspect (see chapter 3).
Intake air temperature sensor trouble	Inspect (see chapter 3).
Air switching valve trouble	Inspect and replace (see chapter 16).
Air suction valve trouble	Inspect and replace (see chapter 5).
After fire:	
Spark plug burned or gap maladjusted	Replace (see chapter 2).
Fuel injector trouble	Inspect (see chapter 3).
Intake air pressure sensor #1 trouble	Inspect (see chapter 3).
Intake air pressure sensor #2 trouble	Inspect (see chapter 3).
Water temperature sensor trouble	Inspect (see chapter 3).
Intake air temperature sensor trouble	Inspect (see chapter 3).

DFI System Troubleshooting Guide

Symptoms or Possible Causes	Actions (chapter)
Other:	
Intermittent any DFI fault and its recovery	Check that DFI connectors are clean and tight, and examine leads for signs of burning or fraying (see chapter 3).

Poor Running or No Power at High Speed

Symptoms or Possible Causes	Actions (chapter)
Firing incorrect:	
Stick coil shorted or not in good contact	Inspect or reinstall (see chapter 16).
Stick coil trouble	Inspect (see chapter 16).
Spark plug dirty, broken or gap maladjusted	Inspect and replace (see chapter 16).
Spark plug incorrect	Replace it with the correct plug (see chapter 2).
ECU trouble	Inspect (see chapter 3).
Fuel/air mixture incorrect:	
Air cleaner clogged, poorly sealed, or missing	Clean element or inspect sealing (see chapter 2).
Air duct loose	Reinstall (see chapter 3).
Throttle body assy holder loose	Reinstall (see chapter 3).
Throttle body assy dust seal damage	Replace (see chapter 3).
Water or foreign matter in fuel	Change fuel. Inspect and clean fuel system (see chapter 3).
Fuel injector O-ring damage	Replace (see chapter 3).
Fuel injector clogged	Inspect and repair (see chapter 3).
Fuel line clogged	Inspect and repair (see chapter 3).
Fuel pump operates intermittently and often DFI fuse blows.	Fuel pump bearings may wear. Replace the fuel pump (see chapter 3).
Fuel pump trouble	Inspect (see chapter 3).
Intake air pressure sensor #1 trouble	Inspect (see chapter 3).
Intake air pressure sensor #2 trouble	Inspect (see chapter 3).
Cracked or obstructed intake air pressure sensor #1 and #2 vacuum hoses	Inspect and repair or replace (see chapter 3).
Water temperature sensor trouble	Inspect (see chapter 3).
Intake air temperature sensor trouble	Inspect (see chapter 3).
Main throttle sensor trouble	Inspect (see chapter 3).
Subthrottle sensor trouble	Inspect (see chapter 3).
Subthrottle valve actuator trouble	Inspect (see chapter 3).
Knocking:	
Fuel poor quality or incorrect	Fuel change (Use the gasoline recommended in the Owner's Manual).
Spark plug incorrect	Replace it with the correct plug (see chapter 2).
Stick coil trouble	Inspect (see chapter 16).
ECU trouble	Inspect (see chapter 3).
Engine vacuum not synchronizing	Inspect and adjust (see chapter 2).
Intake air pressure sensor #1 trouble	Inspect (see chapter 3).
Intake air pressure sensor #2 trouble	Inspect (see chapter 3).
Water temperature sensor trouble	Inspect (see chapter 3).

DFI System Troubleshooting Guide

Symptoms or Possible Causes	Actions (chapter)
Intake air temperature sensor trouble	Inspect (see chapter 3).
Miscellaneous:	
Subthrottle sensor trouble	Inspect (see chapter 3).
Subthrottle valve actuator trouble	Inspect (see chapter 3).
Throttle valves will not fully open	Inspect throttle cables and lever linkage (see chapter 3).
Engine overheating - Water temperature sensor or crankshaft sensor trouble	(see Overheating of Troubleshooting Guide in chapter 17)
Air switching valve trouble	Inspect and replace (see chapter 16).
Air suction valve trouble	Inspect and replace (see chapter 5).
Exhaust Smokes Excessively:	
(Black smoke)	
Air cleaner element clogged	Clean element (see chapter 2).
Fuel pressure too high	Inspect (see chapter 3).
Fuel injector trouble	Inspect (see chapter 3).
Water temperature sensor trouble	Inspect (see chapter 3).
Intake air temperature sensor trouble	Inspect (see chapter 3).
(Brown smoke)	
Air duct loose	Reinstall (see chapter 3).
Fuel pressure too low	Inspect (see chapter 3).
Water temperature sensor trouble	Inspect (see chapter 3).
Intake air temperature sensor trouble	Inspect (see chapter 3).

Self-Diagnosis

Self-Diagnosis Outline

The self-diagnosis system is monitoring the following mechanisms.

DFI System and Ignition System
Immobilizer System (Equipped Models)

The following indicator lights (LED) are used for warning indicators of below table.

LED Color	Warning Indicators
Red [A]	Immobilizer (Equipped Models)
Yellow [B]	FI

The self-diagnosis system has two modes and can be switched to another mode by operating the meter unit.

User Mode

The ECU notifies the rider of troubles in DFI system, ignition system and immobilizer system (equipped models) by lighting or blinking the yellow engine warning indicator light (LED) [A], red warning indicator light (LED) [B] and immobilizer warning indicator [C] when DFI, ignition and immobilizer system parts are faulty, and initiates fail-safe function. In case of serious troubles, ECU stops the injection and ignition operations.

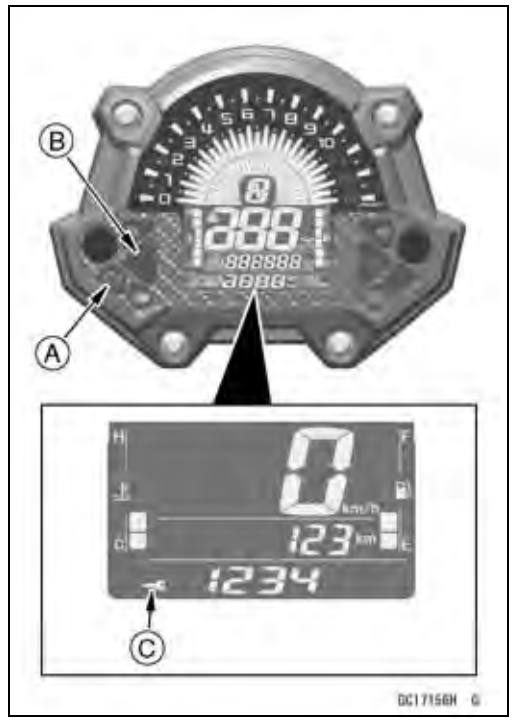

Dealer Mode

The LCD displays the service code(s) [A] to show the problem(s) which the above system has at the moment of diagnosis.

Self-Diagnosis

Self-Diagnosis Procedures

NOTE

○*Use a fully charged battery when conducting self-diagnosis. Otherwise, the warning indicator light (LED) and indicator do not light or blink.*

● Turn the ignition switch on and start the engine.

○When a problem occurs with DFI system and ignition system, the yellow engine warning indicator light (LED) [A] stays on after starting the engine to alert the rider.

○When a problem occurs with immobilizer system (equipped models), the red warning indicator light (LED) [A] and immobilizer warning indicator [B] blink.

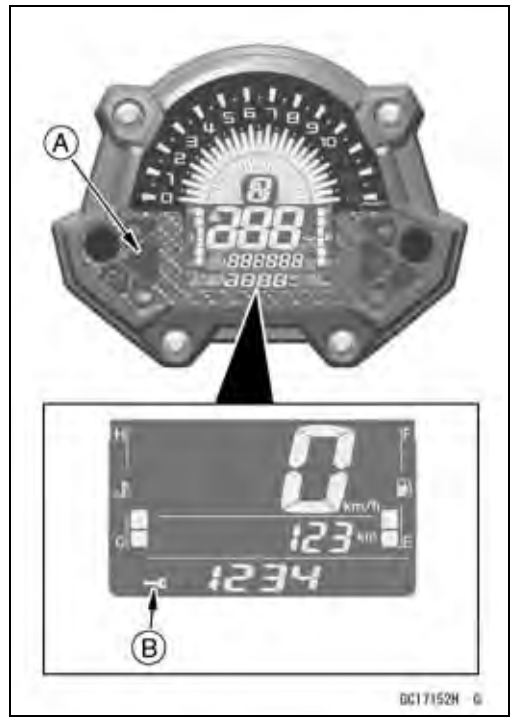

● Push the left meter button [A] to display the odometer.

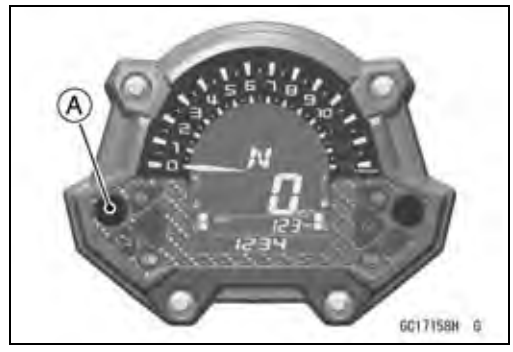

● Push the left [A] and right [B] meter buttons for more than two seconds.

● The service code [C] is displayed on the LCD by the number of two digits.

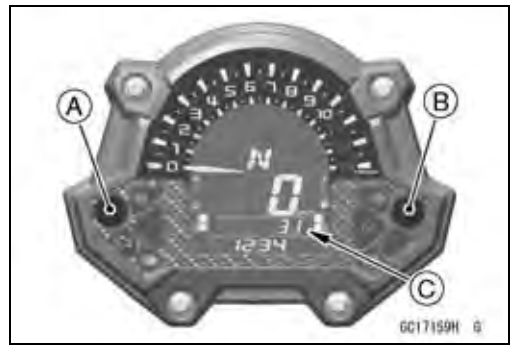

Self-Diagnosis

● Any of the following procedures ends self-diagnosis.
○When the service code is displayed on the LCD, push the left and right meter buttons for more than two seconds. The display will return to the previous display.
○When the ignition switch is turned off.

Self-Diagnosis Flow Chart

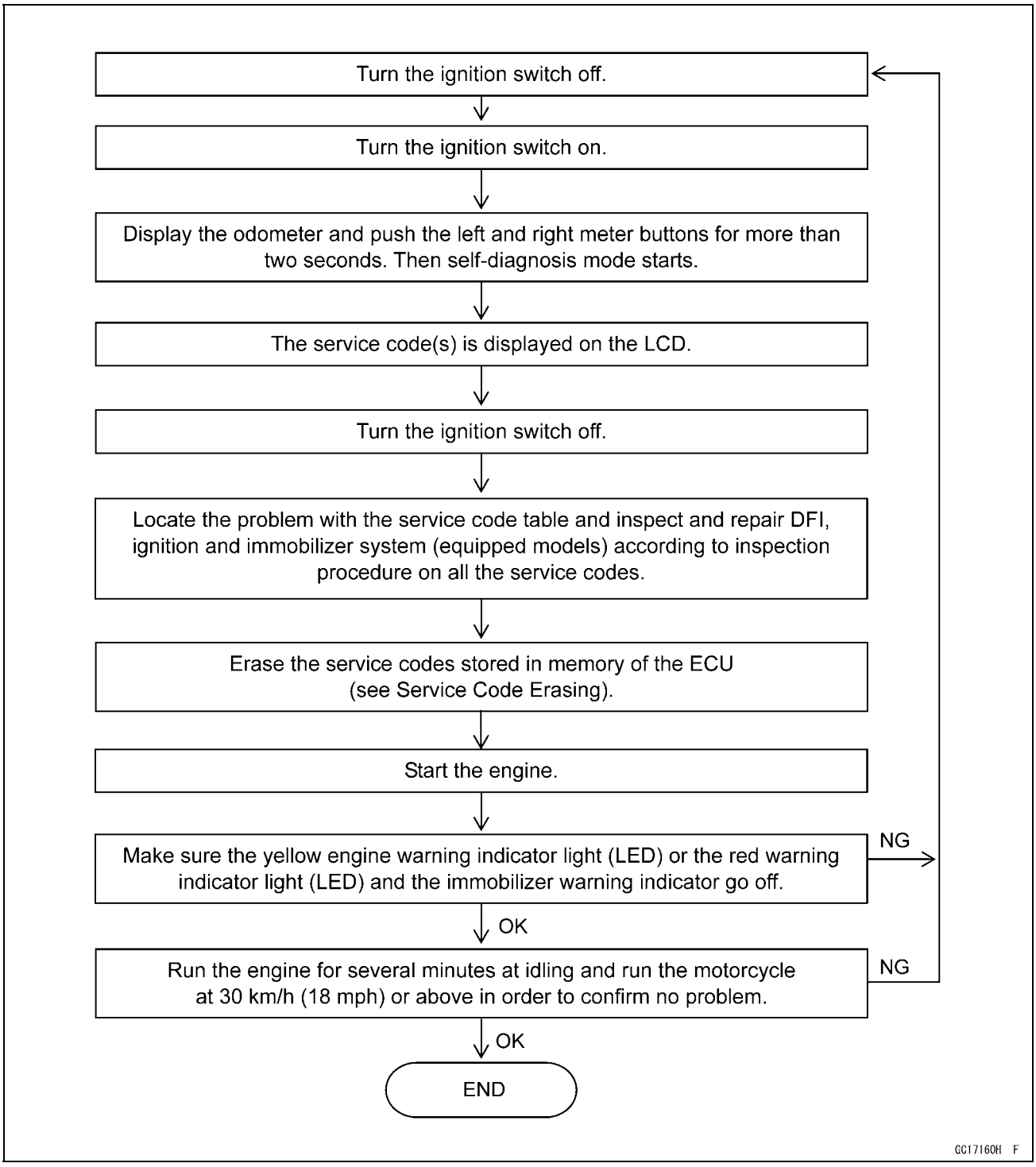

Self-Diagnosis

Service Code Reading

○The service code(s) is displayed on the LCD by the number of two digits.

○When there are a number of problems, all the service codes can be stored and the display will begin starting from the lowest number service code in the numerical order.

○Then after completing all codes, the display is repeated until the ignition switch is turned off or left and right meter buttons is pushed for more than two seconds.

○For example, if three problems occurred in the order of 56, 11, 24, the service codes are displayed (each two seconds) from the lowest number in the order listed as shown below.

(11 → 24 → 56) → (11 → 24 → 56) → · · · (repeated)

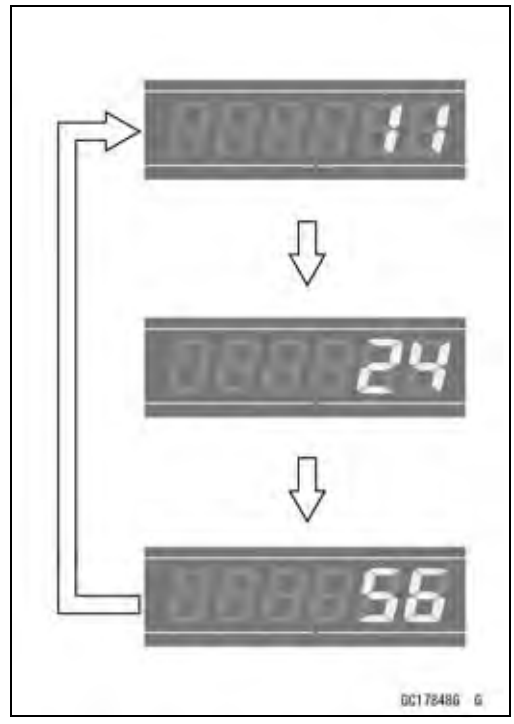

Service Code Erasing

● The service codes stored in memory of the ECU can be erased using Kawasaki Diagnostic System (KDS Ver.3).

★If the Kawasaki Diagnostic System (KDS Ver.3) is not available, do the following procedures.

1. Turn on the ignition switch and start the engine.
2. Keep the idling speed more than 30 seconds.
3. Run the vehicle more than 5 minutes at a speed of 40 km/h (25 mph) or more.
   Be sure to keep the engine running during procedures 2 and 3 for more than 10 minutes in total.
4. Turn the ignition switch off.
5. Repeat the above procedures 3 times.
6. Start the engine and check that the yellow engine warning indicator light (LED) goes off.

Service Code Table

○The service codes of the immobilizer system appear to system equipped models.

Service Codes	DTC (Diagnostic Trouble Code)	System	Problems
11	P0120	FI	Main throttle sensor malfunction, wiring open or short
	P0123		
12	P0105	FI	Intake air pressure sensor #1 malfunction, wiring open or short
	P0107		
13	P0110	FI	Intake air temperature sensor malfunction, wiring open or short
	P0112		
14	P0115	FI	Water temperature sensor malfunction, wiring open or short
	P0117		
16	P2226	FI	Intake air pressure sensor #2 malfunction, wiring open or short
	P2227		
	P2228		
21	P0335	FI	Crankshaft sensor malfunction, wiring open or short
24	P2158	FI	Rear wheel rotation sensor malfunction, wiring open or short

Self-Diagnosis

Service Codes	DTC (Diagnostic Trouble Code)	System	Problems
25	P0914	FI	Gear position sensor malfunction, wiring open or short
	P0915		
	P0916		
31	C0064	FI	Vehicle-down sensor malfunction, wiring open or short
32	P0220	FI	Subthrottle sensor malfunction, wiring open or short
	P0223		
33	P0130	FI	Oxygen sensor malfunction or inactivate, wiring open or short
	P0132		
35	–	Immobilizer	Immobilizer amplifier malfunction (Equipped Models)
36	–	Immobilizer	Blank key detection (Equipped Models)
39	–	FI	ECU communication error
41	P0201	FI	Fuel injector #1 malfunction, wiring open or short
42	P0202	FI	Fuel injector #2 malfunction, wiring open or short
43	P0203	FI	Fuel injector #3 malfunction, wiring open or short
44	P0204	FI	Fuel injector #4 malfunction, wiring open or short
51	P0351	FI	Stick coil #1 malfunction, wiring open or short
52	P0352	FI	Stick coil #2 malfunction, wiring open or short
53	P0353	FI	Stick coil #3 malfunction, wiring open or short
54	P0354	FI	Stick coil #4 malfunction, wiring open or short
56	P0480	FI	Radiator fan relay malfunction, wiring open or short
62	P2100	FI	Subthrottle valve actuator malfunction, wiring open or short
64	P0410	FI	Air switching valve malfunction, wiring open or short
67	P0030	FI	Oxygen sensor heater malfunction, wiring open or short
94	P0170	FI	Fuel supply system malfunction
3A	P0443	FI	Purge valve malfunction, wiring open or short (Equipped Models)

Notes:

○The ECU may be involved in these problems. If all the parts and circuits checked out good, be sure to check the ECU for ground and power supply. If the ground and power supply are checked good, replace the ECU.

○When no service code is displayed, the electrical parts of the DFI system has no fault, and the mechanical parts of the DFI system and the engine are suspect.

○DTC (Diagnostic Trouble Code) is displayed on the Kawasaki Diagnostic System (KDS Ver.3) and the Generic Scan Tool (GST).

Self-Diagnosis

Backups

○The ECU takes the following measures to prevent engine damage when the DFI, ignition or immobilizer system parts have troubles.

Service Codes	Parts or Function	Output Signal Usable Range or Criteria	Backups by ECU
11	Main Throttle Sensor	Output Voltage 0.2 ~ 4.8 V	If the main throttle sensor system fails (the output voltage is out of the usable range, wiring short or open), the ECU locks ignition timing into the ignition timing at closed throttle position and sets the DFI in the D-J method (1). The ECU stops the feedback mode of the oxygen sensor.
12	Intake Air Pressure Sensor #1	Intake Air Pressure (Absolute) Pv = 60 ~ 900 mmHg	If the intake air pressure sensor #1 system fails (the signal is out of the usable range, wiring short or open), the ECU sets the DFI in the α-N method (2). The ECU stops the feedback mode of the oxygen sensor.
13	Intake Air Temperature Sensor	Intake Air Temperature Ta = –30 ~ +120°C	If the intake air temperature sensor system fails (the signal is out of the usable range, wiring short or open), the ECU sets Ta at 40°C. The ECU stops the feedback mode of the oxygen sensor.
14	Water Temperature Sensor	Water Temperature Tw = –30 ~ +120°C	If the water temperature sensor system fails (the signal is out of the usable range, wiring short or open), the ECU sets Tw at 80°C and the radiator fan operates. The ECU stops the feedback mode of the oxygen sensor.
16	Intake Air Pressure Sensor #2	Intake Air Pressure (Absolute) Pv = 60 ~ 900 mmHg	If the intake air pressure sensor #2 system fails (the signal is out of the usable range, wiring short or open), the ECU sets Pa at 760 mmHg (the standard atmospheric pressure). The ECU stops the feedback mode of the oxygen sensor.
21	Crankshaft Sensor	Crankshaft sensor must send 22 signals to the ECU at the one cranking.	If the crankshaft sensor fails, the engine stops by itself.
24	Rear Wheel Rotation Sensor	Rear wheel rotation sensor must send 45 signals to the ECU at the 1 rotation of the wheel.	–
25	Gear Position Sensor	Output Voltage 0.2 ~ 4.8 V	If the gear position sensor system fails (no signal, wiring short or open), the ECU set the top (6th) gear position.
31	Vehicle -down Sensor	Output Voltage Vd = 0.10 ~ 4.84 V	If the vehicle-down sensor system has failures (the output voltage is out of the usable range, wiring short or open), the ECU shuts off the fuel pump relay, the fuel injectors and the ignition system.
32	Subthrottle Sensor	Output Voltage 0.15 ~ 4.85 V	If the subthrottle sensor system fails (the output voltage is out of the usable range, wiring short or open), the ECU drive the subthrottle valve to the full closed position, and it stops the current to the subthrottle valve actuator.

Self-Diagnosis

Service Codes	Parts or Function	Output Signal Usable Range or Criteria	Backups by ECU
33	Oxygen Sensor	The oxygen sensor is active and sensor must send signals (output voltage) continuously to the ECU.	If the oxygen sensor is not activated, the ECU stops the feedback mode of the oxygen sensor.
35	Immobilizer Amplifier (Equipped Models)	–	If the immobilizer system fails (no signal, wiring short or open), the vehicle does not start, and does not run.
36	Ignition Key	The ignition key must use register key.	If the blank key or broken key is used, the vehicle does not start the engine.
39	ECU	The communication error between the ECU and meter unit	–
41	Fuel Injector #1*	The injector must send signals continuously to the ECU.	If the injector #1 fails (no signal, wiring short or open), the ECU shuts off the signal to the injector. Fuel is not supplied to the cylinder #1, though the engine keeps running. The ECU stops the feedback mode of the oxygen sensor.
42	Fuel Injector #2*	The injector must send signals continuously to the ECU.	If the injector #2 fails (no signal, wiring short or open), the ECU shuts off the signal to the injector. Fuel is not supplied to the cylinder #2, though the engine keeps running. The ECU stops the feedback mode of the oxygen sensor.
43	Fuel Injector #3*	The injector must send signals continuously to the ECU.	If the injector #3 fails (no signal, wiring short or open), the ECU shuts off the signal to the injector. Fuel is not supplied to the cylinder #3, though the engine keeps running. The ECU stops the feedback mode of the oxygen sensor.
44	Fuel Injector #4*	The injector must send signals continuously to the ECU.	If the injector #4 fails (no signal, wiring short or open), the ECU shuts off the signal to the injector. Fuel is not supplied to the cylinder #4, though the engine keeps running. The ECU stops the feedback mode of the oxygen sensor.
51	Stick Coil #1*	The ECU sends signals (output voltage) continuously to the stick coil.	If the stick coil #1 primary winding has failures (no signal, wiring short or open), the ECU shuts off the injector #1 to stop fuel to the cylinder #1, though the engine keeps running. The ECU stops the feedback mode of the oxygen sensor.
52	Stick Coil #2*	The ECU sends signals (output voltage) continuously to the stick coil.	If the stick coil #2 primary winding has failures (no signal, wiring short or open), the ECU shuts off the injector #2 to stop fuel to the cylinder #2, though the engine keeps running. The ECU stops the feedback mode of the oxygen sensor.

Self-Diagnosis

Service Codes	Parts or Function	Output Signal Usable Range or Criteria	Backups by ECU
53	Stick Coil #3*	The ECU sends signals (output voltage) continuously to the stick coil.	If the stick coil #3 primary winding has failures (no signal, wiring short or open), the ECU shuts off the injector #3 to stop fuel to the cylinder #3, though the engine keeps running. The ECU stops the feedback mode of the oxygen sensor.
54	Stick Coil #4*	The ECU sends signals (output voltage) continuously to the stick coil.	If the stick coil #4 primary winding has failures (no signal, wiring short or open), the ECU shuts off the injector #4 to stop fuel to the cylinder #4, though the engine keeps running. The ECU stops the feedback mode of the oxygen sensor.
56	Radiator Fan Relay	When the radiator fan relay is OFF, the relay is opened.	–
62	Subthrottle Valve Actuator	The actuator operates open and close of the subthrottle valve by the pulse signal from the ECU.	If the subthrottle valve actuator fails (the signal is out to the usable range, wiring short or open), the ECU stops the current to the actuator.
64	Air Switching Valve	The air switching valve controls the flow of the secondary air by opening and shutting the solenoid valve.	–
67	Oxygen Sensor Heater	The oxygen sensor heater raise temperature of the sensor for its earlier activation.	If the oxygen sensor heater fails (wiring short or open), the ECU stops the current to the heater.
94	Fuel Supply System	Fuel correction value exceeds a threshold.	–
3A	Purge Valve (Equipped Models)	The purge valve controls the flow of the purge air for the canister and shutting the solenoid valve.	If the purge valve fails (wiring short or open), the ECU stops operating purge valve.

Note:

(1): D-J Method: When the engine load is light like at idling or low speed, the ECU determines the injection quantity by calculating from the throttle vacuum (intake air pressure sensor output voltage) and engine speed (crankshaft sensor output voltage). This method is called D-J method.

(2): α-N Method: As the engine speed increases, and the engine load turns middle to heavy, the ECU determines the injection quantity by calculating from the throttle opening (throttle sensor output voltage) and the engine speed. This method is called α-N method.

*: This depends on the number of stopped cylinders.

Main Throttle Sensor (Service Code 11) (DTC P0120, P0123)

The main throttle sensor is a rotating variable resistor that change output voltage according to throttle operating. The ECU senses this voltage change and determines fuel injection quantity, and ignition timing according to engine rpm, and throttle opening.

Input Terminal [A]: BL
Output Terminal [B]: Y/W
Ground Terminal [C]: G

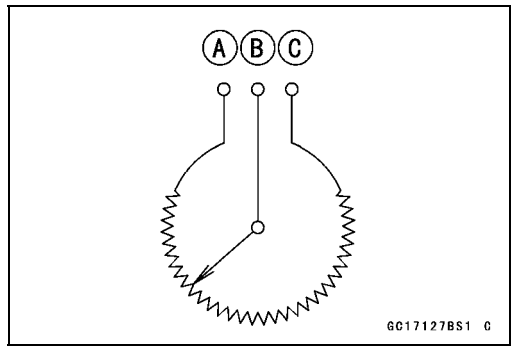

Main Throttle Sensor Removal/Adjustment

NOTICE

Do not remove or adjust the main throttle sensor [A] since it has been adjusted and set with precision at the factory.
Never drop the throttle body assy especially on a hard surface. Such a shock to the main throttle sensor can damage it.

Main Throttle Sensor Input Voltage Inspection

NOTE

○*Be sure the battery is fully charged.*

- Turn the ignition switch off.
- Disconnect the main throttle sensor connector and connect the setting adapter [A] between these connectors.

Special Tool - Throttle Sensor Setting Adapter: 57001 -1538

- Connect a digital meter to the setting adapter leads.

Main Throttle Sensor Input Voltage
Connections to Adapter:
Digital Meter (+) → W (sensor BL) lead
Digital Meter (–) → BK (sensor G) lead

- Measure the input voltage with the engine stopped and with the connector joined.
- Turn the ignition switch on.

Input Voltage
Standard: DC 4.75 ~ 5.25 V

- Turn the ignition switch off.

★If the reading is within the standard, check the main throttle sensor resistance (see Main Throttle Sensor Resistance Inspection).

Main Throttle Sensor (Service Code 11) (DTC P0120, P0123)

★If the reading is out of the standard, remove the ECU and check the wiring for continuity between main harness connectors.

○Disconnect the ECU and sensor connectors.

Wiring Continuity Inspection
ECU Connector [A] ←→
Main Throttle Sensor Connector [B]
ECU Terminal 4 [C] ←→ Sensor Terminal [D]
ECU Terminal 49 [E] ←→ Sensor Terminal [F]

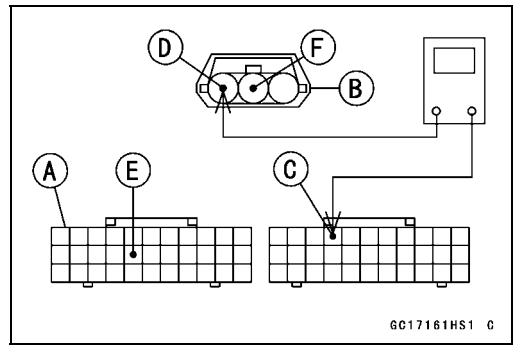

★If the wiring is good, check the ECU for its ground and power supply (see ECU Power Supply Inspection).

★If the ground and power supply are good, replace the ECU (see ECU Removal/Installation).

Main Throttle Sensor Resistance Inspection

- Turn the ignition switch off.
- Disconnect the main throttle sensor connector.
- Connect the setting adapter [A] to the sensor connector only.

Special Tool - Throttle Sensor Setting Adapter: 57001 -1538

- Measure the main throttle sensor resistance.

Main Throttle Sensor Resistance
Connections to Adapter:
W (sensor BL) lead ←→ BK (sensor G) lead

Standard: 4 ~ 6 kΩ

★If the reading is out of the standard, replace the throttle body assy (see Throttle Body Assy Removal/Installation).

★If the reading is within the standard, check the output voltage (see Main Throttle Sensor Output Voltage Inspection).

Main Throttle Sensor Output Voltage Inspection

- Measure the output voltage at the main throttle sensor in the same way as input voltage inspection, note the following.

○Disconnect the main throttle sensor connector and connect the setting adapter [A] between these connectors.

Special Tool - Throttle Sensor Setting Adapter: 57001 -1538

Main Throttle Sensor Output Voltage
Connections to Adapter:
Digital Meter (+) → R (sensor Y/W) lead
Digital Meter (–) → BK (sensor G) lead

- Start the engine and warm it up thoroughly.
- Check idle speed to ensure the throttle opening is correct (see Idle Speed Inspection in the Periodic Maintenance chapter).

Idle Speed
Standard: 1 100 ±50 r/min (rpm)

Main Throttle Sensor (Service Code 11) (DTC P0120, P0123)

● Turn the ignition switch off.
● Measure the output voltage with the engine stopped and with the connector joined.
● Turn the ignition switch on.

Output Voltage
Standard: DC 1.00 ~ 1.02 V at idle throttle opening
DC 4.05 ~ 4.48 V at full throttle opening (for reference)

NOTE

○*Open the throttle, confirm the output voltage will be raise.*
○*The standard voltage refers to the value when the voltage reading at the Input Voltage Inspection shows 5 V exactly.*
○*When the input voltage reading shows other than 5 V, derive a voltage range as follows.*
Example:
In the case of a input voltage of 4.75 V.
1.02 × 4.75 ÷ 5.00 = 0.969 V
1.06 × 4.75 ÷ 5.00 = 1.007 V
Thus, the valid range is 0.969 ~ 1.007 V

● Turn the ignition switch off.
★If the reading is out of the standard, replace the throttle body assy (see Throttle Body Assy Removal/Installation).

★If the reading is within the standard, replace the ECU and check the wiring for continuity between main harness connectors.
○Disconnect the ECU and sensor connectors.

Wiring Continuity Inspection
ECU Connector [A] ←→
Main Throttle Sensor Connector [B]
ECU Terminal 27 [C] ←→ Sensor Terminal [D]
ECU Terminal 49 [E] ←→ Sensor Terminal [F]

★If the wiring is good, check the ECU for its ground and power supply (see ECU Power Supply Inspection).
★If the ground and power supply are good, replace the ECU (see ECU Removal/Installation).

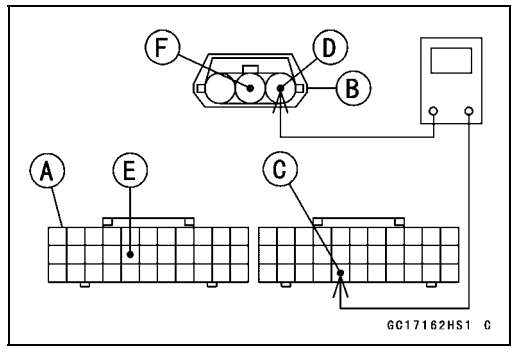

Main Throttle Sensor (Service Code 11) (DTC P0120, P0123)

Main Throttle Sensor Circuit

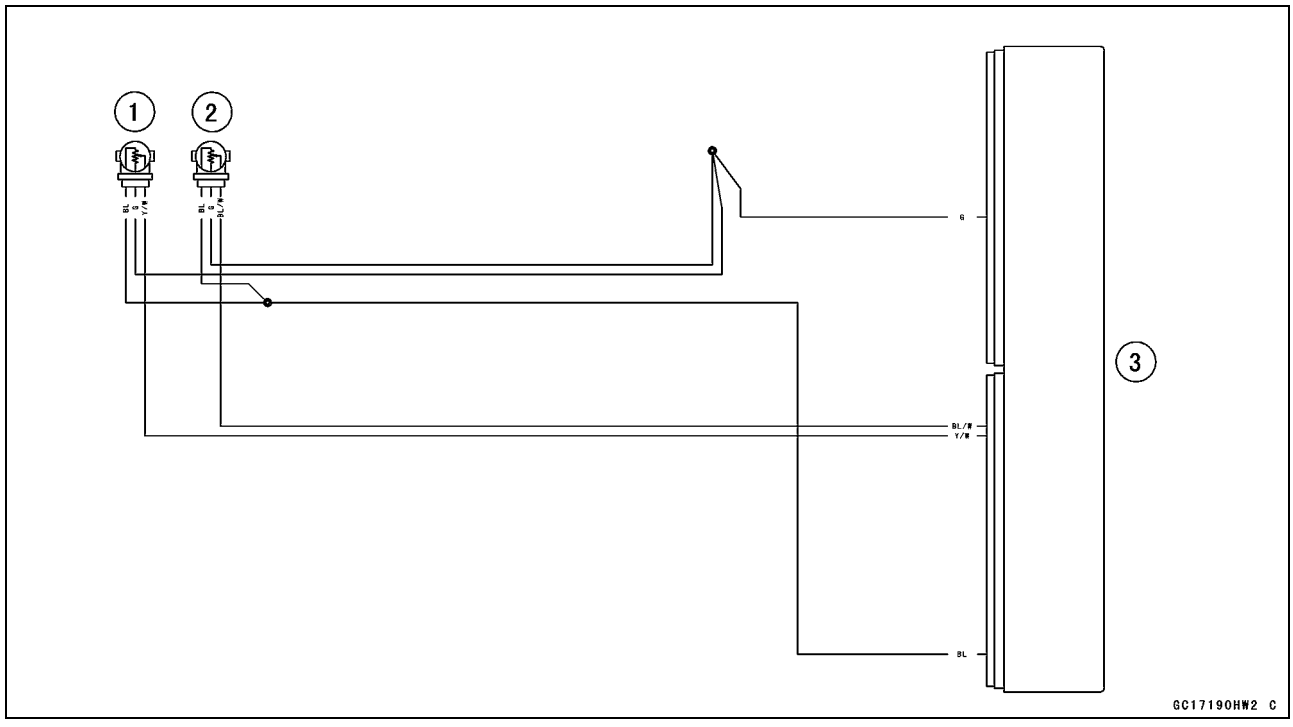

1. Main Throttle Sensor
2. Subthrottle Sensor
3. ECU

Intake Air Pressure Sensor #1 (Service Code 12) (DTC P0105, P0107)

Intake Air Pressure Sensor #1 Removal

NOTICE
Never drop the intake air pressure sensor #1 especially on a hard surface. Such a shock to the sensor can damage it.

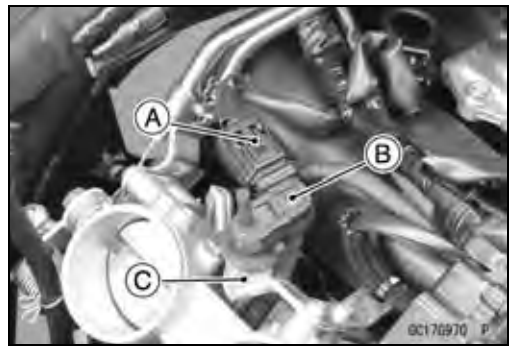

- Remove:
  Air Cleaner Housing (see Air Cleaner Housing Removal)
- Disconnect:
  Intake Air Pressure Sensor #1 Connector [A]
- Remove the intake air pressure sensor #1 [B] from the bracket [C].

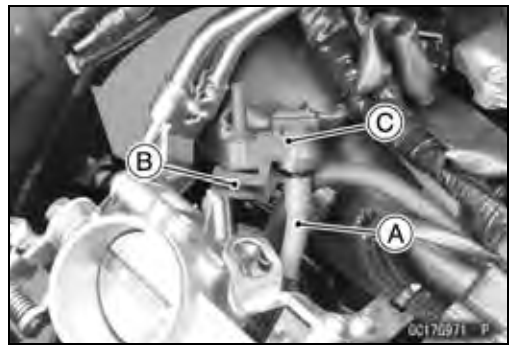

- Disconnect the vacuum hose [A].
- Remove the rubber damper [B] from the intake air pressure sensor #1 [C].

Intake Air Pressure Sensor #1 Installation

NOTE

○*The intake air pressure sensor #1 is the same part as the intake air pressure sensor #2.*

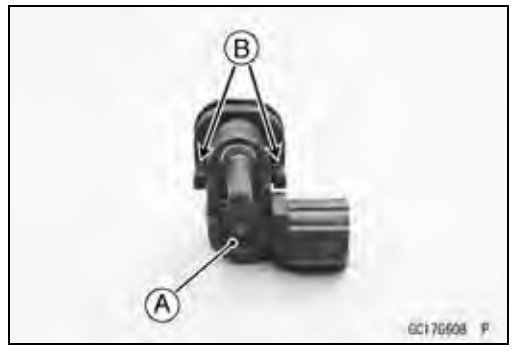

- Installation is the reverse of removal.
- Position the intake air pressure sensor #1 [A] between the projections [B] on the rubber damper.

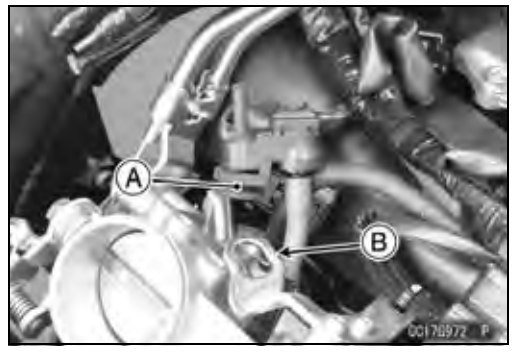

- Install the rubber damper [A] on the bracket [B].

Intake Air Pressure Sensor #1 (Service Code 12) (DTC P0105, P0107)

Intake Air Pressure Sensor #1 Input Voltage Inspection

NOTE

○*Be sure the battery is fully charged.*

- Turn the ignition switch off.
- Remove the air cleaner housing (see Air Cleaner Housing Removal).
- Disconnect the intake air pressure sensor #1 connector and connect the measuring adapter [A] between these connectors.
  Main Harness [B]
  Intake Air Pressure Sensor #1 [C]

Special Tool - Measuring Adapter: 57001-1700

- Connect a digital meter [D] to the measuring adapter leads.

Intake Air Pressure Sensor #1 Input Voltage
Connections to Adapter:
Digital Meter (+) → R (sensor BL) lead
Digital Meter (–) → BK (sensor G) lead

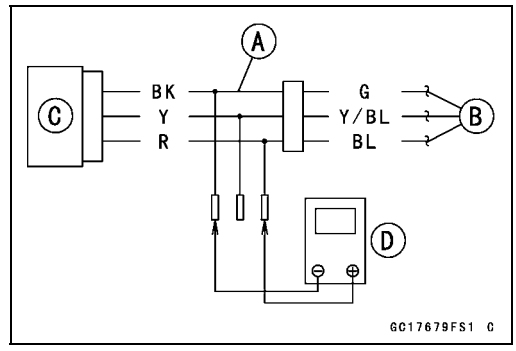

- Measure the input voltage with the engine stopped and with the connector joined.
- Turn the ignition switch on.

Input Voltage
Standard: DC 4.75 ~ 5.25 V

- Turn the ignition switch off.

★If the reading is within the standard, check the output voltage (see Intake Air Pressure Sensor #1 Output Voltage Inspection).

★If the reading is out of the standard, remove the ECU and check the wiring for continuity between main harness connectors.

○Disconnect the ECU and sensor connectors.

Wiring Continuity Inspection
ECU Connector [A] ←→
Intake Air Pressure Sensor #1 Connector [B]
ECU Terminal 4 [C] ←→ Sensor Terminal [D]
ECU Terminal 49 [E] ←→ Sensor Terminal [F]

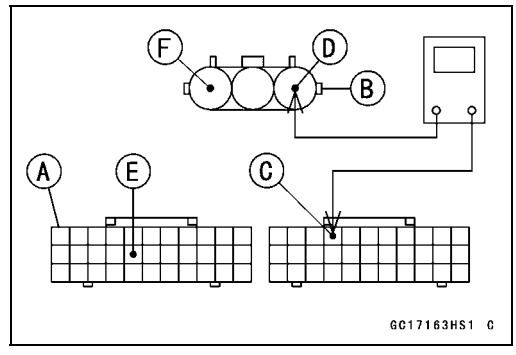

★If the wiring is good, check the ECU for its ground and power supply (see ECU Power Supply Inspection).

★If the ground and power supply are good, replace the ECU (see ECU Removal/Installation).

Intake Air Pressure Sensor #1 (Service Code 12) (DTC P0105, P0107)

Intake Air Pressure Sensor #1 Output Voltage Inspection

● Measure the output voltage at the intake air pressure sensor #1 in the same way as input voltage inspection, note the following.

○Disconnect the intake air pressure sensor #1 connector and connect the measuring adapter [A] between these connectors.

Main Harness [B]
Intake Air Pressure Sensor #1 [C]
Digital Meter [D]

Special Tool - Measuring Adapter: 57001-1700

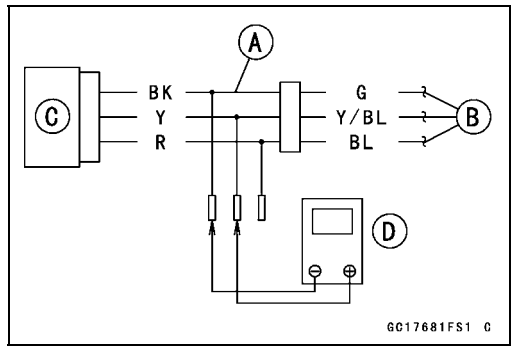

Intake Air Pressure Sensor #1 Output Voltage
Connections to Adapter:
Digital Meter (+) → Y (sensor Y/BL) lead
Digital Meter (–) → BK (sensor G) lead

● Measure the output voltage with the engine stopped and with the connector joined.

● Turn the ignition switch on.

Output Voltage

Usable Range:	**DC 3.80 ~ 4.20 V at standard atmospheric pressure (101.32 kPa, 76 cmHg)**

NOTE

○*The output voltage changes according to local atmospheric pressure.*

● Turn the ignition switch off.

★If the reading is out of the usable range, replace the sensor.

★If the reading is within the usable range, remove the ECU and check the wiring for continuity between main harness connectors.

○Disconnect the ECU and sensor connectors.

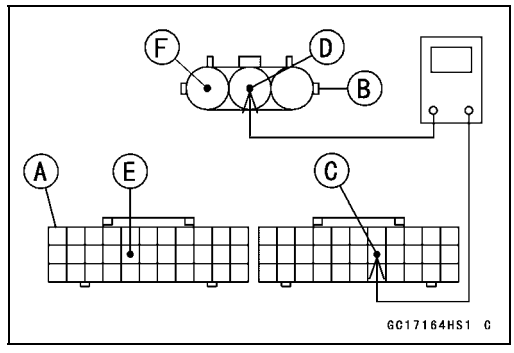

Wiring Continuity Inspection
ECU Connector [A] ←→
Intake Air Pressure Sensor #1 Connector [B]
ECU Terminal 18 [C] ←→ Sensor Terminal [D]
ECU Terminal 49 [E] ←→ Sensor Terminal [F]

Intake Air Pressure Sensor #1 (Service Code 12) (DTC P0105, P0107)

★If the wiring is good, check the sensor for various vacuum.
● Remove the intake air pressure sensor #1 [A] and disconnect the vacuum hose from the sensor.
● Connect an auxiliary hose [B] to the intake air pressure sensor #1.
● Temporarily install the intake air pressure sensor #1.
○Connect a digital meter [C], vacuum gauge [D], the fork oil level gauge [E] and the measuring adapter to the intake air pressure sensor #1.

Special Tools - Fork Oil Level Gauge: 57001-1290
Vacuum Gauge: 57001-1369
Measuring Adapter: 57001-1700

Intake Air Pressure Sensor #1 Output Voltage
Connections to Adapter:
Digital Meter (+) → Y (sensor Y/BL) lead
Digital Meter (–) → BK (sensor G) lead

○Turn the ignition switch on.
○Measure the intake air pressure sensor #1 output voltage from various vacuum readings, while pulling the handle of the fork oil level gauge.
○Check the intake air pressure sensor #1 output voltage, using the following formula and chart.

Suppose:
Pg: Vacuum Pressure (Gauge) of Throttle Body
Pl: Local Atmospheric Pressure (Absolute) measured by a barometer
Pv: Vacuum Pressure (Absolute) of Throttle Body
Vv: Sensor Output Voltage (V)

then
Pv = Pl + Pg

For example, suppose the following data is obtained:
Pg = 8 cmHg (Vacuum Gauge Reading)
Pl = 54 cmHg (Barometer Reading)
Vv = 3.2 V (Digital Meter Reading)

then
Pv = 54 + 8 = 62 cmHg (Absolute)

Plot this Pv (62 cmHg) at a point [1] on the chart and draw a vertical line through the point. Then, you can get the usable range [2] of the sensor output voltage.
Usable range = 3.08 ~ 3.48 V
Plot Vv (3.2 V) on the vertical line. → Point [3].
Results: In the chart, Vv is within the usable range and the sensor is normal.
★If the reading is out of the usable range, replace the sensor.
★If the reading is within the usable range, check the ECU for its ground and power supply (see ECU Power Supply Inspection).
★If the ground and power supply are good, replace the ECU (see ECU Removal/Installation).

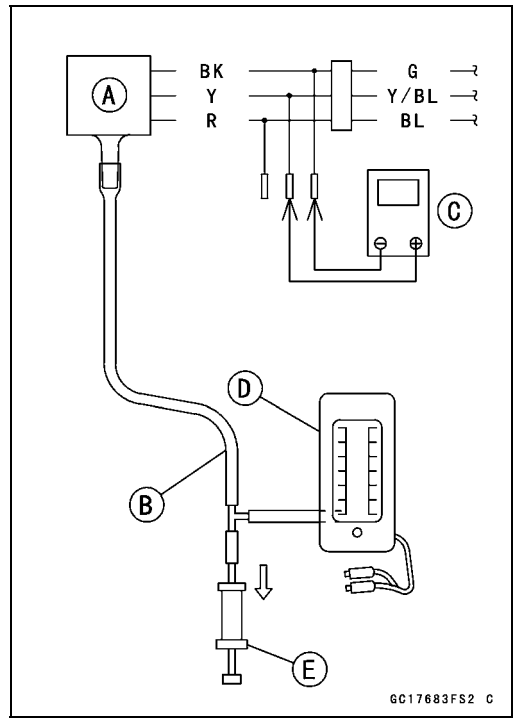

Intake Air Pressure Sensor #1 (Service Code 12) (DTC P0105, P0107)

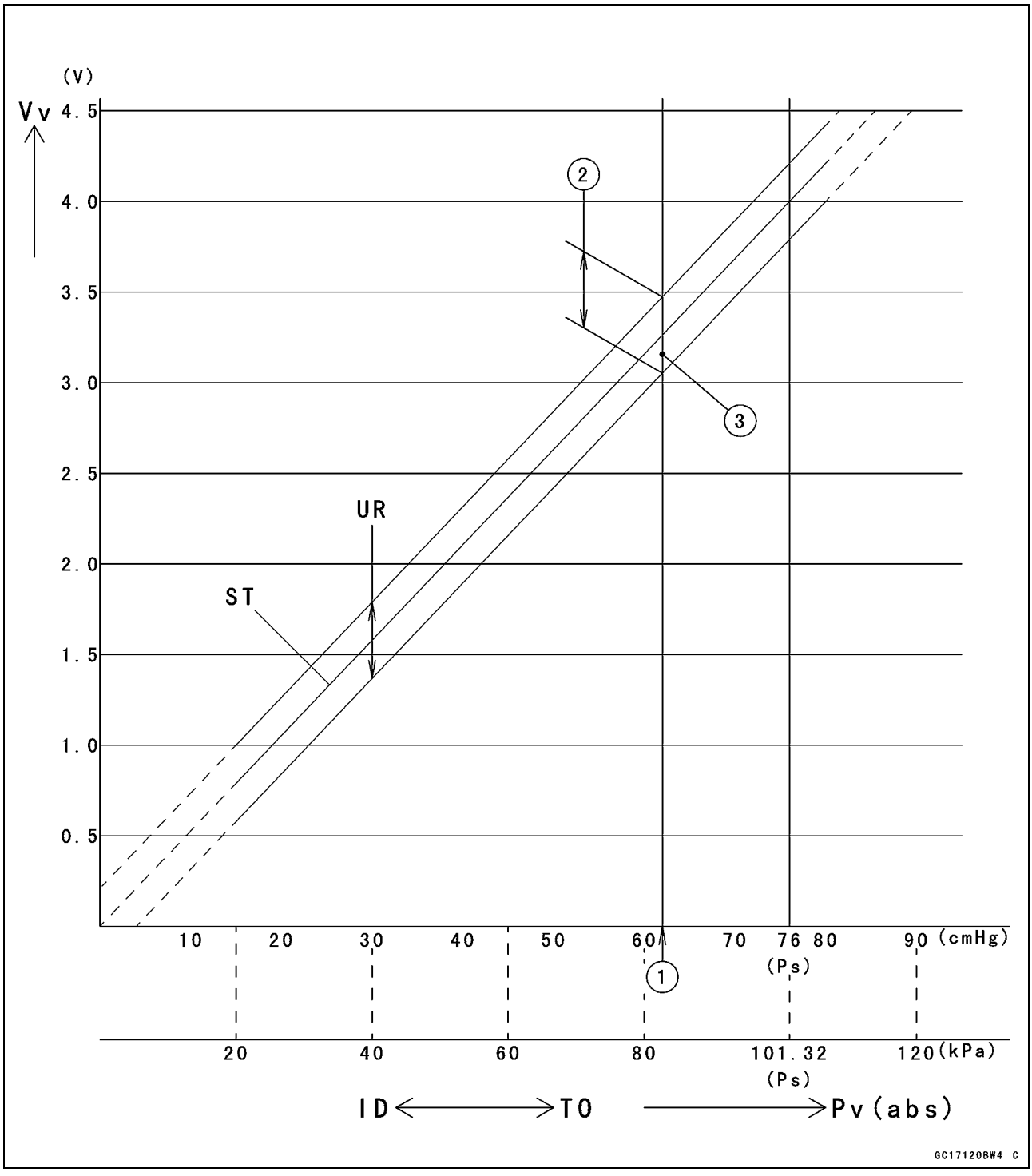

ID: Idling
Ps: Standard Atmospheric Pressure (Absolute)
Pv: Throttle Vacuum Pressure (Absolute)
ST: Standard of Sensor Output Voltage (V)
TO: Throttle Full Open
UR: Usable Range of Sensor Output Voltage (V)
Vv: Intake Air Pressure Sensor #1 Output Voltage (V) (Digital Meter Reading)

Intake Air Pressure Sensor #1 (Service Code 12) (DTC P0105, P0107)

Intake Air Pressure Sensor #1 Circuit

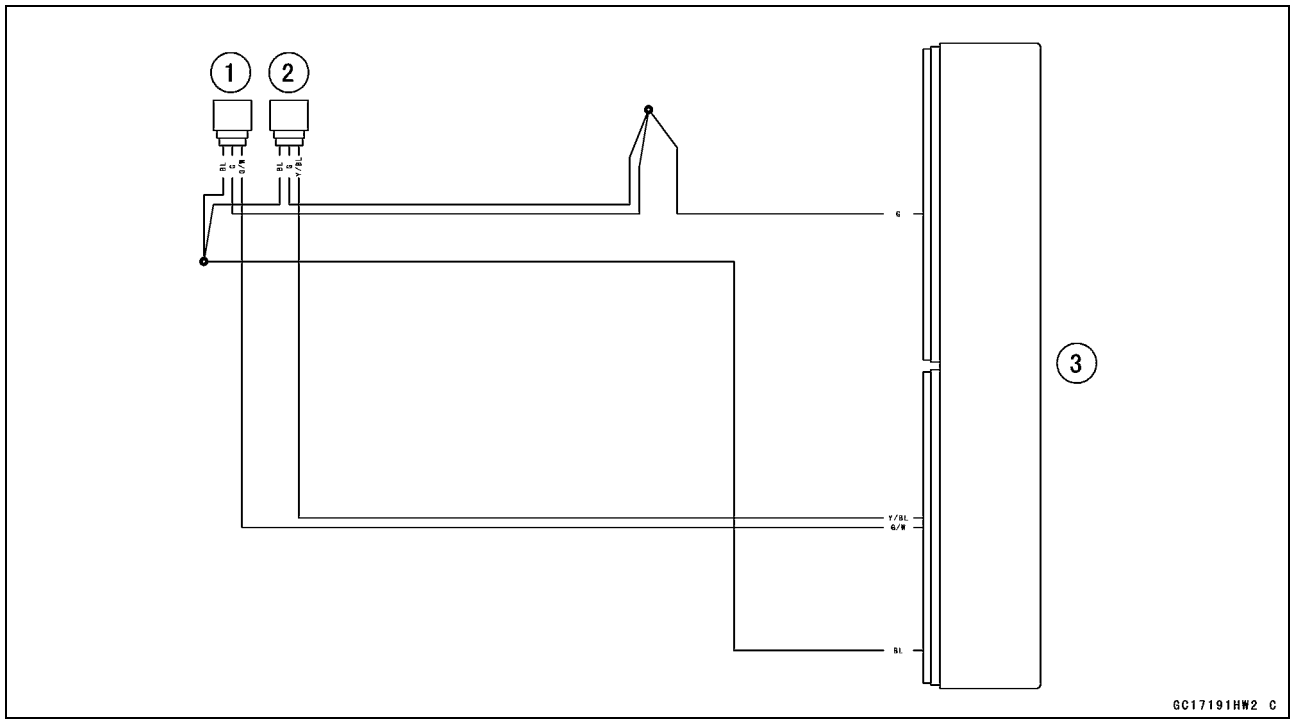

1. Intake Air Pressure Sensor #2
2. Intake Air Pressure Sensor #1
3. ECU

Intake Air Temperature Sensor (Service Code 13) (DTC P0110, P0112)

Intake Air Temperature Sensor Removal/Installation

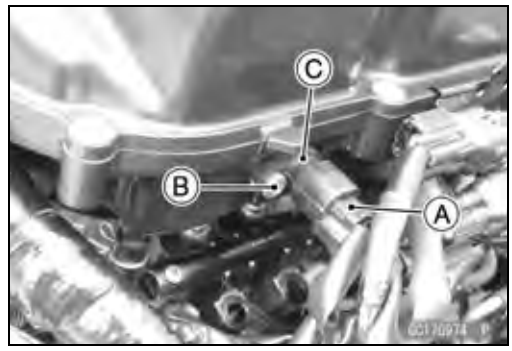

NOTICE

Never drop the intake air temperature sensor especially on a hard surface. Such a shock to the sensor can damage it.

- Remove the fuel tank (see Fuel Tank Removal).
- Disconnect the intake air temperature sensor connector [A].
- Remove:
  Intake Air Temperature Sensor Screw [B]
  Intake Air Temperature Sensor [C]

- Be sure to install the O-ring [A].
- Install the intake air temperature sensor.
- Tighten:

Torque - Intake Air Temperature Sensor Screw: 1.2 N·m (0.12 kgf·m, 11 in·lb)

- Connect the intake air temperature sensor connector.
- Install the fuel tank (see Fuel Tank Installation).

Intake Air Temperature Sensor Output Voltage Inspection

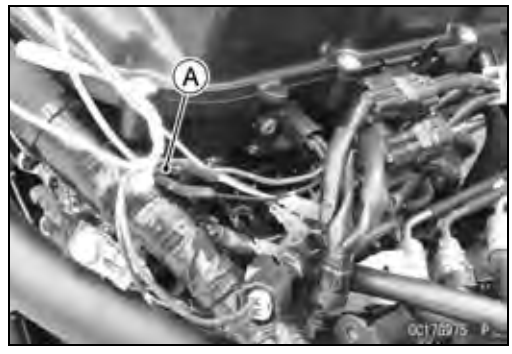

NOTE

○*Be sure the battery is fully charged.*

- Turn the ignition switch off.
- Remove the fuel tank (see Fuel Tank Removal).
- Disconnect the intake air temperature sensor connector and connect the measuring adapter [A] between these connectors as shown.
  Main Harness [B]
  Intake Air Temperature Sensor [C]

Special Tool - Measuring Adapter: 57001-1700

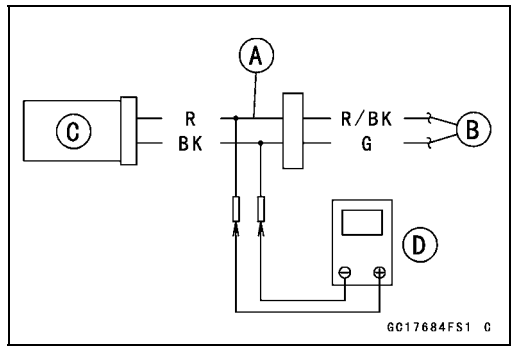

- Connect a digital meter [D] to the measuring adapter leads.

Intake Air Temperature Sensor Output Voltage
Connections to Adapter:
Digital Meter (+) → R (sensor R/BK) lead
Digital Meter (–) → BK (sensor G) lead

- Measure the output voltage with the engine stopped and the connector joined.
- Turn the ignition switch on.

Output Voltage
Standard: About DC 2.25 ~ 2.50 V @20°C (68°F)

NOTE

○*The output voltage changes according to the intake air temperature.*

Intake Air Temperature Sensor (Service Code 13) (DTC P0110, P0112)

● Turn the ignition switch off.
★If the reading is within the standard, check the ECU for its ground and power supply (see ECU Power Supply Inspection).
★If the ground and power supply are good, replace the ECU (see ECU Removal/Installation).

★If the reading is out of the standard, remove the ECU and check the wiring for continuity between main harness connectors.
○Disconnect the ECU and sensor connectors.

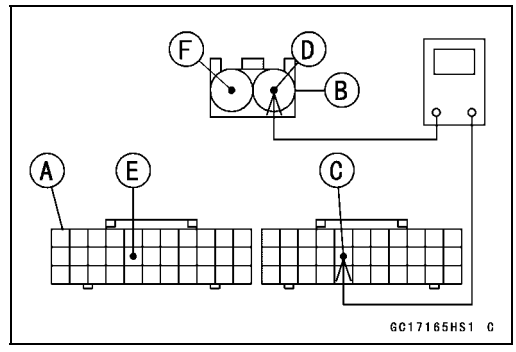

Wiring Continuity Inspection
ECU Connector [A] ←→
Intake Air Temperature Sensor Connector [B]
ECU Terminal 16 [C] ←→ Sensor Terminal [D]
ECU Terminal 49 [E] ←→ Sensor Terminal [F]

★If the wiring is good, check the intake air temperature sensor resistance (see Intake Air Temperature Sensor Resistance Inspection).

Intake Air Temperature Sensor Resistance Inspection

● Remove the intake air temperature sensor (see Intake Air Temperature Sensor Removal/Installation).
● Suspend the sensor [A] in a container of water so that the heat-sensitive portion is submerged.
● Suspend a thermometer [B] with the heat-sensitive portion [C] located in almost the same depth with the sensor.

NOTE

○*The sensor and thermometer must not touch the container side or bottom.*

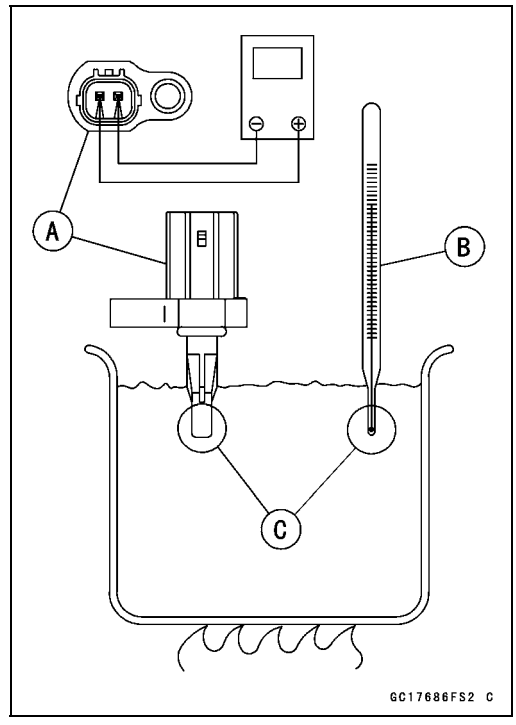

● Place the container over a source of heat and gradually raise the temperature of the water while stirring the water gently for even temperature.
● Using a digital meter, measure the internal resistance of the sensor across the terminals at the temperatures shown in the following.

Intake Air Temperature Sensor Resistance
Standard: 5.4 ~ 6.6 kΩ @0°C (32°F)
0.29 ~ 0.39 kΩ @80°C (176°F)

★If the reading is out of the standard, replace the sensor.
★If the reading is within the standard, but the problem still exists, replace the ECU (see ECU Removal/Installation).

Intake Air Temperature Sensor (Service Code 13) (DTC P0110, P0112)

Intake Air Temperature Sensor Circuit

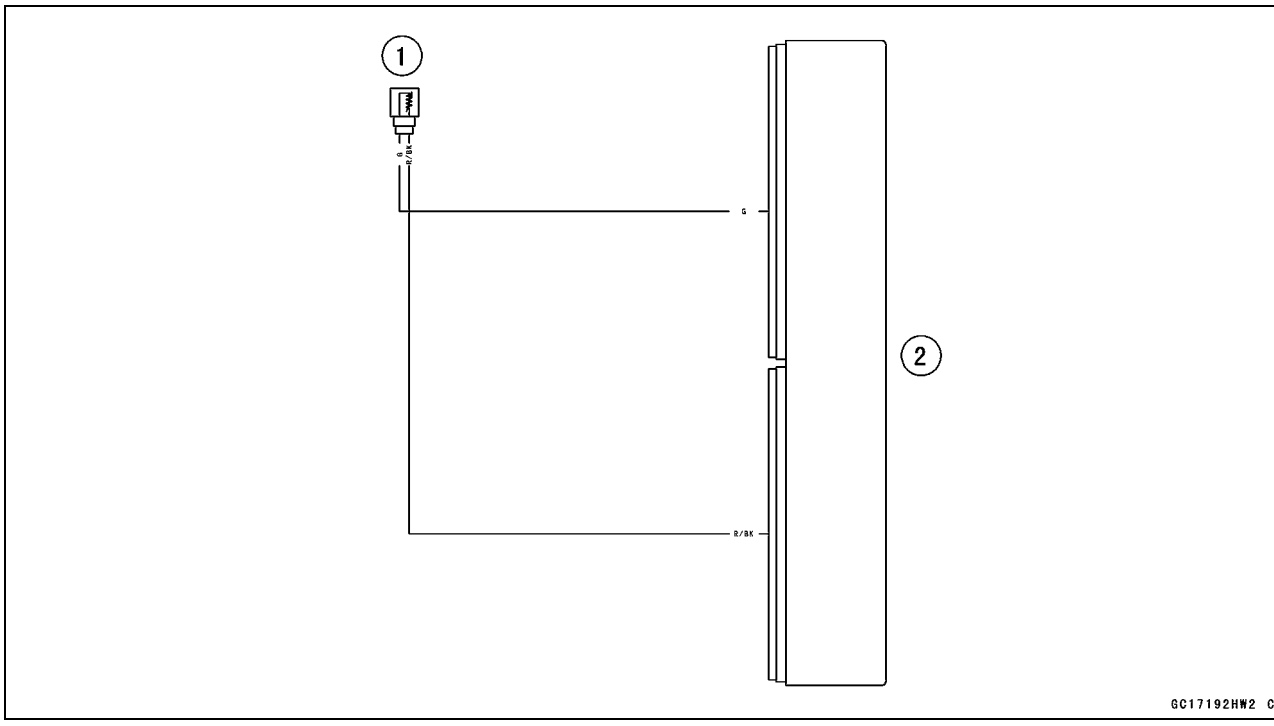

1. Intake Air Temperature Sensor
2. ECU

Water Temperature Sensor (Service Code 14) (DTC P0115, P0117)

Water Temperature Sensor Removal/Installation

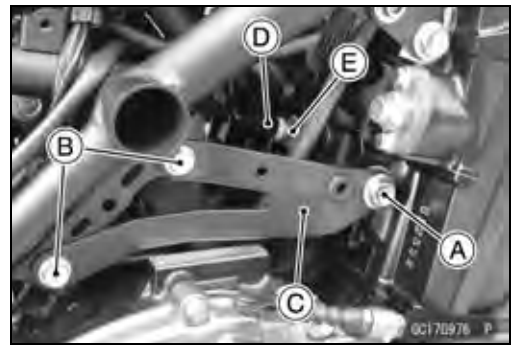

NOTICE
Never drop the water temperature sensor especially on a hard surface. Such a shock to the sensor can damage it.

- Drain the coolant (see Coolant Change in the Periodic Maintenance chapter).
- Remove:
  Right Frame Cover (see Frame Cover Removal in the Frame chapter)
  Middle Front Engine Mounting Bolt [A]
  Middle Engine Bracket Bolts [B]
  Middle Engine Bracket [C]
- Disconnect:
  Water Temperature Sensor Connector [D]
- Remove:
  Water Temperature Sensor [E] with O-ring
- Replace the O-ring with a new one.
- Tighten:

  Torque - Water Temperature Sensor: 12 N·m (1.2 kgf·m, 106 in·lb)

- Fill the engine with coolant and bleed the air from the cooling system (see Coolant Change in the Periodic Maintenance chapter).

Water Temperature Sensor (Service Code 14) (DTC P0115, P0117)

Water Temperature Sensor Output Voltage Inspection

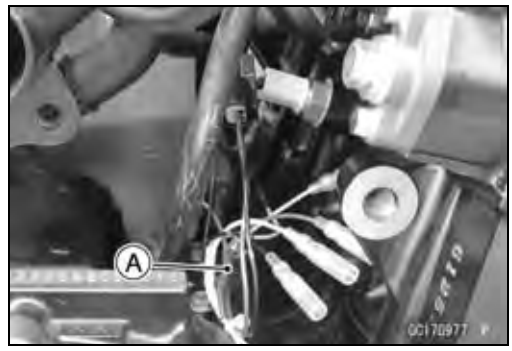

NOTE

○*Be sure the battery is fully charged.*

- Turn the ignition switch off.
- Disconnect the water temperature sensor connector (see Water Temperature Sensor Removal/Installation)
- Connect the measuring adapter [A] between these connectors as shown.
  Subharness [B]
  Water Temperature Sensor [C]

Special Tool - Measuring Adapter: 57001-1700

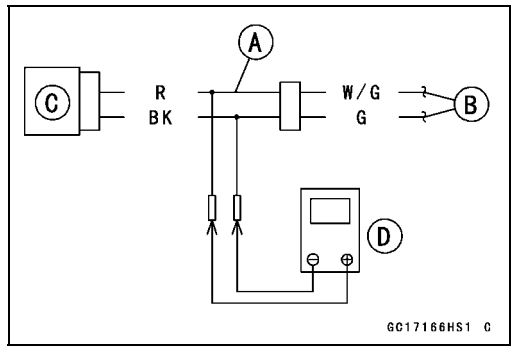

- Connect a digital meter [D] to the measuring adapter leads.

Water Temperature Sensor Output Voltage
Connections to Adapter:
Digital Meter (+) → R (sensor W/G) lead
Digital Meter (–) → BK (sensor G) lead

- Measure the output voltage with the engine stopped and with the connector joined.
- Turn the ignition switch on.

Output Voltage
Standard: About DC 2.80 ~ 2.97 V @20°C (68°F)

NOTE

○*The output voltage changes according to the coolant temperature in the engine.*

- Turn the ignition switch off.

★If the reading is within the standard, check the ECU for its ground and power supply (see ECU Power Supply Inspection).

★If the ground and power supply are good, replace the ECU (see ECU Removal/Installation).

★If the reading is out of the standard, remove the ECU and check the wiring for continuity between main and subharness connectors.

○Disconnect the ECU and sensor connectors.

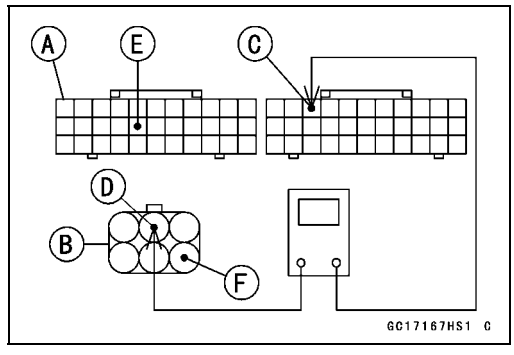

Wiring Continuity Inspection
ECU Connector [A] ←→
Subharness Connector [B]
ECU Terminal 3 [C] ←→ Connector Terminal [D]
ECU Terminal 49 [E] ←→ Connector Terminal [F]

Water Temperature Sensor (Service Code 14) (DTC P0115, P0117)

Subharness Connector [A] ←→
Water Temperature Sensor Connector [B]
Connector Terminal [C] ←→ Sensor Terminal [D]
Connector Terminal [E] ←→ Sensor Terminal [F]

★If the wiring is good, check the water temperature sensor resistance (see Water Temperature Sensor Resistance Inspection).

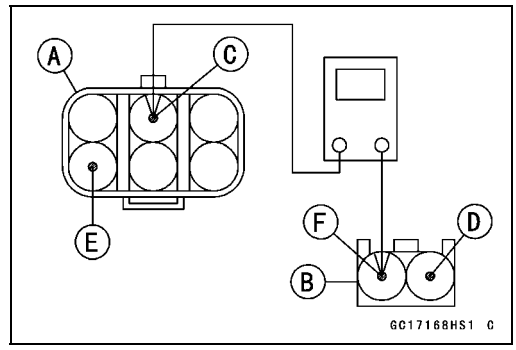

Water Temperature Sensor Resistance Inspection

● Refer to the Water Temperature Sensor Inspection in the Electrical System chapter.

★If the reading is within the standard, but the problem still exists, replace the ECU (see ECU Removal/Installation).

Water Temperature Sensor Circuit

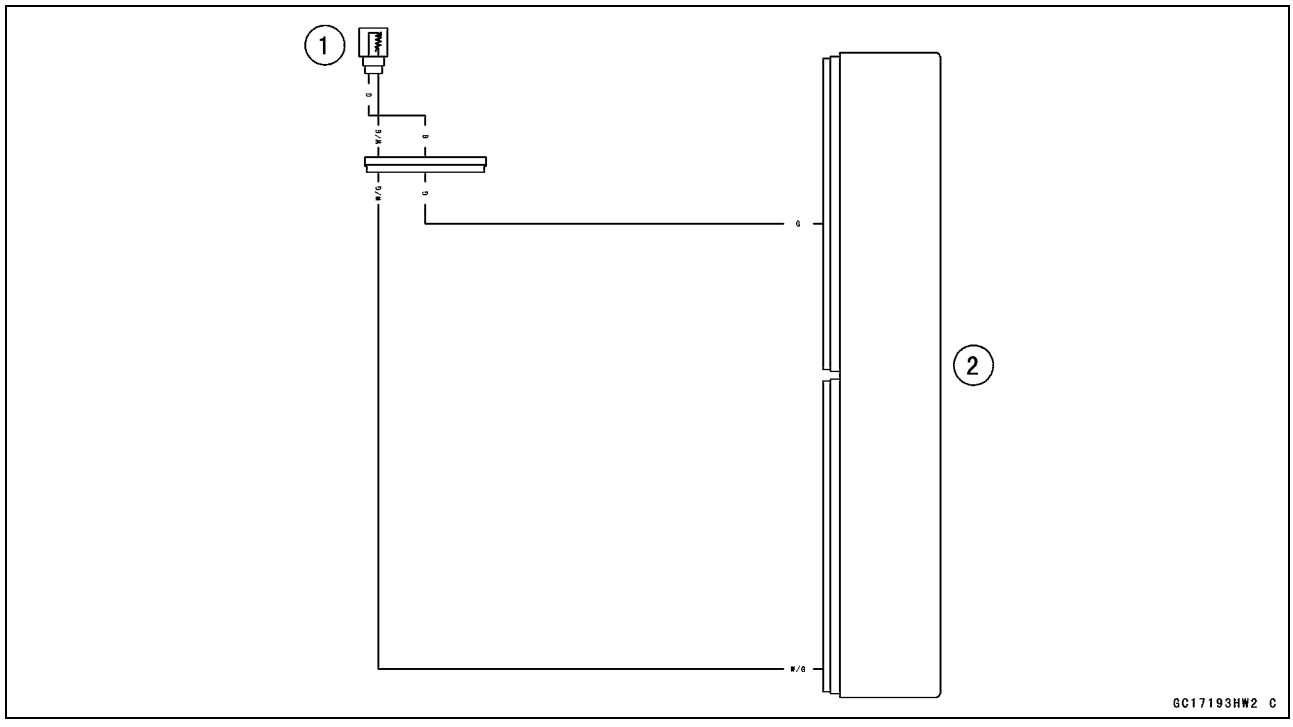

1. Water Temperature Sensor
2. ECU

Intake Air Pressure Sensor #2 (Service Code 16) (DTC P2226, P2227, P2228)

Intake Air Pressure Sensor #2 Removal

NOTICE
Never drop the intake air pressure sensor #2 especially on a hard surface. Such a shock to the sensor can damage it.

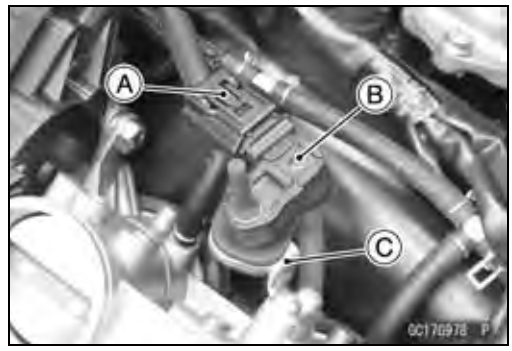

- Remove:
  Air Cleaner Housing (see Air Cleaner Housing Removal)
- Disconnect:
  Intake Air Pressure Sensor #2 Connector [A]
- Remove the intake air pressure sensor #2 [B] from the bracket [C].

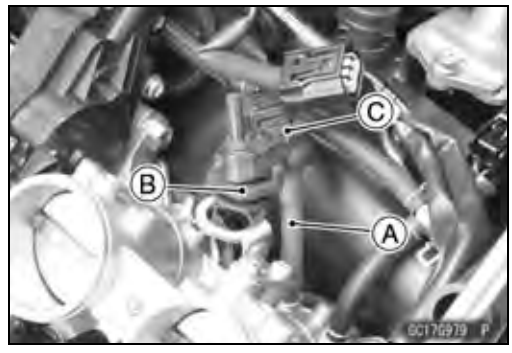

- Disconnect the vacuum hose [A].
- Remove the rubber damper [B] from the intake air pressure sensor #2 [C].

Intake Air Pressure Sensor #2 Installation

NOTE

○*The intake air pressure sensor #2 is the same part as the intake air pressure sensor #1.*

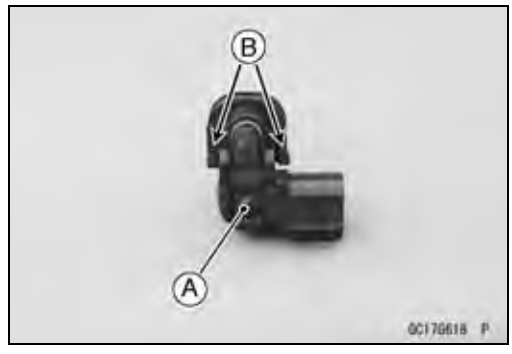

- Installation is the reverse of removal.
- Position the intake air pressure sensor #2 [A] between the projections [B] on the rubber damper.

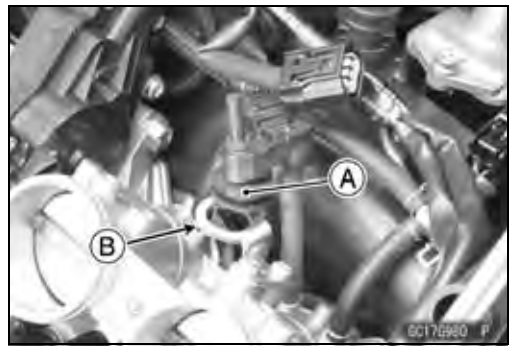

- Install the rubber damper [A] on the bracket [B].

Intake Air Pressure Sensor #2 (Service Code 16) (DTC P2226, P2227, P2228)

Intake Air Pressure Sensor #2 Input Voltage Inspection

NOTE

○*Be sure the battery is fully charged.*

- Turn the ignition switch off.
- Remove the air cleaner housing (see Air Cleaner Housing Removal).
- Disconnect the intake air pressure sensor #2 connector and connect the measuring adapter [A] between these connectors.
  Main Harness [B]
  Intake Air Pressure Sensor #2 [C]

Special Tool - Measuring Adapter: 57001-1700

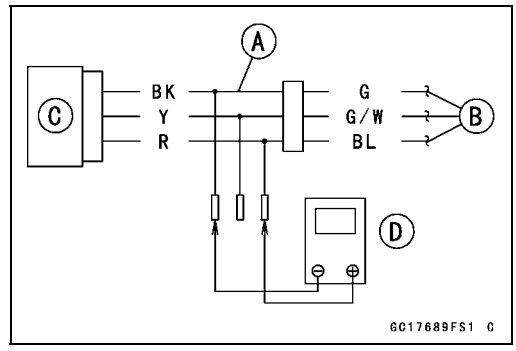

- Connect a digital meter [D] to the measuring adapter leads.

Intake Air Pressure Sensor #2 Input Voltage
Connections to Adapter:
Digital Meter (+) → R (sensor BL) lead
Digital Meter (–) → BK (sensor G) lead

- Measure the input voltage with the engine stopped and with the connector joined.
- Turn the ignition switch on.

Input Voltage
Standard: DC 4.75 ~ 5.25 V

- Turn the ignition switch off.

★If the reading is within the standard, check the output voltage (see Intake Air Pressure Sensor #2 Output Voltage Inspection).

★If the reading is out of the standard, remove the ECU and check the wiring for continuity between main harness connectors.

○Disconnect the ECU and sensor connectors.

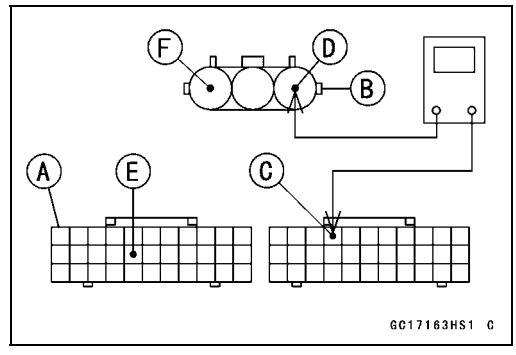

Wiring Continuity Inspection
ECU Connector [A] ←→
Intake Air Pressure Sensor #2 Connector [B]
ECU Terminal 4 [C] ←→ Sensor Terminal [D]
ECU Terminal 49 [E] ←→ Sensor Terminal [F]

★If the wiring is good, check the ECU for its ground and power supply (see ECU Power Supply Inspection).

★If the ground and power supply are good, replace the ECU (see ECU Removal/Installation).

Intake Air Pressure Sensor #2 (Service Code 16) (DTC P2226, P2227, P2228)

Intake Air Pressure Sensor #2 Output Voltage Inspection

● Measure the output voltage at the intake air pressure sensor #2 in the same way as input voltage inspection, note the following.

○Disconnect the intake air pressure sensor #2 connector and connect the measuring adapter [A] between these connectors.

Main Harness [B]
Intake Air Pressure Sensor #2 [C]
Digital Meter [D]

Special Tool - Measuring Adapter: 57001-1700

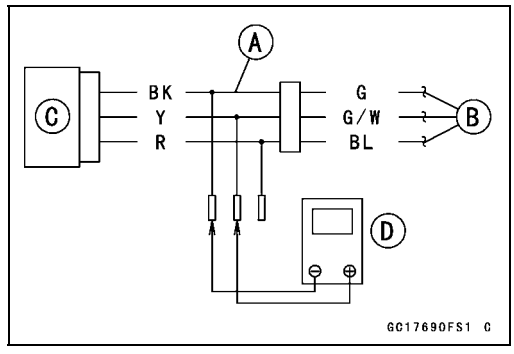

Intake Air Pressure Sensor #2 Output Voltage
Connections to Adapter:
Digital Meter (+) → Y (sensor G/W) lead
Digital Meter (–) → BK (sensor G) lead

● Measure the output voltage with the engine stopped and with the connector joined.

● Turn the ignition switch on.

Output Voltage
Usable Range: DC 3.80 ~ 4.20 V at standard atmospheric pressure (101.32 kPa, 76 cmHg)

NOTE

○*The output voltage changes according to the local atmospheric pressure.*

● Turn the ignition switch off.

★If the reading is out of the usable range, replace the sensor.

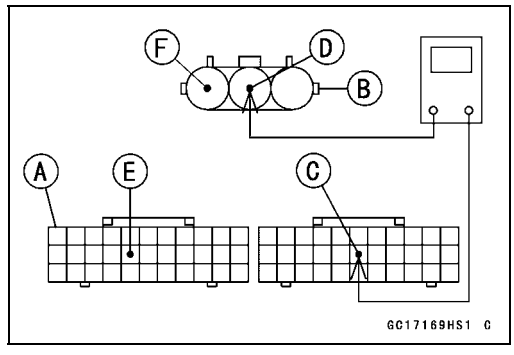

★If the reading is within the usable range, remove the ECU and check the wiring for continuity between main harness connectors.

○Disconnect the ECU and sensor connectors.

Wiring Continuity Inspection
ECU Connector [A] ←→
Intake Air Pressure Sensor #2 Connector [B]
ECU Terminal 17 [C] ←→ Sensor Terminal [D]
ECU Terminal 49 [E] ←→ Sensor Terminal [F]

★If the wiring is good, check the sensor for various vacuum (see Intake Air Pressure Sensor #1 Output Voltage Inspection).

Intake Air Pressure Sensor #2 (Service Code 16) (DTC P2226, P2227, P2228)

Intake Air Pressure Sensor #2 Circuit

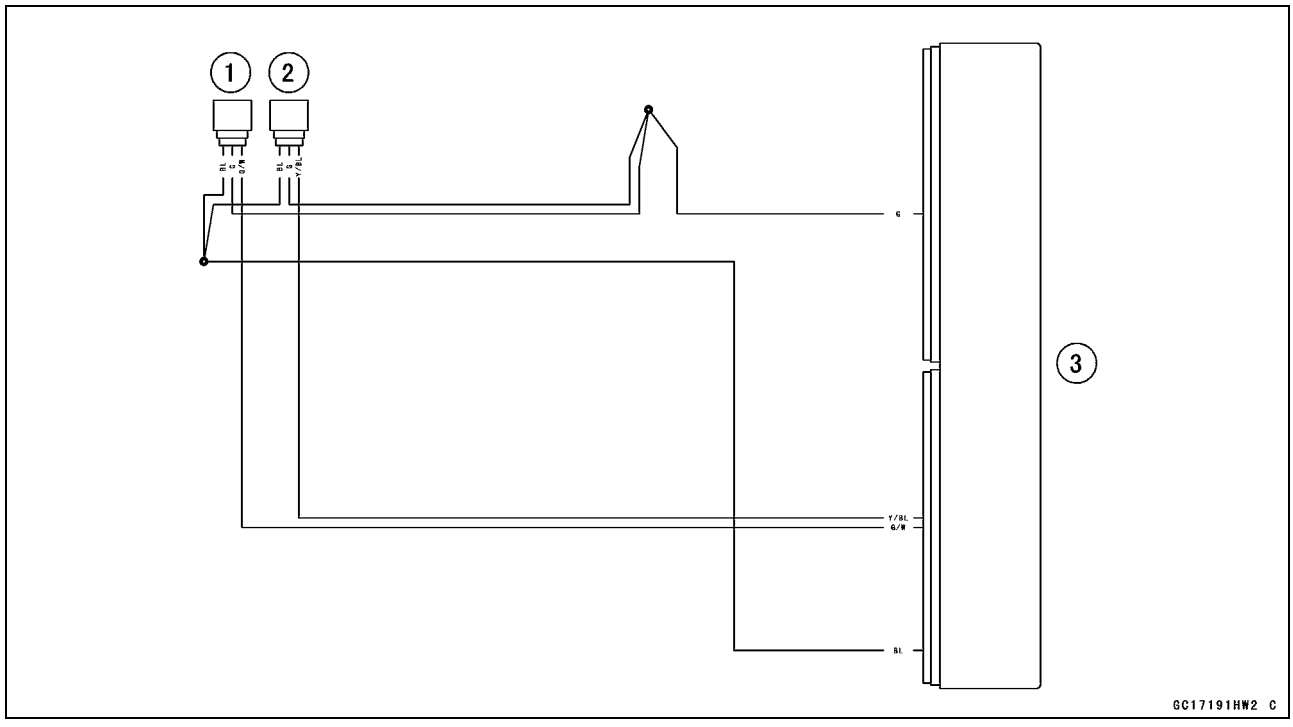

1. Intake Air Pressure Sensor #2
2. Intake Air Pressure Sensor #1
3. ECU

Crankshaft Sensor (Service Code 21) (DTC P0335)

The crankshaft sensor has no power source, and when the engine stops, the crankshaft sensor generates no signals.

Crankshaft Sensor Removal/Installation

● Refer to the Crankshaft Sensor Removal/Installation in the Electrical System chapter.

Crankshaft Sensor Resistance Inspection

● Refer to the Crankshaft Sensor Inspection in the Electrical System chapter.

★If the reading is within the standard, check the peak voltage (see Crankshaft Sensor Peak Voltage Inspection).

Crankshaft Sensor Peak Voltage Inspection

● Refer to the Crankshaft Sensor Peak Voltage Inspection in the Electrical System chapter.

★If the reading is within the standard, remove the ECU and check the wiring for continuity between main harness connectors.

○Disconnect the ECU and sensor connectors.

Wiring Continuity Inspection
ECU Connector [A] ←→
Crankshaft Sensor Connector [B]
ECU Terminal 37 [C] ←→ Sensor Terminal [D]
ECU Terminal 48 [E] ←→ Sensor Terminal [F]

★If the wiring is good, check the ECU for its ground and power supply (see ECU Power Supply Inspection).

★If the ground and power supply are good, replace the ECU (see ECU Removal/Installation).

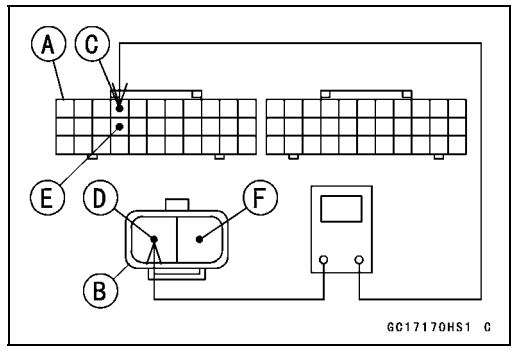

Crankshaft Sensor Circuit

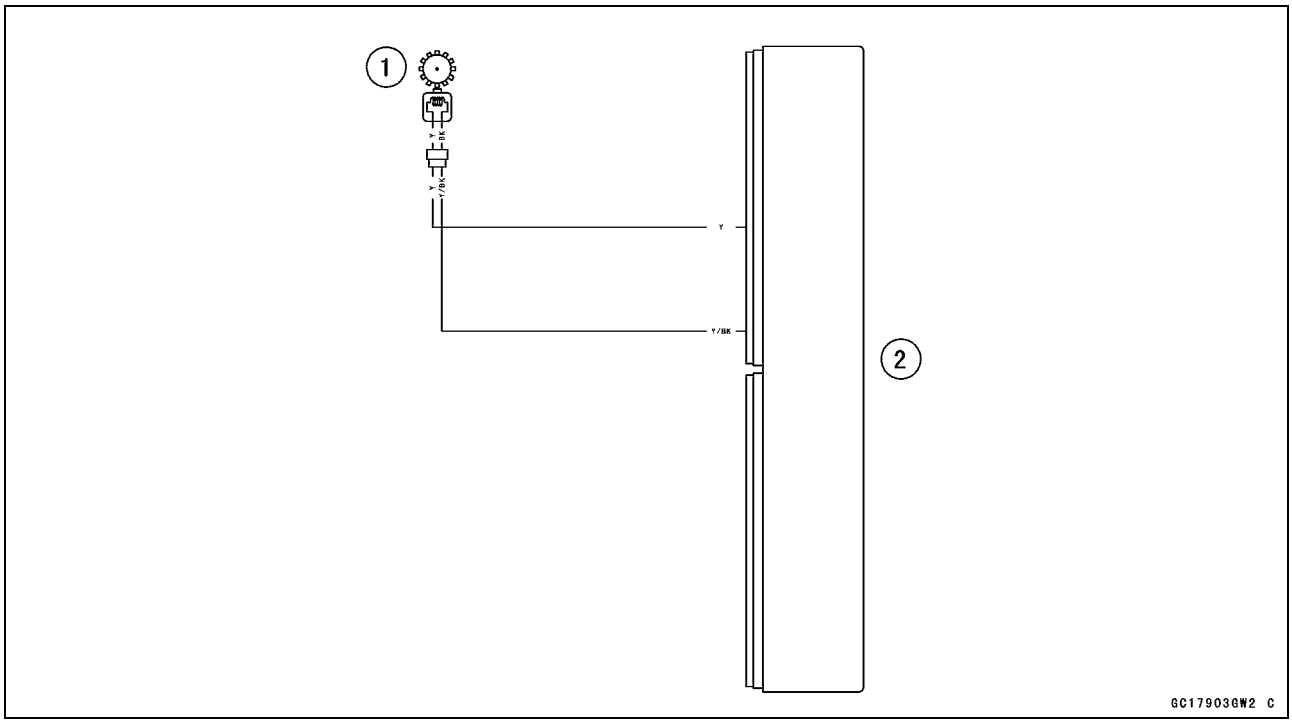

1. Crankshaft Sensor
2. ECU

Rear Wheel Rotation Sensor (Service Code 24) (DTC P2158)

Rear Wheel Rotation Sensor Signal Inspection

○The rear wheel rotation sensor sends the signal to the ECU through the ABS hydraulic unit.
○The ECU uses the rear wheel rotation sensor signal for motorcycle speed.
○The service code 24/DTC P2158 is detected with the ECU.
● Inspect the wheel rotation sensor air gap (see Wheel Rotation Sensor Air Gap Inspection in the Brakes chapter).
● Inspect the wheel rotation sensor rotor (see Wheel Rotation Sensor Rotor Inspection in the Brakes chapter).

● When service code 24/DTC P2158 is displayed, do the following inspection procedures.
● Disconnect:
ECU Connectors (see ECU Removal)
Rear Wheel Rotation Sensor Lead Connector (see Rear Wheel Rotation Sensor Removal in the Brakes chapter)
ABS Hydraulic Unit Connector (see ABS Hydraulic Unit Removal in the Brakes chapter)

● Check the wiring for continuity between main harness connectors.

Wiring Continuity Inspection
ECU Connector [A] ←→
ABS Hydraulic Unit Connector [B]
ECU Terminal 21 [C] ←→ ABS Hydraulic Unit Terminal 3 [D]

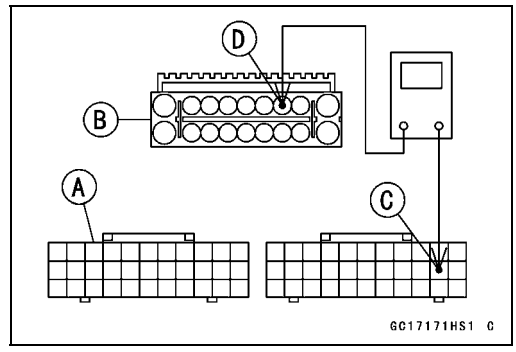

Wiring Continuity Inspection
ABS Hydraulic Unit Connector [A] ←→
Rear Wheel Rotation Sensor Connector [B]
ABS Hydraulic Unit Connector Terminal 15 [C] ←→ Sensor Terminal [D]
ABS Hydraulic Unit Connector Terminal 6 [E] ←→ Sensor Terminal [F]

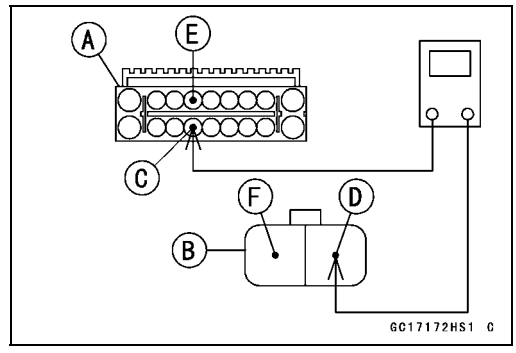

★If the wiring is good, check the ECU for its ground and power supply (see ECU Power Supply Inspection).
★If the ground and power supply are good, replace the ECU (see ECU Removal/Installation).

Rear Wheel Rotation Sensor (Service Code 24) (DTC P2158)

Wheel Rotation Sensor Circuit

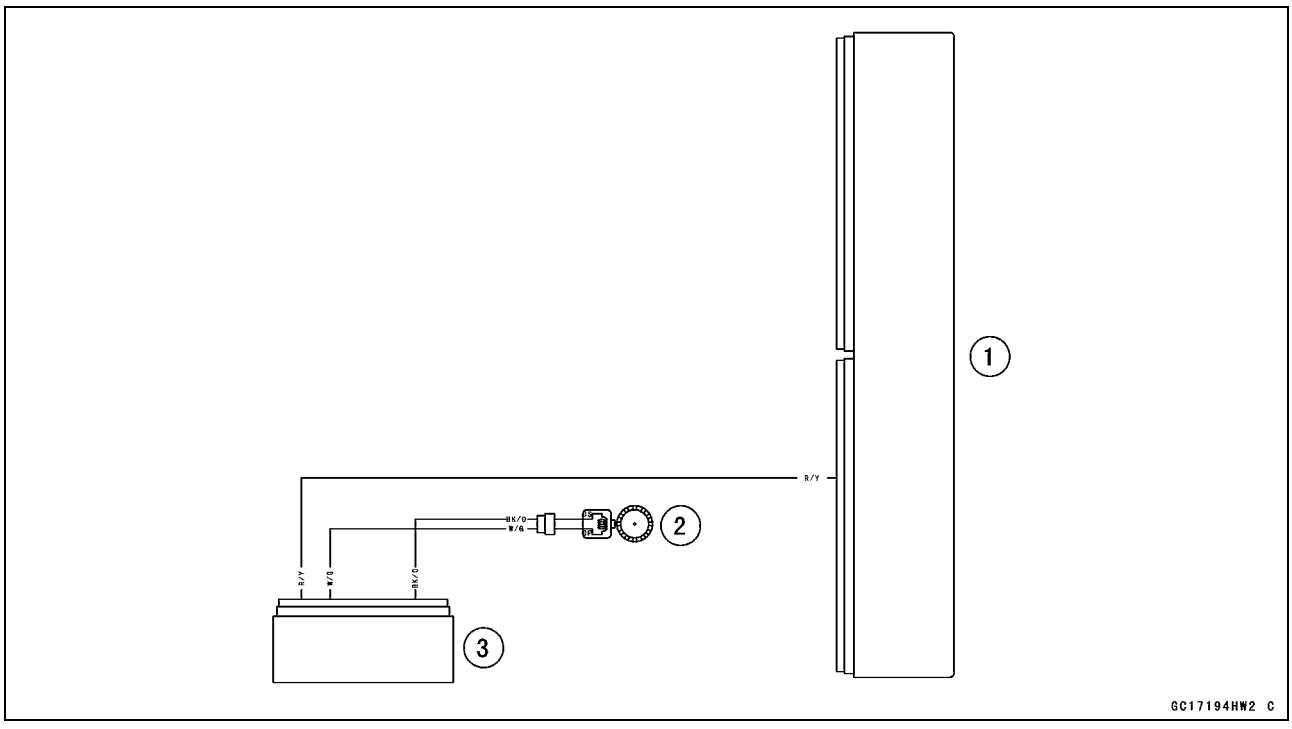

1. ECU
2. Rear Wheel Rotation Sensor
3. ABS Hydraulic Unit

Gear Position Sensor (Service Code 25) (DTC P0914, P0915, P0916)

Gear Position Sensor Removal/Installation

● Refer to the Gear Position Sensor Removal/Installation in the Electrical System chapter.

Gear Position Sensor Input Voltage Inspection

NOTE

○*Be sure the battery is fully charged.*

● Turn the ignition switch off.
● Remove:
Left Lower Fairing (see Lower Fairing Removal in the Frame chapter)
● Turn the ignition switch off.
● Disconnect:
Gear Position Sensor Connector [A]

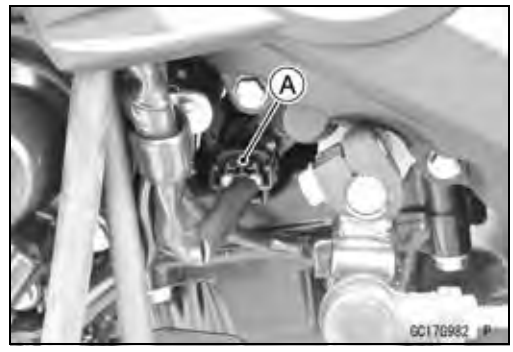

● Connect the measuring adapter [A] between the harness connector and gear position sensor connector.
Subharness [B]
Gear Position Sensor [C]

Special Tool - Measuring Adapter: 57001-1700

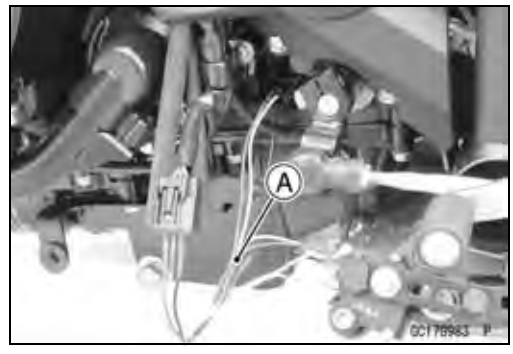

● Connect a digital meter [D] to the measuring adapter leads.

Gear Position Sensor Input Voltage
Connections to Adapters:
Digital Meter (+) → R (sensor LG) lead
Digital Meter (–) → BK (sensor G) lead

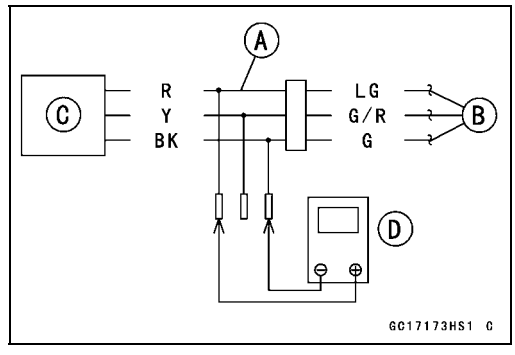

● Measure the input voltage with the engine stopped and with the connector joined.
● Turn the ignition switch on.

Input Voltage
Standard: DC 4.75 ~ 5.25 V

● Turn the ignition switch off.
★If the reading is within standard, check the output voltage (see Gear Position Sensor Output Voltage Inspection).

★If the reading is out of the standard, remove the ECU and check the wiring for continuity between main and subharness connectors.
○Disconnect the ECU and sensor connectors.

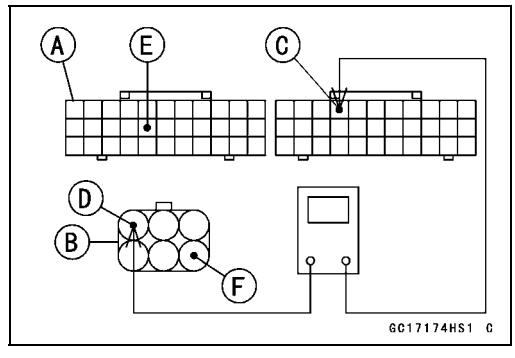

Wiring Continuity Inspection
ECU Connector [A] ←→
Subharness Connector [B]
ECU Terminal 4 [C] ←→ Connector Terminal [D]
ECU Terminal 49 [E] ←→ Connector Terminal [F]

Gear Position Sensor (Service Code 25) (DTC P0914, P0915, P0916)

Subharness Connector [A] ←→
Gear Position Sensor Connector [B]
Connector Terminal [C] ←→ Sensor Terminal [D]
Connector Terminal [E] ←→ Sensor Terminal [F]

★If the wiring is good, check the ECU for its ground and power supply (see ECU Power Supply Inspection).
★If the ground and power supply are good, replace the ECU (see ECU Removal/Installation).

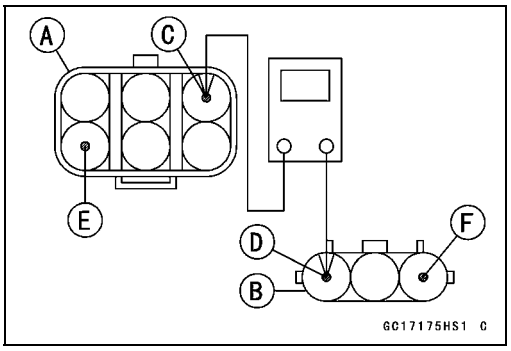

Gear Position Sensor Output Voltage Inspection

● Measure the output voltage at the gear position sensor in the same way as input voltage inspection, note the following.
○Disconnect the gear position sensor connector and connect the measuring adapter [A] between these connectors.
Subharness [B]
Gear Position Sensor [C]
Digital Meter [D]

Special Tool - Measuring Adapter: 57001-1700

Gear Position Sensor Output Voltage
Connections to Adapters:
Digital Meter (+) → Y (sensor G/R) lead
Digital Meter (–) → BK (sensor G) lead

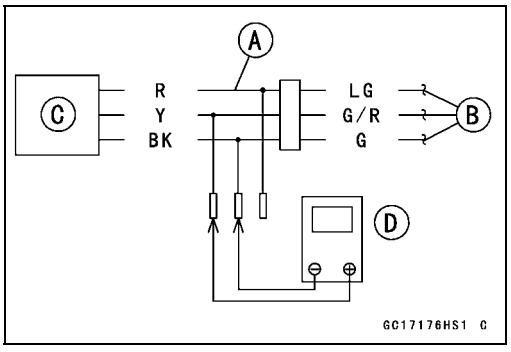

● Measure the output voltage with the engine stopped and with the connector joined.
● Turn the ignition switch on.
○When changing the gear position from lower gear to higher gear, raise the rear wheel off the ground with the stand and rotate the rear wheel by hand.

Gear Position Sensor Output Voltage

Gear Position	Output Voltage
1st	0.195 ~ 0.629 V
N	0.811 ~ 0.976 V
2nd	1.143 ~ 1.615 V
3rd	1.860 ~ 2.426 V
4th	2.612 ~ 3.100 V
5th	3.398 ~ 3.998 V
6th	4.272 ~ 4.799 V

● Turn the ignition switch off.
★If the reading is out of the standard, replace the gear position sensor.

Gear Position Sensor (Service Code 25) (DTC P0914, P0915, P0916)

★If the reading is within standard, remove the ECU and check the wiring for continuity between main and subharness connectors.

○Disconnect the ECU and sensor connectors.

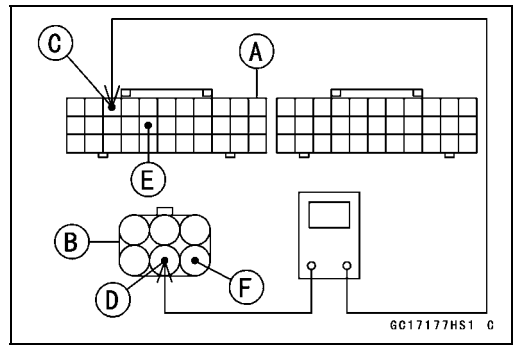

Wiring Continuity Inspection

ECU Connector [A] ←→

Subharness Connector [B]

ECU Terminal 36 [C] ←→ Connector Terminal [D]

ECU Terminal 49 [E] ←→ Connector Terminal [F]

Subharness Connector [A] ←→

Gear Position Sensor Connector [B]

Connector Terminal [C] ←→ Sensor Terminal [D]

Connector Terminal [E] ←→ Sensor Terminal [F]

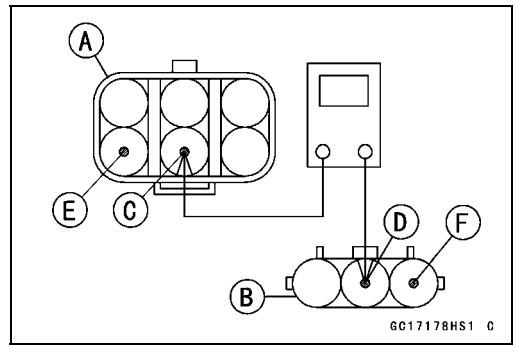

★If the wiring is good, check the ECU for its ground and power supply (see ECU Power Supply Inspection).

★If the ground and power supply are good, replace the ECU (see ECU Removal/Installation).

Gear Position Sensor Circuit

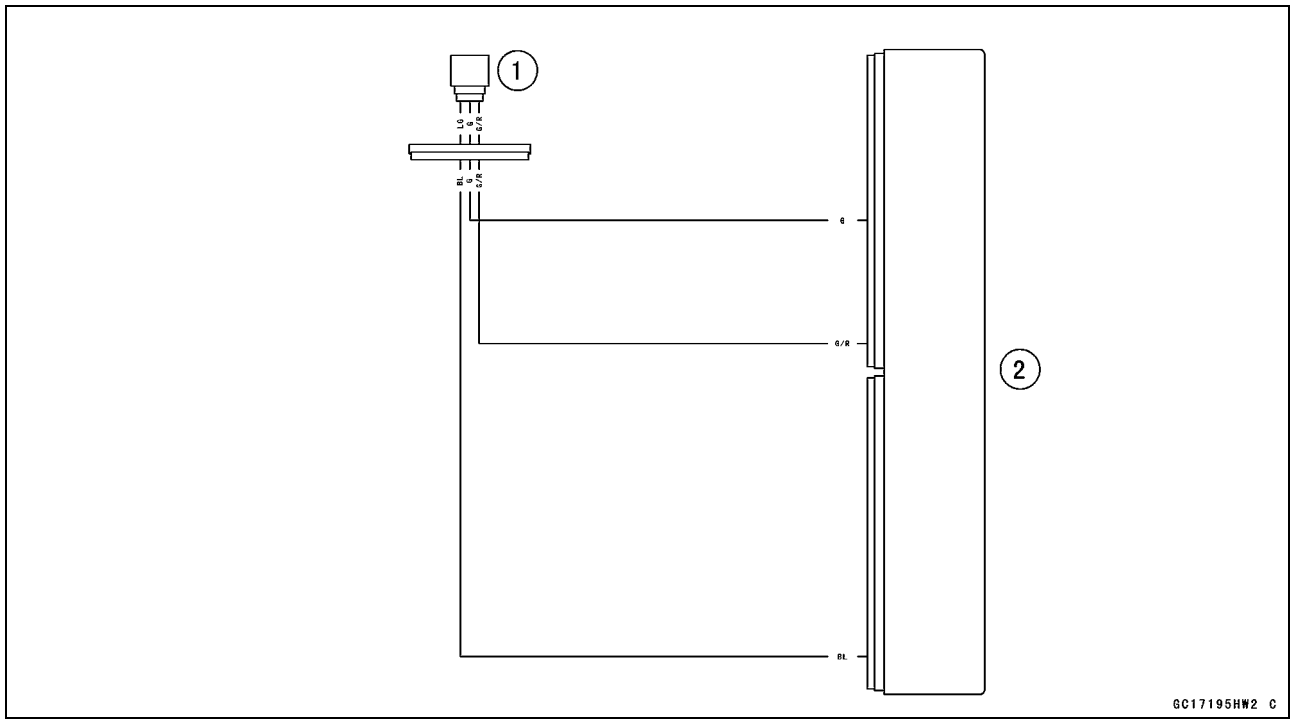

1. Gear Position Sensor
2. ECU

Vehicle-down Sensor (Service Code 31) (DTC C0064)

This sensor has a weight [A] with two magnets inside, and sends a signal to the ECU. But when the motorcycle banks 60 ~ 70° or more to either side (in fact falls down), the weight turns and the signal changes. The ECU senses this change, and stops the fuel pump relay, the fuel injectors and the ignition system.

Hall IC [B]

When the motorcycle is down, the ignition switch is left on. If the starter button is pushed, the electric starter turns but the engine does not start. To start the engine again, raise the motorcycle, turn the ignition switch off, and then turn it on.

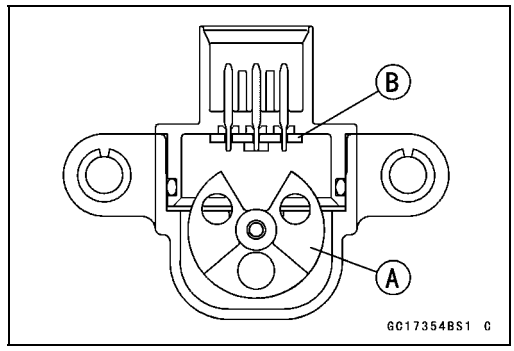

Vehicle-down Sensor [A]
Ground Terminal [B]: G
Output Terminal [C]: Y/G
Power Source Terminal [D]: BL

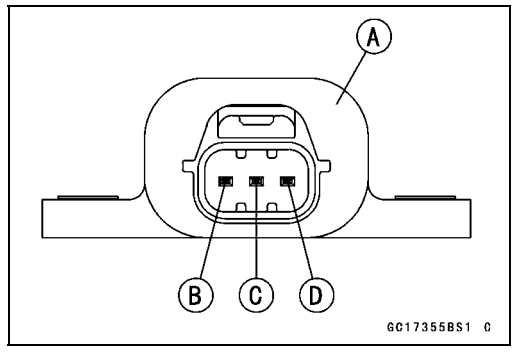

Vehicle-down Sensor Removal

NOTICE
Never drop the vehicle-down sensor especially on a hard surface. Such a shock to the sensor can damage it.

- Remove:
  Air Cleaner Housing (see Air Cleaner Housing Removal)
- Disconnect:
  Vehicle-down Sensor Connector [A]
- Remove:
  Vehicle-down Sensor Bolts [B] and Bracket [C]
  Vehicle-down Sensor [D]

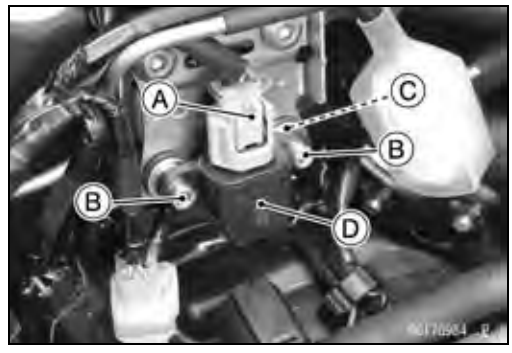

Vehicle-down Sensor Installation

- Be sure to install the rubber dampers [A] and collars [B] on the bracket.

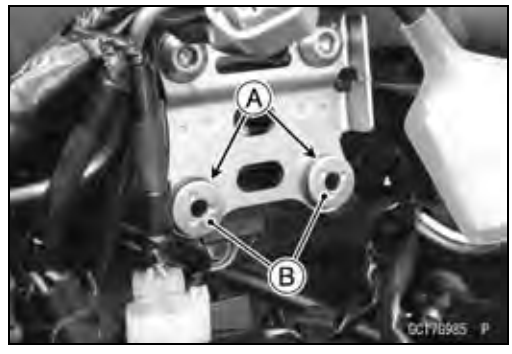

Vehicle-down Sensor (Service Code 31) (DTC C0064)

● The UP mark [A] of the sensor should face upward.

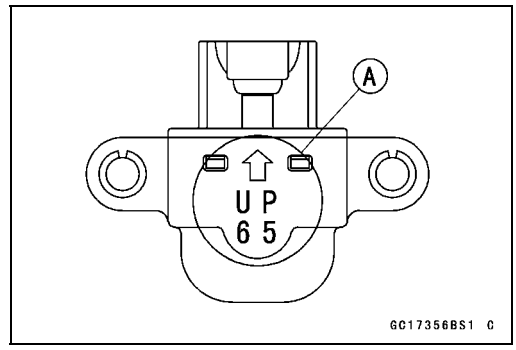

⚠ WARNING

Incorrect installation of the vehicle-down sensor could cause sudden loss of engine power. The rider could lose balance during certain riding situations for an accident resulting in injury or death. Ensure that the vehicle-down sensor is held in place by the sensor bracket.

● Install the bracket.
● Tighten:

Torque - Vehicle-down Sensor Mounting Bolts: 5.9 N·m (0.60 kgf·m, 52 in·lb)

● Install the removed parts (see appropriate chapters).

Vehicle-down Sensor Input Voltage Inspection

NOTE

○Be sure the battery is fully charged.

● Turn the ignition switch off.
● Disconnect the vehicle-down sensor connector and connect the measuring adapter [A] between these connectors as shown.
Main Harness [B]
Vehicle-down Sensor [C]

Special Tool - Measuring Adapter: 57001-1700

● Connect a digital meter [D] to the measuring adapter leads.

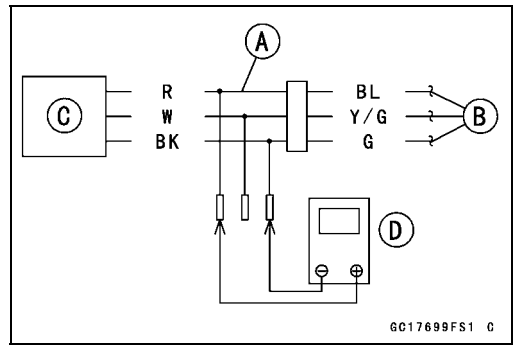

Vehicle-down Sensor Input Voltage
Connections to Adapter:
Digital Meter (+) → R (sensor BL) lead
Digital Meter (–) → BK (sensor G) lead

● Measure the input voltage with the engine stopped and with the connector joined.
● Turn the ignition switch on.

Input Voltage
Standard: DC 4.75 ~ 5.25 V

● Turn the ignition switch off.
★If the reading is within the standard, check the output voltage (see Vehicle-down Sensor Output Voltage Inspection).

Vehicle-down Sensor (Service Code 31) (DTC C0064)

★If the reading is out of the standard, remove the ECU and check the wiring for continuity between main harness connectors.

○Disconnect the ECU and sensor connectors.

Wiring Continuity Inspection
ECU Connector [A] ←→
Vehicle-down Sensor Connector [B]
ECU Terminal 4 [C] ←→ Sensor Terminal [D]
ECU Terminal 49 [E] ←→ Sensor Terminal [F]

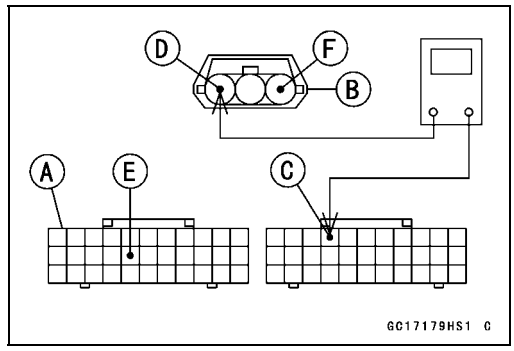

★If the wiring is good, check the ECU for its ground and power supply (see ECU Power Supply Inspection).

★If the ground and power supply are good, replace the ECU (see ECU Removal/Installation).

Vehicle-down Sensor Output Voltage Inspection

● Remove the vehicle-down sensor (see Vehicle-down Sensor Removal).

● Connect the measuring adapter [A] to the vehicle-down sensor connectors as shown.
Main Harness [B]
Vehicle-down Sensor [C]

Special Tool - Measuring Adapter: 57001-1700

● Connect a digital meter [D] to the measuring adapter leads.

Vehicle-down Sensor Output Voltage
Connections to Adapter:
Digital Meter (+) → W (sensor Y/G) lead
Digital Meter (–) → BK (sensor G) lead

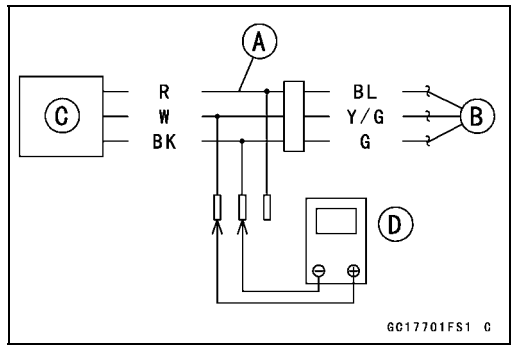

Vehicle-down Sensor (Service Code 31) (DTC C0064)

- Hold the sensor vertically.
- Measure the output voltage with the engine stopped and with the connector joined.
- Turn the ignition switch on.
- Tilt the sensor 60 ~ 70° or more [A] right or left, then hold the sensor almost vertical with the arrow mark pointed up [B], and measure the output voltage.

Output Voltage

Standard: With sensor tilted 60 ~ 70° or more right or left: DC 0.65 ~ 1.35 V

With sensor arrow mark pointed up: DC 3.55 ~ 4.45 V

- Turn the ignition switch off.

★If the reading is out of the standard, replace the sensor.

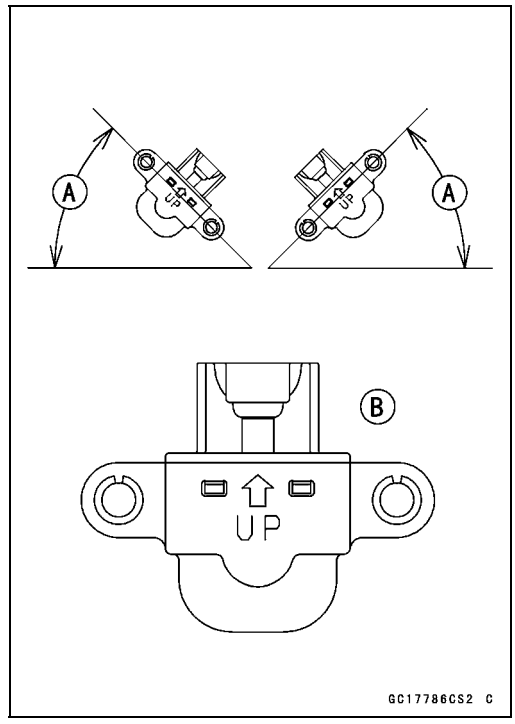

★If the reading is within the standard, remove the ECU and check the wiring for continuity between main harness connectors.

○Disconnect the ECU and sensor connectors.

Wiring Continuity Inspection

ECU Connector [A] ←→

Vehicle-down Sensor Connector [B]

ECU Terminal 19 [C] ←→ Sensor Terminal [D]

ECU Terminal 49 [E] ←→ Sensor Terminal [F]

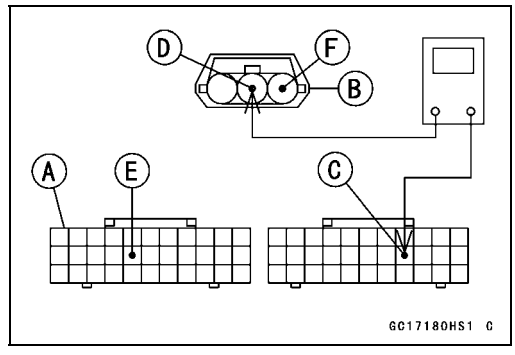

★If the wiring is good, check the ECU for its ground and power supply (see ECU Power Supply Inspection).

★If the ground and power supply are good, replace the ECU (see ECU Removal/Installation).

Vehicle-down Sensor (Service Code 31) (DTC C0064)

Vehicle-down Sensor Circuit

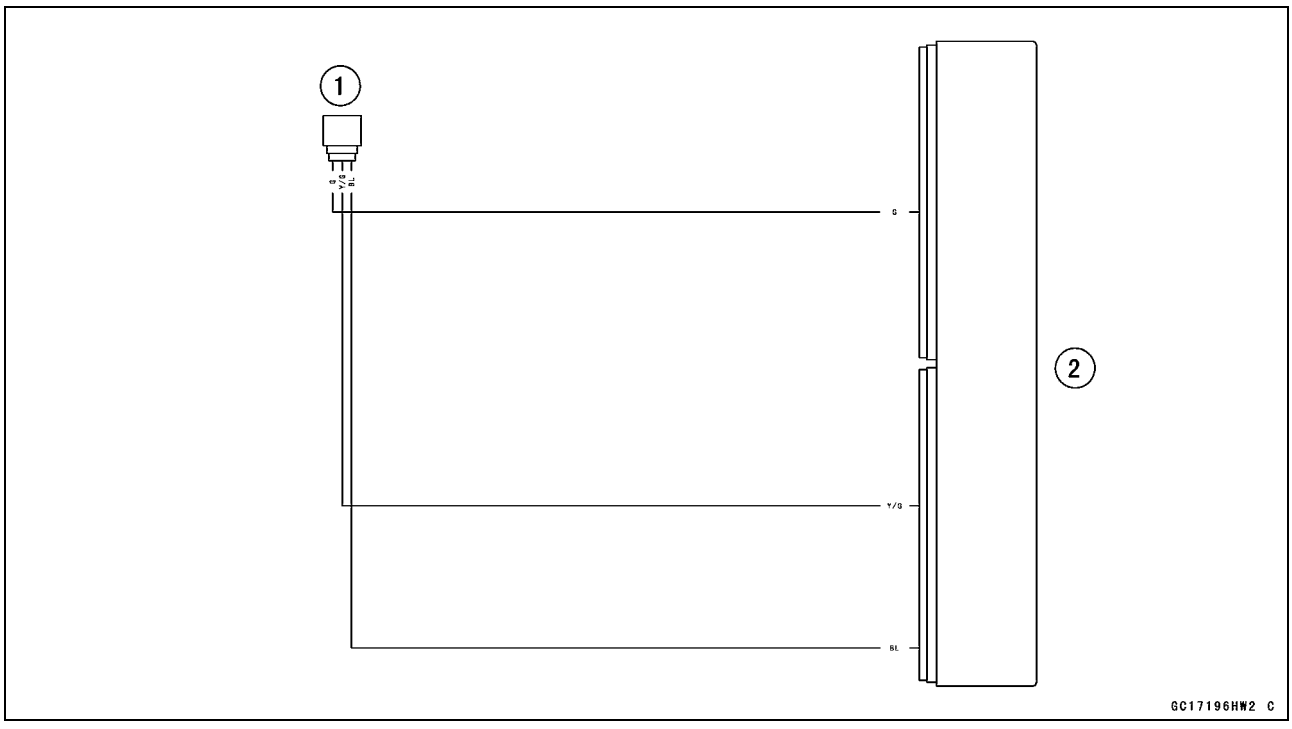

1. Vehicle-down Sensor
2. ECU

Subthrottle Sensor (Service Code 32) (DTC P0220, P0223)

The subthrottle sensor is a rotating variable resistor that change output voltage according to throttle operating. The ECU senses this voltage change and determines fuel injection quantity, and ignition timing according to engine rpm, and throttle opening.

Input Terminal [A]: BL
Output Terminal [B]: BL/W
Ground Terminal [C]: G

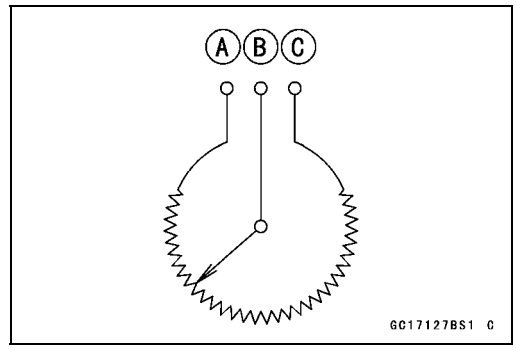

Subthrottle Sensor Removal/Adjustment

NOTICE

Do not remove or adjust the subthrottle sensor [A] since it has been adjusted and set with precision at the factory.
Never drop the throttle body assy especially on a hard surface. Such a shock to the subthrottle sensor can damage it.

Subthrottle Sensor Input Voltage Inspection

NOTE

○*Be sure the battery is fully charged.*

- Turn the ignition switch off.
- Disconnect the subthrottle sensor connector and connect the setting adapter [A] between these connectors.

Special Tool - Throttle Sensor Setting Adapter: 57001 -1538

- Connect a digital meter to the setting adapter leads.

Subthrottle Sensor Input Voltage
Connections to Adapter:
Digital Meter (+) → W (sensor BL) lead
Digital Meter (–) → BK (sensor G) lead

- Measure the input voltage with the engine stopped and with the connector joined.
- Turn the ignition switch on.

Input Voltage
Standard: DC 4.75 ~ 5.25 V

- Turn the ignition switch off.

★If the reading is within the standard, check the output voltage (see Subthrottle Sensor Output Voltage Inspection).

Subthrottle Sensor (Service Code 32) (DTC P0220, P0223)

★If the reading is out of the standard, remove the ECU and check the wiring for continuity between main harness connectors.

○Disconnect the ECU and sensor connectors.

Wiring Continuity Inspection
ECU Connector [A] ←→
Subthrottle Sensor Connector [B]
ECU Terminal 4 [C] ←→ Sensor Terminal [D]
ECU Terminal 49 [E] ←→ Sensor Terminal [F]

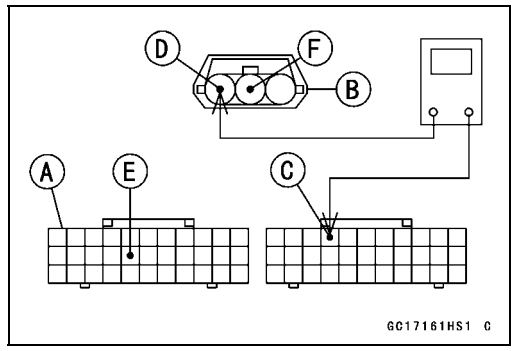

★If the wiring is good, check the ECU for its ground and power supply (see ECU Power Supply Inspection).

★If the ground and power supply are good, replace the ECU (see ECU Removal/Installation).

Subthrottle Sensor Output Voltage Inspection

● Measure the output voltage at the subthrottle sensor in the same way as input voltage inspection, note the following.

○Disconnect the subthrottle sensor connector and connect the setting adapter [A] between these connectors.

Special Tool - Throttle Sensor Setting Adapter: 57001 -1538

Subthrottle Sensor Output Voltage
Connections to Adapter:
Digital Meter (+) → R (sensor BL/W) lead
Digital Meter (–) → BK (sensor G) lead

● Remove the air cleaner housing (see Air Cleaner Housing Removal).

● Disconnect the subthrottle valve actuator connector [A].

Subthrottle Sensor (Service Code 32) (DTC P0220, P0223)

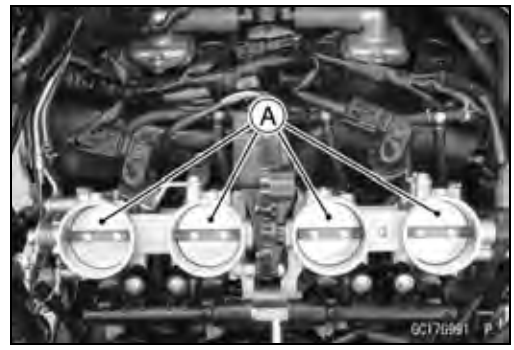

- Measure the output voltage with the engine stopped with the connector joined.
- Turn the ignition switch on.
- Measure the output voltage when the subthrottle valves [A] are fully opened by hand.

Output Voltage

Standard: DC 0.48 ~ 0.52 V at subthrottle valve full close position

DC 3.66 ~ 4.38 V at subthrottle valve full open position (for reference)

NOTE

○*Open the subthrottle valves, confirm the output voltage will be raise.*

○*The standard voltage refers to the value when the voltage reading at the Input Voltage Inspection shows 5 V exactly.*

○*When the input voltage reading shows other than 5 V, derive a voltage range as follows.*
Example:
In the case of a input voltage of 4.75 V.
1.08 × 4.75 ÷ 5.00 = 1.03 V
1.12 × 4.75 ÷ 5.00 = 1.06 V
Thus, the valid range is 1.03 ~ 1.06 V

- Turn the ignition switch off.

★If the reading is out of the standard, check the subthrottle sensor resistance (see Subthrottle Sensor Resistance Inspection).

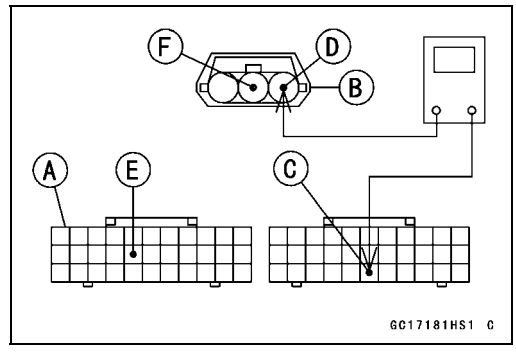

★If the reading is within the standard, remove the ECU and check the wiring for continuity between main harness connectors.

○Disconnect the ECU and sensor connectors.

Wiring Continuity Inspection

ECU Connector [A] ←→

Subthrottle Sensor Connector [B]

ECU Terminal 28 [C] ←→ Sensor Terminal [D]

ECU Terminal 49 [E] ←→ Sensor Terminal [F]

★If the wiring is good, check the ECU for its ground and power supply (see ECU Power Supply Inspection).

★If the ground and power supply are good, replace the ECU (see ECU Removal/Installation).

Subthrottle Sensor (Service Code 32) (DTC P0220, P0223)

Subthrottle Sensor Resistance Inspection

- Turn the ignition switch off.
- Disconnect the subthrottle sensor connector.
- Connect the setting adapter [A] to the sensor connector only.

Special Tool - Throttle Sensor Setting Adapter: 57001 -1538

- Measure the subthrottle sensor resistance.

Subthrottle Sensor Resistance
Connections to Adapter:
W (sensor BL) lead ←→ BK (sensor G) lead

Standard: 4 ~ 6 kΩ

★If the reading is out of the standard, replace the throttle body assy (see Throttle Body Assy Removal/Installation).
★If the reading is within the standard, but the problem still exists, replace the ECU (see ECU Removal/Installation).

Subthrottle Sensor Circuit

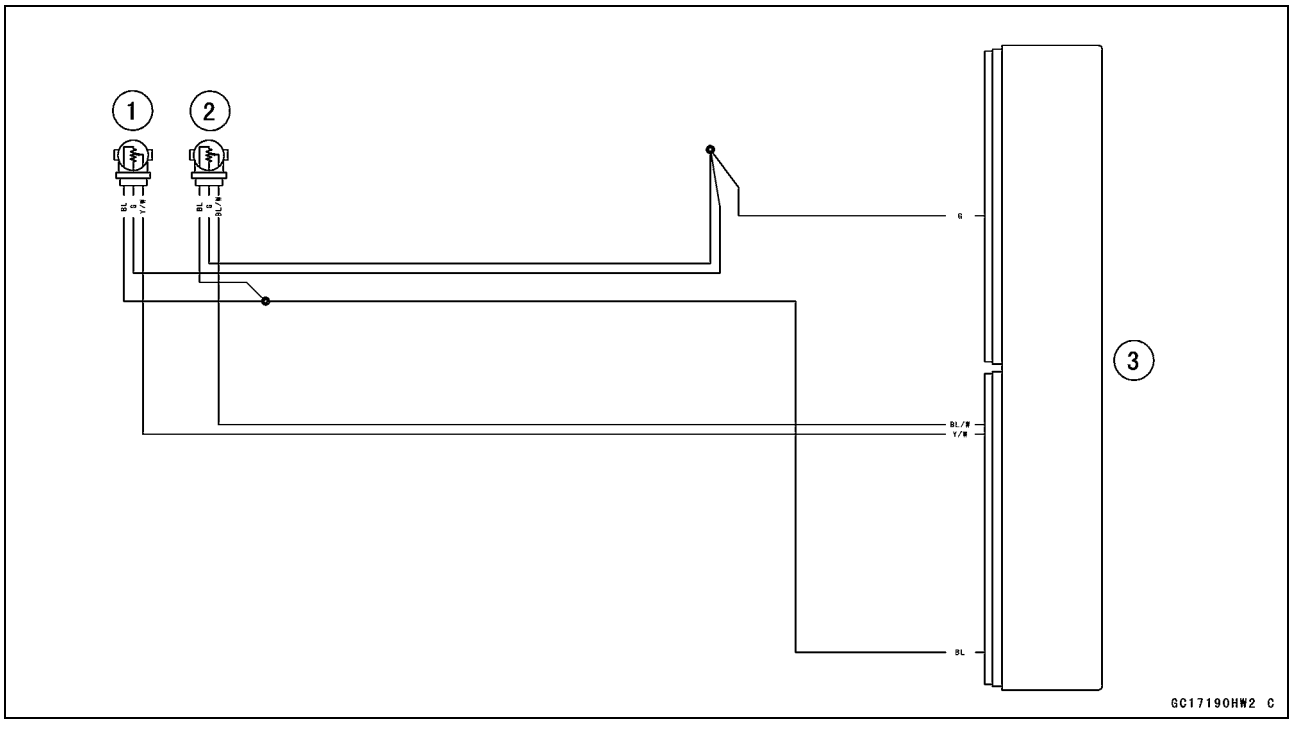

1. Main Throttle Sensor
2. Subthrottle Sensor
3. ECU

Oxygen Sensor - not activated (Service Code 33) (DTC P0130, P0132)

Oxygen Sensor Removal/Installation

● Refer to the Oxygen Sensor Removal/Installation in the Electrical System chapter.

Oxygen Sensor Inspection

● Turn the ignition switch off.
● Remove:
Fuel Tank (see Fuel Tank Removal)
● Disconnect the oxygen sensor lead connector [A].

● Connect the measuring adapter [A] between these connectors.
Main Harness [B]
Oxygen Sensor [C]

Special Tool - Measuring Adapter: 57001-1700

● Connect a digital meter [D] to the measuring adapter leads.

Oxygen Sensor Output Voltage
Connections to Adapter:
Digital Meter (+) → R (sensor BL) lead
Digital Meter (−) → BK (sensor W) lead

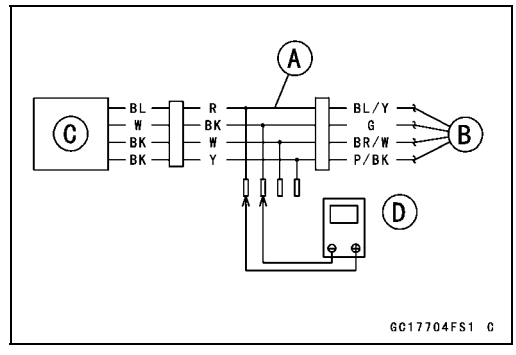

● Remove the air switching valve [A] (see Air Switching Valve Removal in the Engine Top End chapter).
○Do not disconnect the air switching valve connector [B].

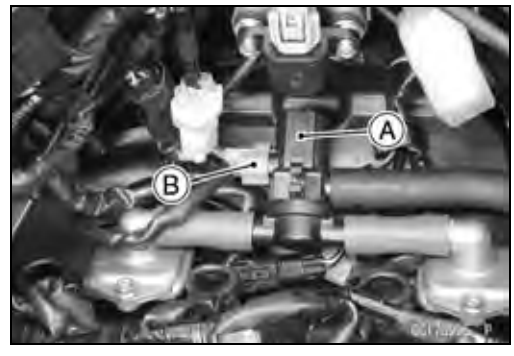

Oxygen Sensor - not activated (Service Code 33) (DTC P0130, P0132)

- Install the suitable plugs [A] on the fitting of the air suction valve covers, and shut off the secondary air.

- Remove the fuel hose (see Fuel Hose Replacement in the Periodic Maintenance chapter).
- Connect the following parts temporarily.
  Fuel Pump Lead Connector [A]
  Extension Tube [B]
  Air Cleaner Housing (see Air Cleaner Housing Installation)

Special Tool - Extension Tube: 57001-1578

- Warm up the engine thoroughly until the radiator fan starts.
- Measure the output voltage with the connector joined.

Output Voltage (with Plugs, Rich)
Standard: DC 0.7 V or more

- Turn the ignition switch off.
- Remove the air cleaner housing (see Air Cleaner Housing Removal).
- Remove the plugs from the fittings [A].

⚠ WARNING

The engine gets extremely hot during normal operation and can cause serious burns. Never touch a hot engine.

- Install the air cleaner housing temporarily (see Air Cleaner Housing Installation).
- Start the engine, and let it idle.
- Measure the output voltage with the connector joined.

Output Voltage (without Plugs, Lean)
Standard: DC 0.2 V or less

- Turn the ignition switch off.

Oxygen Sensor - not activated (Service Code 33) (DTC P0130, P0132)

★If the reading is out of the standard (with plugs: DC 0.7 V or more, without plugs: DC 0.2 V or less), remove the ECU and check the wiring for continuity between main harness connectors.

○Disconnect the ECU and sensor connectors.

Wiring Continuity Inspection
ECU Connectors [A] ←→
Oxygen Sensor Connector [B]
ECU Terminal 8 [C] ←→ Sensor Terminal [D]
ECU Terminal 59 [E] ←→ Sensor Terminal [F]

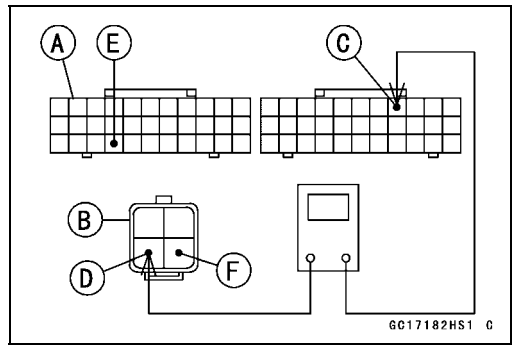

★If the wiring is good, replace the sensor.

★If the reading is within the standard (with plugs: DC 0.7 V or more, without plugs: DC 0.2 V or less), check the ECU for its ground and power supply (see ECU Power Supply Inspection).

★If the ground and power supply are good, replace the ECU (see ECU Removal/Installation).

Oxygen Sensor Circuit

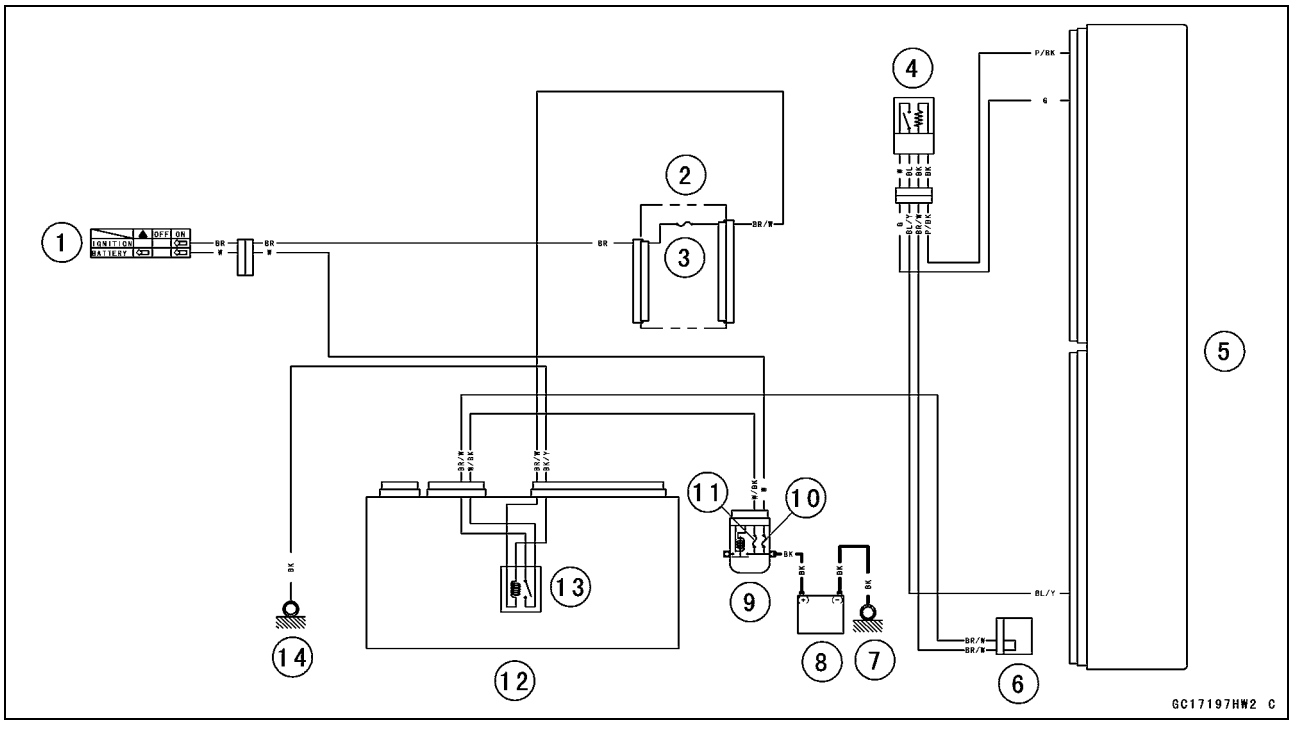

1. Ignition Switch
2. Fuse Box (1)
3. Ignition Fuse 15 A
4. Oxygen Sensor
5. ECU
6. Joint Connector B
7. Engine Ground
8. Battery 12 V 8 Ah
9. Starter Relay
10. Main Fuse 30 A
11. ECU Fuse 15 A
12. Relay Box
13. ECU Main Relay
14. Frame Ground (6)

Immobilizer Amplifier (Service Code 35, Equipped Models)

Antenna Resistance Inspection

- Turn the ignition switch off.
- Remove the air cleaner housing (see Air Cleaner Housing Removal).
- Disconnect the antenna lead connector [A].
- Measure the antenna resistance.

Antenna Resistance
Connections: BK lead ←→ BK/W lead
Standard: About 3.0 ~ 4.6 Ω

★If the reading is out of the standard, replace the ignition switch (see Immobilizer System Parts Replacement in the Electrical System chapter).
★If the reading is within the standard, check the wiring to the amplifier (see Immobilizer System Circuit).
★If the wiring is good, check the input voltage of the amplifier (see Amplifier Input Voltage Inspection).

Amplifier Input Voltage Inspection

NOTE

○*Be sure the battery is fully charged.*

- Turn the ignition switch off.
- Remove:
  Air Cleaner Housing (see Air Cleaner Housing Removal)
  Bracket Bolts [A]

- Connect a digital meter to the amplifier connector [A] with needle adapter set.

Special Tool - Needle Adapter Set: 57001-1457

Amplifier Input Voltage
Connections to Amplifier Connector:
Digital Meter (+) → BR/W lead
Digital Meter (–) → BK/BL lead

- Measure the input voltage with the engine stopped and with the connector joined.
- Turn the ignition switch on.

Input Voltage
Standard: Battery Voltage

- Turn the ignition switch off.

★If the reading is out of the standard, check the wiring (see Immobilizer System Circuit).
★If the reading is within the standard, check the wiring to ECU (see Immobilizer System Circuit).
★If the wiring is good, replace the amplifier (see Immobilizer System Parts Replacement in the Electrical System chapter).

Blank Key Detection (Service Code 36, Equipped Models)

- This code appears in the following conditions.
  - ○The transponder [A] in the ignition key is malfunction.
  - ○When the spare key of unregistration is used.
  - ○When the ignition key is registered in the registered ECU.
- Therefore, the service code 36 will disappear when the above issue is solved.

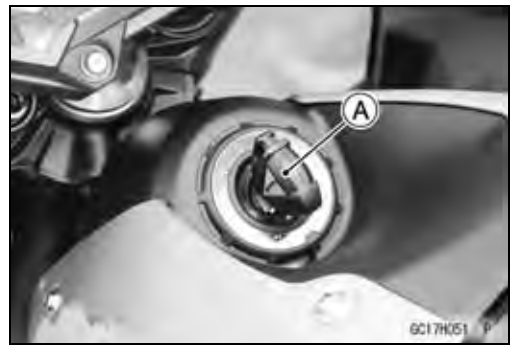

Ignition Key Inspection

- Register the ignition key correctly (see Key Registration in the Electrical System chapter).

★If the service code 36 appears again, the transponder in the key is malfunction, replace it.

Immobilizer System Circuit

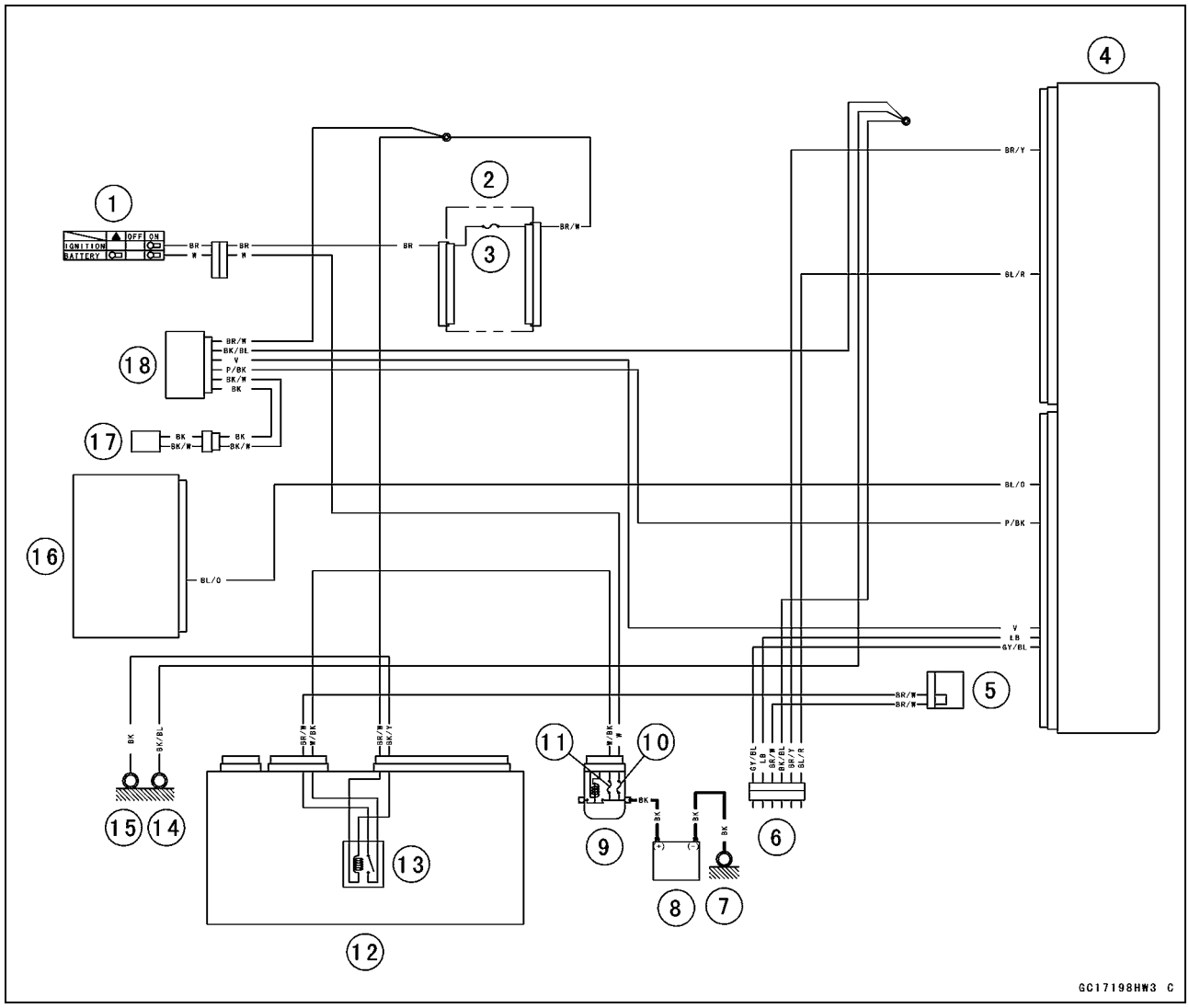

1. Ignition Switch
2. Fuse Box (1)
3. Ignition Fuse 15 A
4. ECU
5. Joint Connector B
6. Immobilizer/Kawasaki Diagnostic System Connector
7. Engine Ground
8. Battery 12 V 8 Ah
9. Starter Relay
10. Main Fuse 30 A
11. ECU Fuse 15 A
12. Relay Box
13. ECU Main Relay
14. Frame Ground (7)
15. Frame Ground (6)
16. Meter Unit
17. Immobilizer Antenna
18. Immobilizer Amplifier

ECU Communication Error (Service Code 39)

ECU Communication Line Inspection

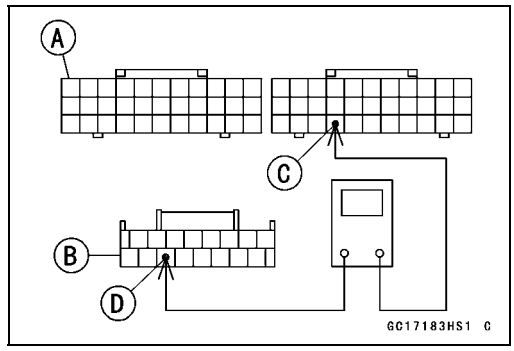

○When the data is not sent from the ECU to the meter unit for more than about 10 seconds, the service code 39 is displayed.
○The service code 39 is detected with meter unit.
● Remove the ECU and meter unit, check the wiring for continuity between main harness connectors.
○Disconnect the ECU and meter unit connectors.

Wiring Continuity Inspection
ECU Connector [A] ←→ Meter Unit Connector [B]
ECU Terminal 26 [C] ←→ Meter Terminal [D]

★If the wiring is good, check the meter unit (see Meter Unit Inspection in the Electrical System chapter).
★If the meter unit is normal, replace the ECU (see ECU Removal/Installation).

ECU Communication Line Circuit

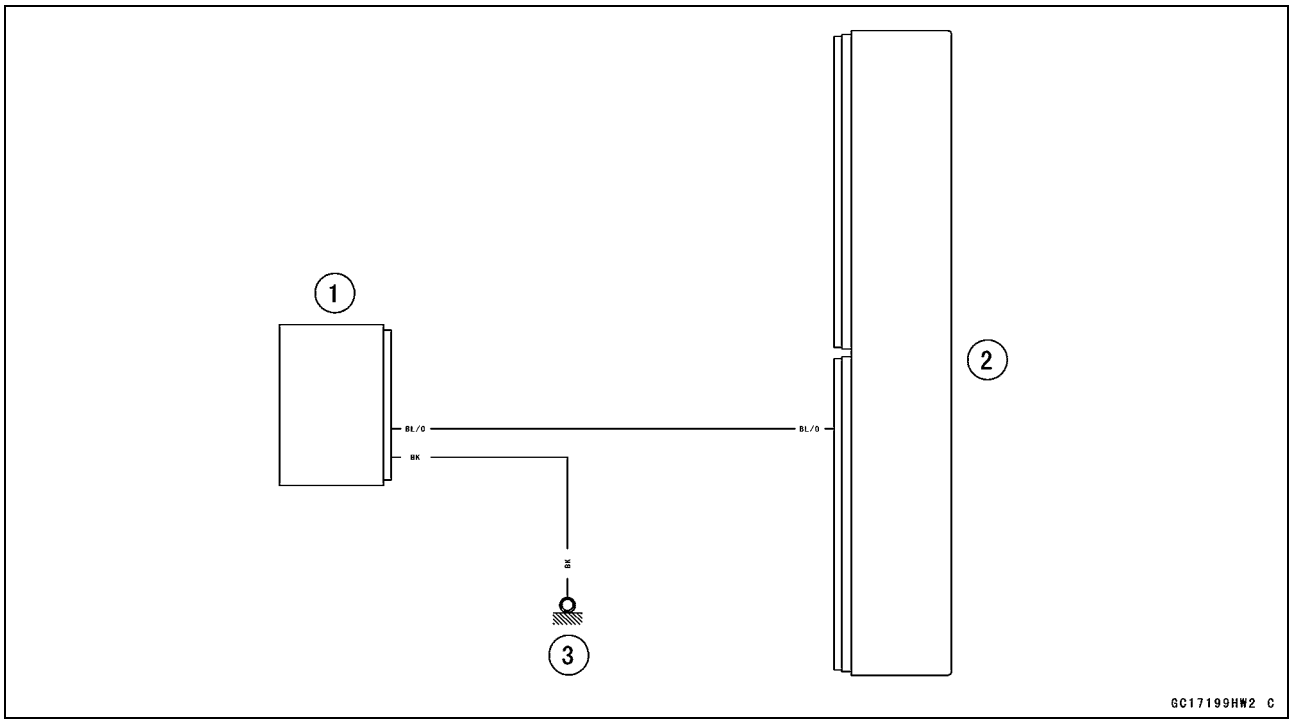

1. Meter Unit
2. ECU
3. Frame Ground (10)

Fuel Injectors (Service Code 41, 42, 43, 44) (DTC P0201, P0202, P0203, P0204)

Inspect the eligible fuel injector according to the following service code or DTC.

Service Code 41/DTC P0201 → Fuel Injector #1
Service Code 42/DTC P0202 → Fuel Injector #2
Service Code 43/DTC P0203 → Fuel Injector #3
Service Code 44/DTC P0204 → Fuel Injector #4

Fuel Injector Removal/Installation

● Refer to the Throttle Body Assy Disassembly/Assembly.

Fuel Injector Audible Inspection

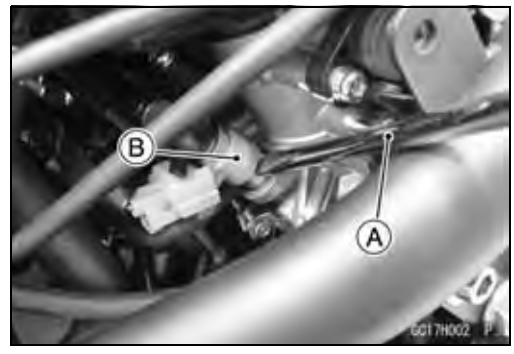

NOTE

○*Be sure the battery is fully charged.*

● Start the engine, and let it idle.
● Apply the flat tip screwdriver [A] to the fuel injector [B]. Put the grip end onto your ear, and listen whether the fuel injector is clicking or not.
○A sound scope can also be used.
○The click interval becomes shorter as the engine speed rises.
● Do the same for the other fuel injectors.
★If all the fuel injectors click at a regular intervals, the fuel injectors are normal.
● Turn the ignition switch off.
★If any fuel injector does not click, check the fuel injector resistance (see Fuel Injector Resistance Inspection).

Fuel Injector Resistance Inspection

● Remove the throttle body assy with the connectors installed (see Throttle Body Assy Removal).
● Disconnect the fuel injector connector.
● Connect a digital meter to the terminals [A] in each fuel injector.
● Measure the fuel injector resistance.

Fuel Injector Resistance
Standard: About 12.0 Ω @20°C (68°F)

★If the reading is out of the standard, replace the fuel injector.
★If the reading is within the standard, check the power source voltage (see Fuel Injector Power Source Voltage Inspection).

Fuel Injectors (Service Code 41, 42, 43, 44) (DTC P0201, P0202, P0203, P0204)

Fuel Injector Power Source Voltage Inspection

NOTE

○*Be sure the battery is fully charged.*

- Turn the ignition switch off.
- Remove the throttle body assy with the connectors installed (see Throttle Body Assy Removal).
- Disconnect the injector connector and connect the measuring adapter [A] between these connectors as shown.
  Main Harness [B]
  Fuel Injector #1 [C]

Special Tool - Measuring Adapter: 57001-1700

- Connect a digital meter [D] to the measuring adapter lead.

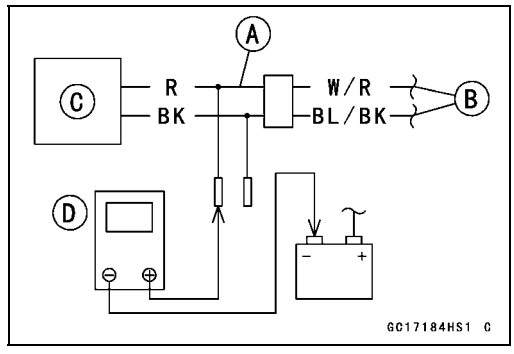

Fuel Injector Power Source Voltage
Connections to Adapter:
For Fuel Injector #1, #2, #3, #4
Digital Meter (+) → R (injector W/R) lead
Digital Meter (–) → Battery (–) Terminal

- Measure the power source voltage with the engine stopped.
- Turn the engine stop switch to run position.
- Turn the ignition switch on.

Power Source Voltage
Standard: Battery Voltage for 3 seconds, and then 0 V

- Turn the ignition switch off.

★If the reading stays on battery voltage and never shows 0 V, check the fuel pump relay (see Relay Circuit Inspection in the Electrical System chapter).
★If the fuel pump relay is normal, check the ECU for its ground and power supply (see ECU Power Supply Inspection).
★If the ground and power supply are good, replace the ECU (see ECU Removal/Installation).
★If there is still no battery voltage, check the fuel pump relay (see Relay Circuit Inspection in the Electrical System chapter).
★If the fuel pump relay is normal, check the power source wiring (see Fuel Injector Circuit).
★If the wiring is good, check the ECU for its ground and power supply (see ECU Power Supply Inspection).
★If the ground and power supply are good, replace the ECU (see ECU Removal/Installation).
★If the reading is in specification, check the output voltage (see Fuel Injector Output Voltage Inspection).

Fuel Injectors (Service Code 41, 42, 43, 44) (DTC P0201, P0202, P0203, P0204)

Fuel Injector Output Voltage Inspection

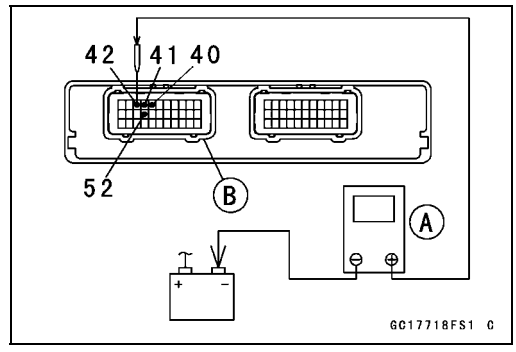

NOTE

○*Be sure the battery is fully charged.*

- Turn the ignition switch off.
- Remove the ECU (see ECU Removal).

○Do not disconnect the ECU connector.

- Connect a digital meter [A] to the connector [B] with the needle adapter set.

Special Tool - Needle Adapter Set: 57001-1457

Fuel Injector Output Voltage
Connections to ECU Connector:
For Fuel Injector #1
Digital Meter (+) → BL/BK lead (ECU terminal 42)
Digital Meter (–) → Battery (–) Terminal
For Fuel Injector #2
Digital Meter (+) → BL/R lead (ECU terminal 41)
Digital Meter (–) → Battery (–) Terminal
For Fuel Injector #3
Digital Meter (+) → BL/O lead (ECU terminal 40)
Digital Meter (–) → Battery (–) Terminal
For Fuel Injector #4
Digital Meter (+) → BL/G lead (ECU terminal 52)
Digital Meter (–) → Battery (–) Terminal

- Measure the output voltage with the engine stopped and with the connector joined.
- Turn the engine stop switch to run position.
- Turn the ignition switch on.

Output Voltage
Standard: Battery Voltage for 3 seconds, and then 0 V

- Turn the ignition switch off.

★If the reading is in specification, check the ECU for its ground and power supply (see ECU Power Supply Inspection).

★If the ground and power supply are good, replace the ECU (see ECU Removal/Installation).

Fuel Injectors (Service Code 41, 42, 43, 44) (DTC P0201, P0202, P0203, P0204)

★If the reading is out of the specification, remove the ECU and check the wiring for continuity between main harness connectors.
○Disconnect the ECU and injector connector.

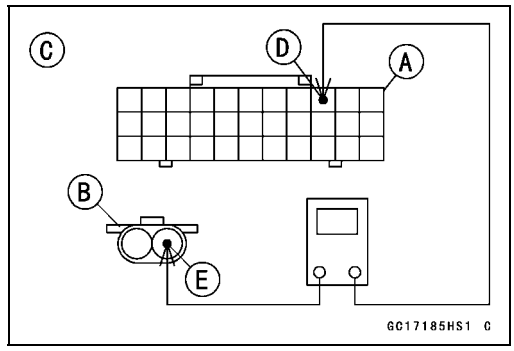

Wiring Continuity Inspection
ECU Connector (Gray) [A] ←→ Fuel Injector Connector [B]
For Fuel Injector #1 [C]
ECU Terminal 42 [D] ←→ Fuel Injector Terminal [E]
For Fuel Injector #2
ECU Terminal 41 ←→ Fuel Injector Terminal
For Fuel Injector #3
ECU Terminal 40 ←→ Fuel Injector Terminal
For Fuel Injector #4
ECU Terminal 52 ←→ Fuel Injector Terminal

★If the wiring is good, check the ECU for its ground and power supply (see ECU Power Supply Inspection).
★If the ground and power supply are good, replace the ECU (see ECU Removal/Installation).

Fuel Injector Fuel Line Inspection

● Remove the throttle body assy (see Throttle Body Assy Removal).
● Check the fuel injector fuel line for leakage as follows.
○Connect a commercially available vacuum/pressure pump [A] to the nipple of the delivery pipe [B] with the fuel hose [C] (both ends with the clamps [D]) as shown.
Rear Side View [E]

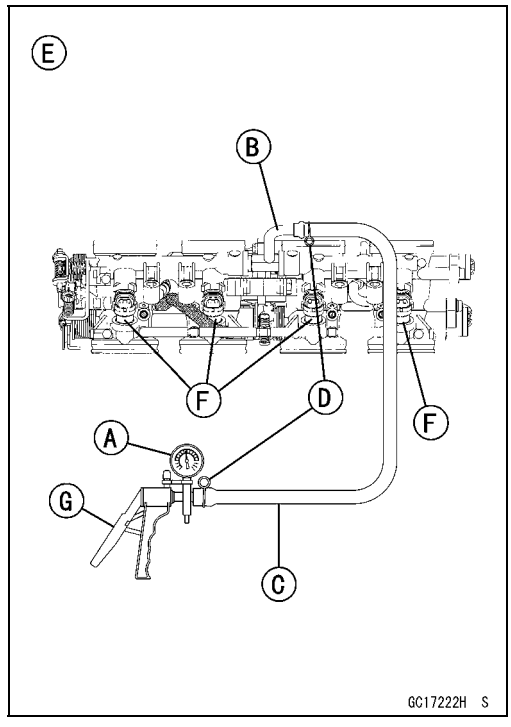

○Apply soap and water solution to the areas [F] as shown.
○Watching the pressure gauge, squeeze the pump lever [G], and build up the pressure until the pressure reaches the maximum pressure.

Fuel Injector Fuel Line Maximum Pressure
Standard: 300 kPa (3.06 kgf/cm², 43 psi)

NOTICE
During pressure testing, do not exceed the maximum pressure for which the system is designed.

○Watch the gauge for at least 6 seconds.
★If the pressure holds steady, the fuel line is good.
★If the pressure drops at once or if bubbles are found in the area, the fuel line is leaking. Replace the delivery pipe, fuel injectors and related parts.
○Repeat the leak test, and check the fuel line for no leakage.
● Install the throttle body assy (see Throttle Body Assy Installation).
● Start the engine and check for fuel leakage.

Fuel Injectors (Service Code 41, 42, 43, 44) (DTC P0201, P0202, P0203, P0204)

Fuel Injector Circuit

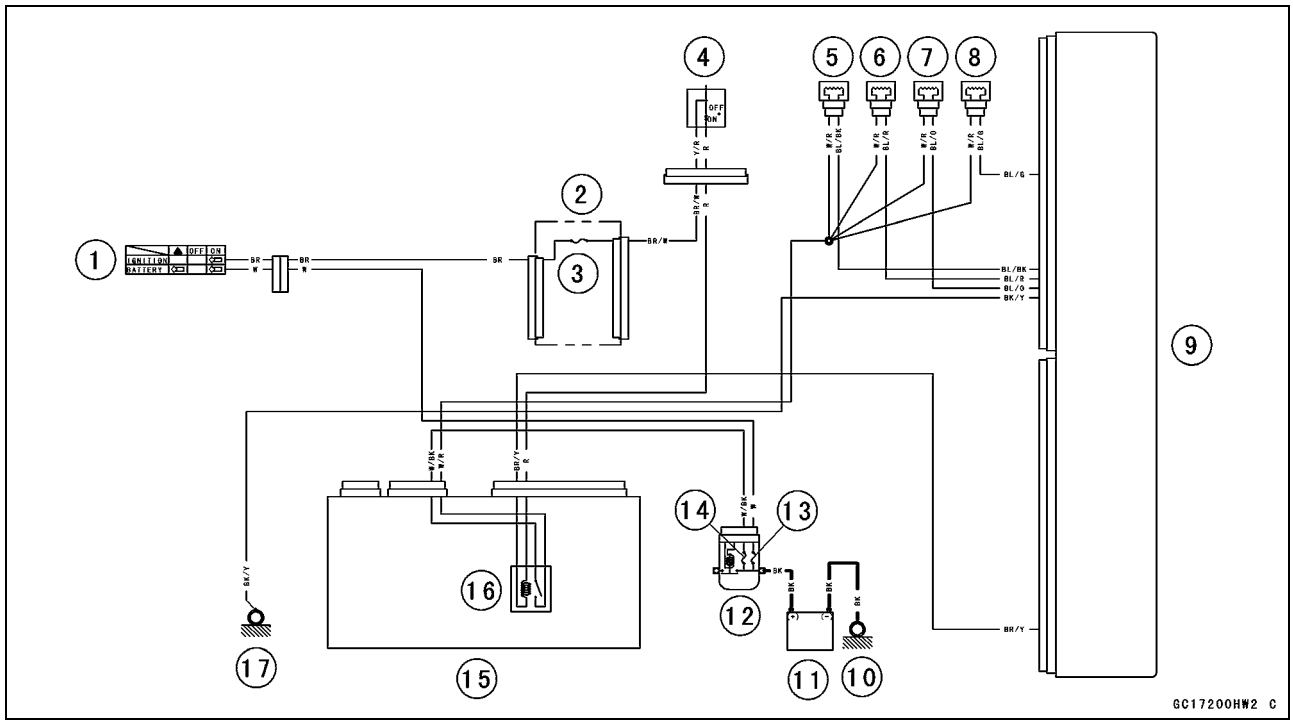

1. Ignition Switch
2. Fuse Box (1)
3. Ignition Fuse 15 A
4. Engine Stop Switch
5. Fuel Injector #1
6. Fuel Injector #2
7. Fuel Injector #3
8. Fuel Injector #4
9. ECU
10. Engine Ground
11. Battery 12 V 8 Ah
12. Starter Relay
13. Main Fuse 30 A
14. ECU Fuse 15 A
15. Relay Box
16. Fuel Pump Relay
17. Frame Ground (9)

Stick Coils #1, #2, #3, #4 (Service Code 51, 52, 53, 54) (DTC P0351, P0352, P0353, P0354)

Inspect the eligible stick coil according to the following service code or DTC.

Service Code 51/DTC P0351 → Stick Coil #1
Service Code 52/DTC P0352 → Stick Coil #2
Service Code 53/DTC P0353 → Stick Coil #3
Service Code 54/DTC P0354 → Stick Coil #4

Stick Coil Removal/Installation

● Refer to the Stick Coil Removal/Installation in the Electrical System chapter.

Stick Coil Primary Winding Resistance Inspection

● Refer to the Stick Coil Inspection in the Electrical System chapter.

★If the reading is within the standard, check the input voltage (see Stick Coil Input Voltage Inspection).

Stick Coil Input Voltage Inspection

NOTE

○*Be sure the battery is fully charged.*

● Turn the ignition switch off.
● Remove the ECU (see ECU Removal).
○Do not disconnect the ECU connectors.
● Connect a digital meter [A] to the connector [B] with the needle adapter set.

Special Tool - Needle Adapter Set: 57001-1457

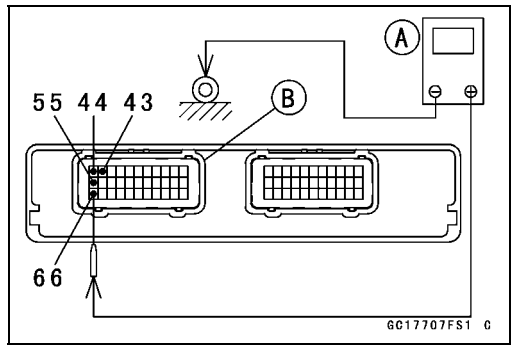

Stick Coil Input Voltage
Connections to ECU Connector:
For Stick Coil #1
Digital Meter (+) → BK lead (terminal 44)
Digital Meter (–) → Battery (–) Terminal
For Stick Coil #2
Digital Meter (+) → BK/R lead (terminal 55)
Digital Meter (–) → Battery (–) Terminal
For Stick Coil #3
Digital Meter (+) → BK/O lead (terminal 66)
Digital Meter (–) → Battery (–) Terminal
For Stick Coil #4
Digital Meter (+) → BK/G lead (terminal 43)
Digital Meter (–) → Battery (–) Terminal

● Measure the input voltage to each primary winding of the stick coils with the engine stopped and with the connectors joined.
● Turn the engine stop switch to run position.
● Turn the ignition switch on.

Input Voltage
Standard: Battery Voltage

Stick Coils #1, #2, #3, #4 (Service Code 51, 52, 53, 54) (DTC P0351, P0352, P0353, P0354)

● Turn the ignition switch off.
★If the input voltage is out of the standard, check the wiring for continuity (see Stick Coil Circuit).
★If the wiring is good, check the ECU for its ground and power supply (see ECU Power Supply Inspection).
★If the ground and power supply are good, replace the ECU (see ECU Removal/Installation).
★If the input voltage is within the standard, check the ECU for its ground and power supply (see ECU Power Supply Inspection).
★If the ground and power supply are good, replace the ECU (see ECU Removal/Installation).

Stick Coil Circuit

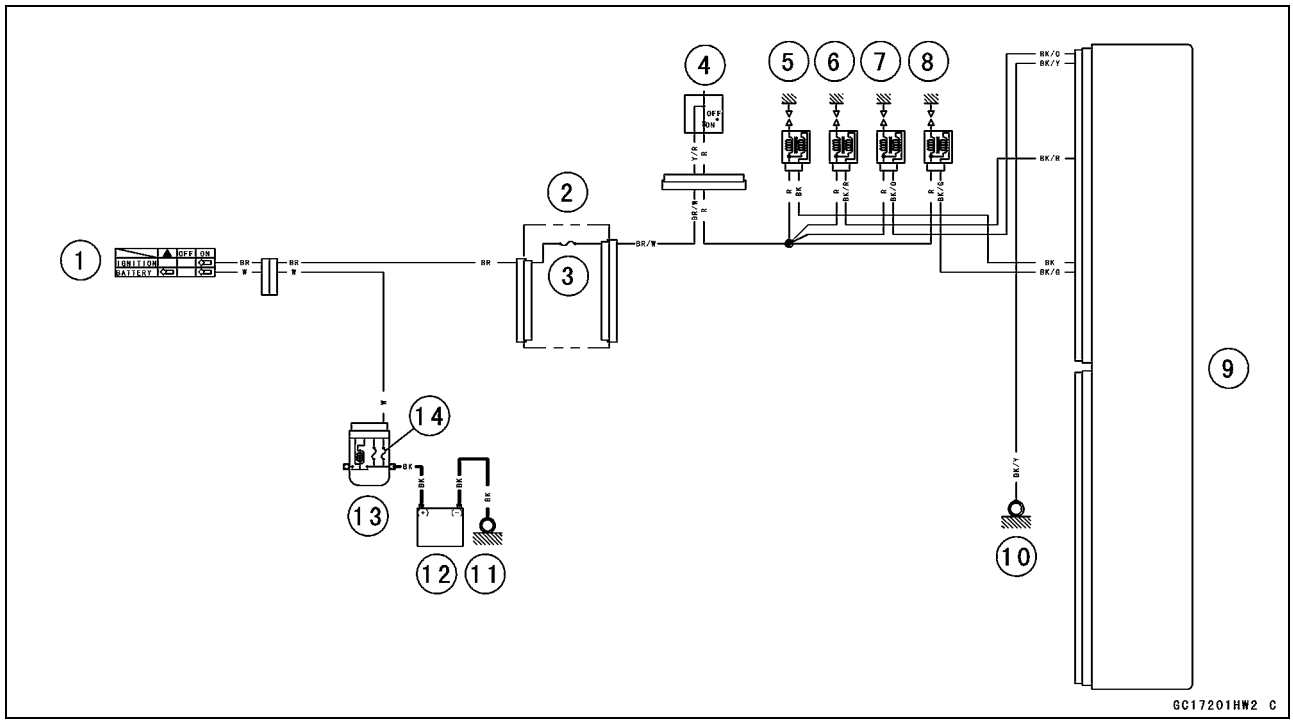

1. Ignition Switch
2. Fuse Box (1)
3. Ignition Fuse 15 A
4. Engine Stop Switch
5. Stick Coil #1
6. Stick Coil #2
7. Stick Coil #3
8. Stick Coil #4
9. ECU
10. Frame Ground (9)
11. Engine Ground
12. Battery 12 V 8 Ah
13. Starter Relay
14. Main Fuse 30 A

Radiator Fan Relay (Service Code 56) (DTC P0480)

Radiator Fan Relay Removal/Installation

○The radiator fan relay is built in the relay box [A].

● Refer to the Relay Box Removal in the Electrical System chapter.

Radiator Fan Relay Inspection

● Refer to the Relay Circuit Inspection in the Electrical System chapter.

★If the radiator fan relay is normal, check the wiring for continuity (see Radiator Fan Relay Circuit).

★If the wiring is good, check the ECU for its ground and power supply (see ECU Power Supply Inspection).

★If the ground and power supply are good, replace the ECU (see ECU Removal/Installation).

Radiator Fan Relay Circuit

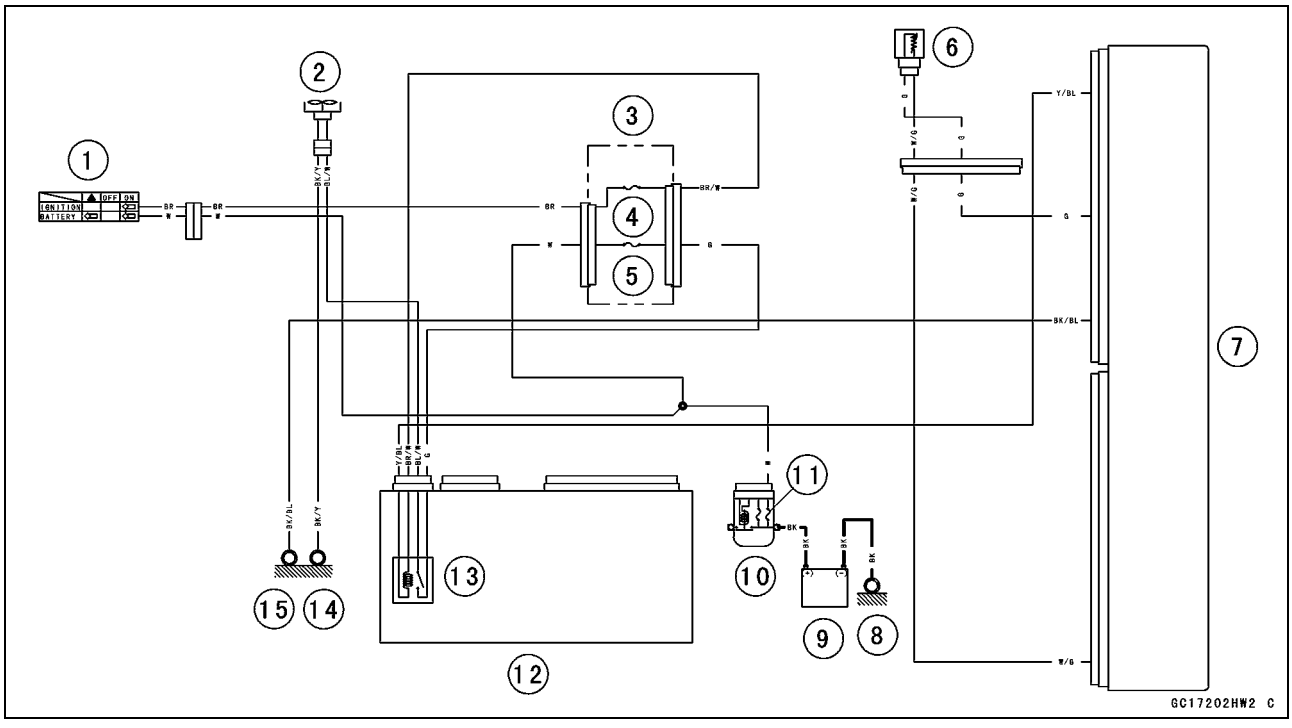

1. Ignition Switch
2. Fan Motor
3. Fuse Box (1)
4. Ignition Fuse 15 A
5. Fan Fuse 15 A
6. Water Temperature Sensor
7. ECU
8. Engine Ground
9. Battery 12 V 8 Ah
10. Starter Relay
11. Main Fuse 30 A
12. Relay Box
13. Radiator Fan Relay
14. Frame Ground (8)
15. Frame Ground (7)

Subthrottle Valve Actuator (Service Code 62) (DTC P2100)

Subthrottle Valve Actuator Removal

NOTICE
Do not remove the subthrottle valve actuator [A] since it has been adjusted and set with precision at the factory. **Never drop the throttle body assy especially on a hard surface. Such a shock to the subthrottle valve actuator can damage it.**

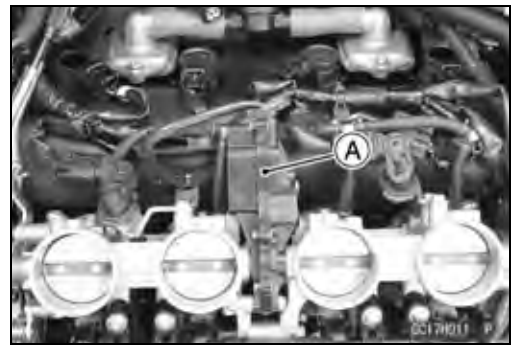

Subthrottle Valve Actuator Inspection

NOTE

○*Be sure the battery is fully charged.*

- Remove the air cleaner housing (see Air Cleaner Housing Removal).
- Turn the ignition switch on.
- Check to see that all the subthrottle valves [A] open and close smoothly.
- Turn the ignition switch off.

★If the subthrottle valves do not operate, check the subthrottle valve actuator resistance (see Subthrottle Valve Actuator Resistance Inspection).

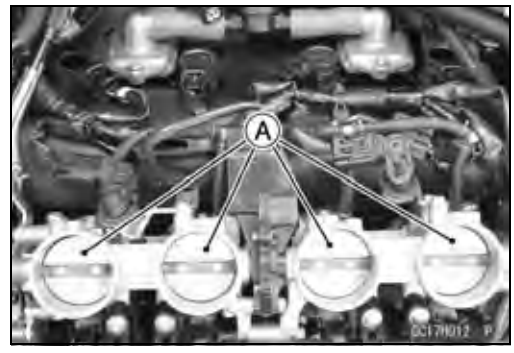

Subthrottle Valve Actuator Resistance Inspection

- Turn the ignition switch off.
- Remove the air cleaner housing (see Air Cleaner Housing Removal).
- Disconnect the subthrottle valve actuator connector [A].

- Connect a digital meter to the subthrottle valve actuator connector [A].
- Measure the subthrottle valve actuator resistance.

Subthrottle Valve Actuator Resistance

Connections:	**Y/BK lead [1] ←→ P/BL lead [2]**
	G lead [3] ←→ BK/O lead [4]
Standard:	**About 5.2 ~ 7.8 Ω**

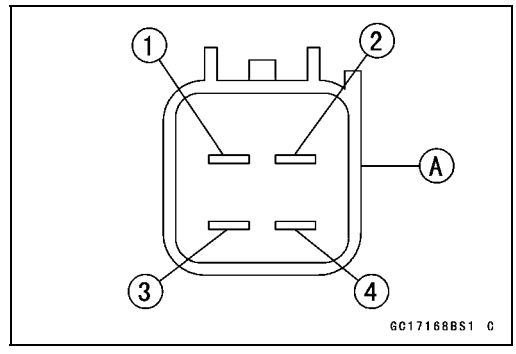

★If the reading is out of the standard, replace the throttle body assy (see Throttle Body Assy Removal/Installation).

★If the reading is within the standard, check the input voltage (see Subthrottle Valve Actuator Input Voltage Inspection).

Subthrottle Valve Actuator (Service Code 62) (DTC P2100)

Subthrottle Valve Actuator Input Voltage Inspection

NOTE

○*Be sure the battery is fully charged.*

- Turn the ignition switch off.
- Remove the air cleaner housing (see Air Cleaner Housing Removal).
- Disconnect the subthrottle valve actuator connector and connect the measuring adapter [A] between these connectors as shown.
  Main Harness [B]
  Subthrottle Valve Actuator [C]

Special Tool - Measuring Adapter: 57001-1700

- Connect the peak voltage adapter [D] and a digital meter [E] to the measuring adapter leads.

Special Tool - Peak Voltage Adapter: 57001-1415
Type: KEK-54-9-B

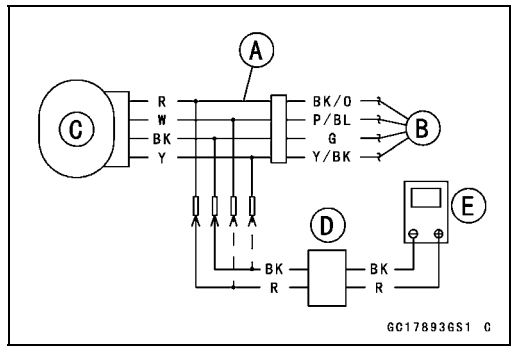

Subthrottle Valve Actuator Input Voltage
Connections to Adapter:

(I) Digital Meter (+) → R (actuator BK/O) lead
Digital Meter (–) → BK (actuator G) lead
(II) Digital Meter (+) → W (actuator P/BL) lead
Digital Meter (–) → Y (actuator Y/BK) lead

- Measure the actuator input voltage with the engine stopped and with the connector joined.
- Turn the ignition switch on.

Input Voltage
Standard: About DC 8.5 ~ 10.5 V and then 0 V or
About DC 8.5 ~ 10.5 V

- Turn the ignition switch off.

★If the reading is in specification, but the actuator does not operate, replace the throttle body assy (see Throttle Body Assy Removal/Installation).

★If the reading is out of the specification, remove the ECU and check the wiring for continuity between main harness connectors.

○Disconnect the ECU and actuator connectors.

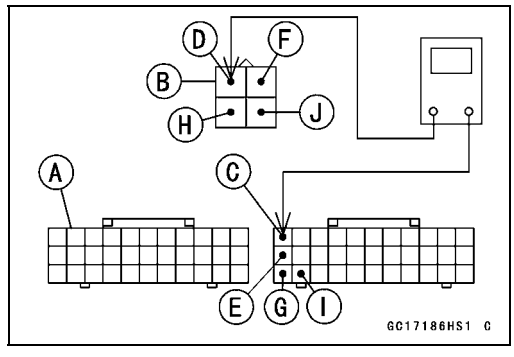

Wiring Continuity Inspection
ECU Connector [A] ←→
Subthrottle Valve Actuator Connector [B]
ECU Terminal 1 [C] ←→ Actuator Terminal [D]
ECU Terminal 12 [E] ←→ Actuator Terminal [F]
ECU Terminal 23 [G] ←→ Actuator Terminal [H]
ECU terminal 24 [I] ←→ Actuator Terminal [J]

★If the wiring is good, check the ECU for its ground and power supply (see ECU Power Supply Inspection).

★If the ground and power supply are good, replace the ECU (see ECU Removal/Installation).

Subthrottle Valve Actuator (Service Code 62) (DTC P2100)

Subthrottle Valve Actuator Circuit

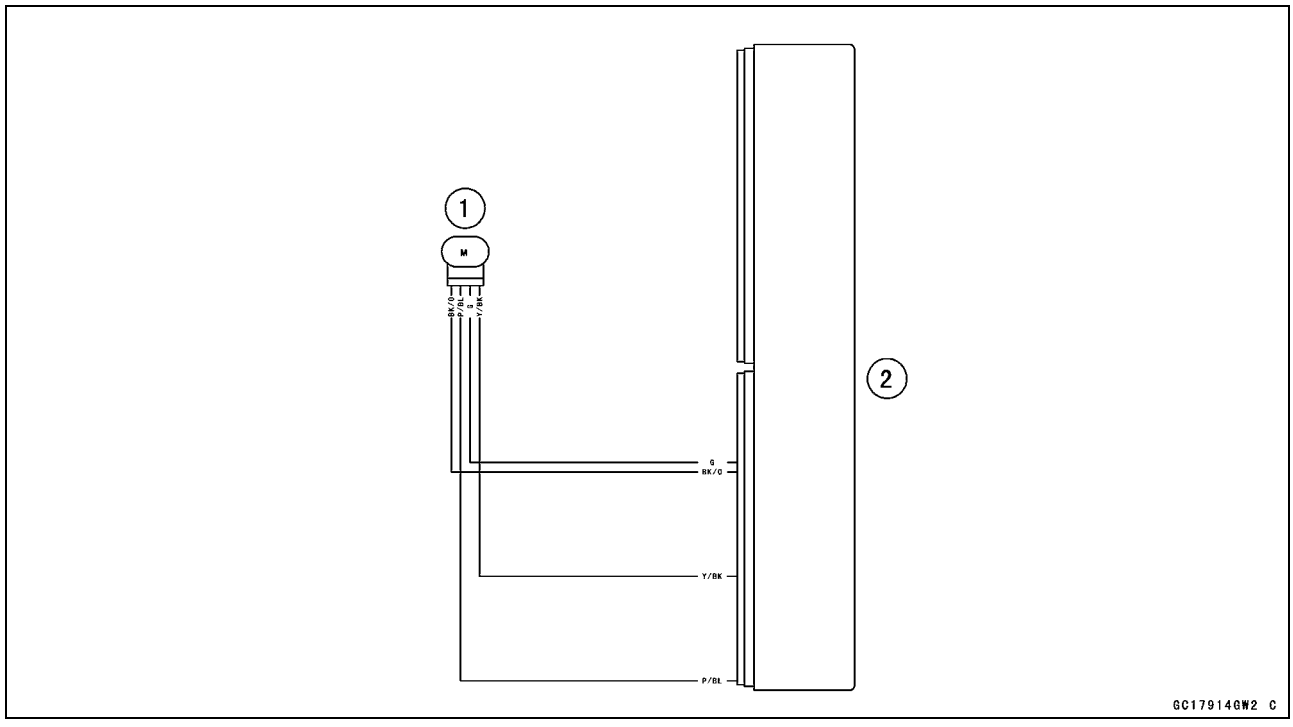

1. Subthrottle Valve Actuator
2. ECU

Air Switching Valve (Service Code 64) (DTC P0410)

Air Switching Valve Removal/Installation

● Refer to the Air Switching Valve Removal/Installation in the Engine Top End chapter.

Air Switching Valve Inspection

● Refer to the Air Switching Valve Unit Test in the Electrical System chapter.

★If the air switching valve is normal, check the wiring for continuity (see Air Switching Valve Circuit).

★If the wiring is good, check the ECU for its ground and power supply (see ECU Power Supply Inspection).

★If the ground and power supply are good, replace the ECU (see ECU Removal/Installation).

Air Switching Valve Circuit

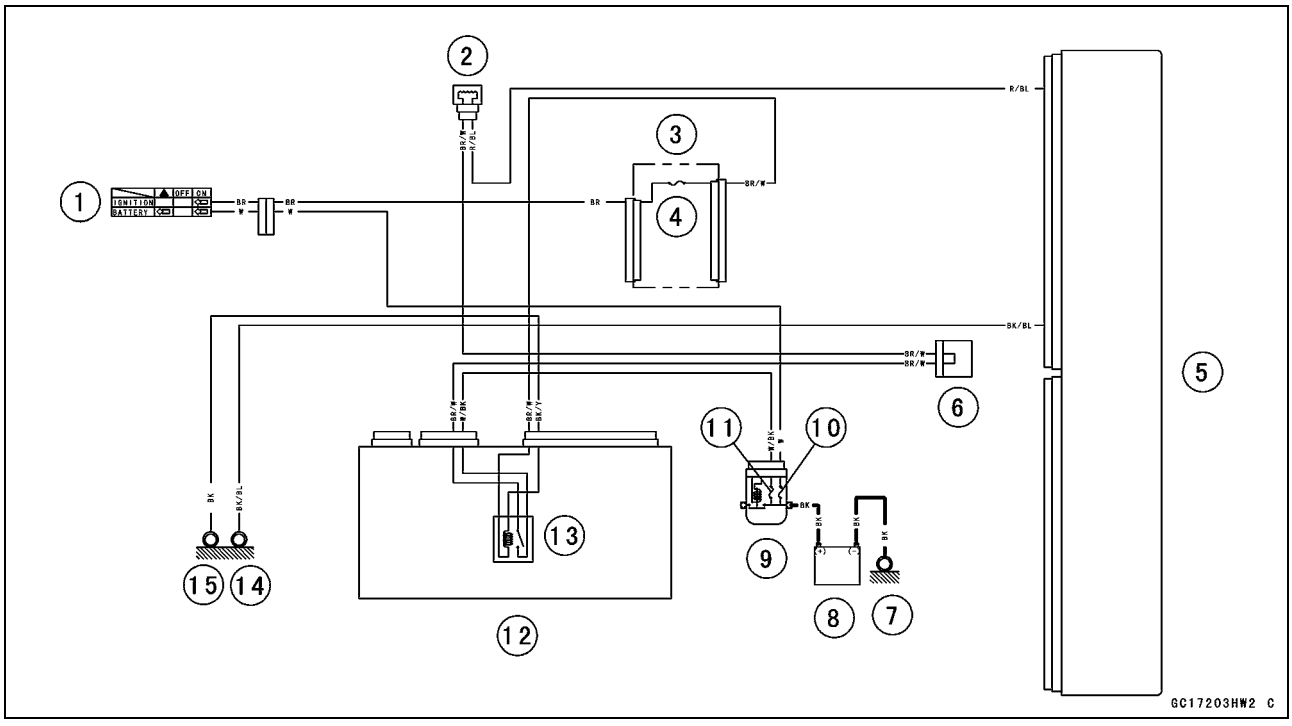

1. Ignition Switch
2. Air Switching Valve
3. Fuse Box (1)
4. Ignition Fuse 15 A
5. ECU
6. Joint Connector B
7. Engine Ground
8. Battery 12 V 8 Ah
9. Starter Relay
10. Main Fuse 30 A
11. ECU Fuse 15 A
12. Relay Box
13. ECU Main Relay
14. Frame Ground (7)
15. Frame Ground (6)

Oxygen Sensor Heater (Service Code 67) (DTC P0030)

Oxygen Sensor Heater Removal/Installation

The oxygen sensor heater is built in the oxygen sensor. So, the heater itself can not be removed. Remove the oxygen sensor (see Oxygen Sensor Removal in the Electrical System chapter).

Oxygen Sensor Heater Resistance Inspection

- Turn the ignition switch off.
- Remove:
  Fuel Tank (see Fuel Tank Removal)
- Disconnect the oxygen sensor lead connector [A].

- Connect a digital meter [A] to the oxygen sensor lead connector [B].
- Measure the oxygen sensor heater resistance.

Oxygen Sensor Heater Resistance
Connections: BK lead [C] ←→ BK lead [D]
Standard: 11.7 ~ 15.5 Ω @20°C (68°F)

★If the reading is out of the standard, replace the sensor.
★If the reading is within the standard, check the power source voltage (see Oxygen Sensor Heater Power Source Voltage Inspection).

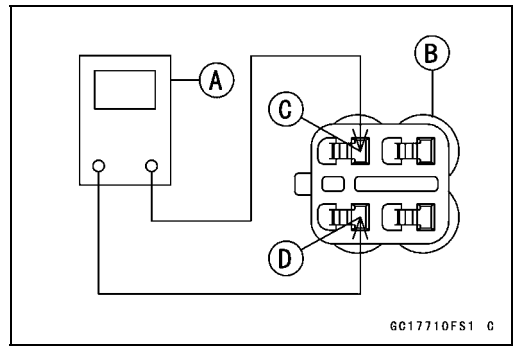

Oxygen Sensor Heater (Service Code 67) (DTC P0030)

Oxygen Sensor Heater Power Source Voltage Inspection

NOTE

○*Be sure the battery is fully charged.*

- Turn the ignition switch off.
- Remove:
  Fuel Tank (see Fuel Tank Removal)
- Disconnect the oxygen sensor lead connector and connect the measuring adapter [A] between these connectors.
  Main Harness [B]
  Oxygen Sensor [C]

Special Tool - Measuring Adapter: 57001-1700

- Connect a digital meter [D] to the measuring adapter lead.

Oxygen Sensor Power Source Voltage
Connections to Adapter:
Digital Meter (+) → R (main harness BR/W) lead
Digital Meter (–) → Frame Ground Terminal

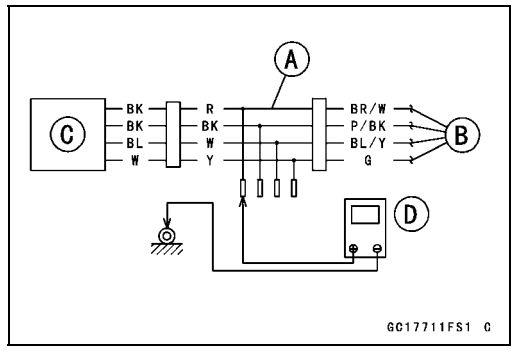

- Measure the power source voltage with the engine stopped and with the connector joined.
- Turn the ignition switch on.

Power Source Voltage
Standard: Battery Voltage

- Turn the ignition switch off.

★If the reading is in specification, but the problem still exists, replace the ECU (see ECU Removal/Installation).

★If the reading is out of the standard, check the following.
ECU Fuse 15 A (see Fuse Inspection in the Electrical System chapter)
Power Source Wiring (see Oxygen Sensor Circuit)

★If the fuse and wiring are good, remove the ECU and check the wiring for continuity between main harness connectors.

○Disconnect the ECU and sensor connectors.

Wiring Continuity Inspection
ECU Connector [A] ←→
Oxygen Sensor Connector [B]
ECU Terminal 64 [C] ←→ Sensor Terminal [D]

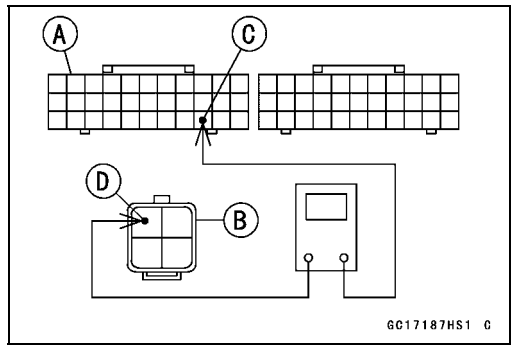

★If the wiring is good, check the ECU for its ground and power supply (see ECU Power Supply Inspection).

★If the ground and power supply are good, replace the ECU (see ECU Removal/Installation).

Oxygen Sensor Heater (Service Code 67) (DTC P0030)

Oxygen Sensor Circuit

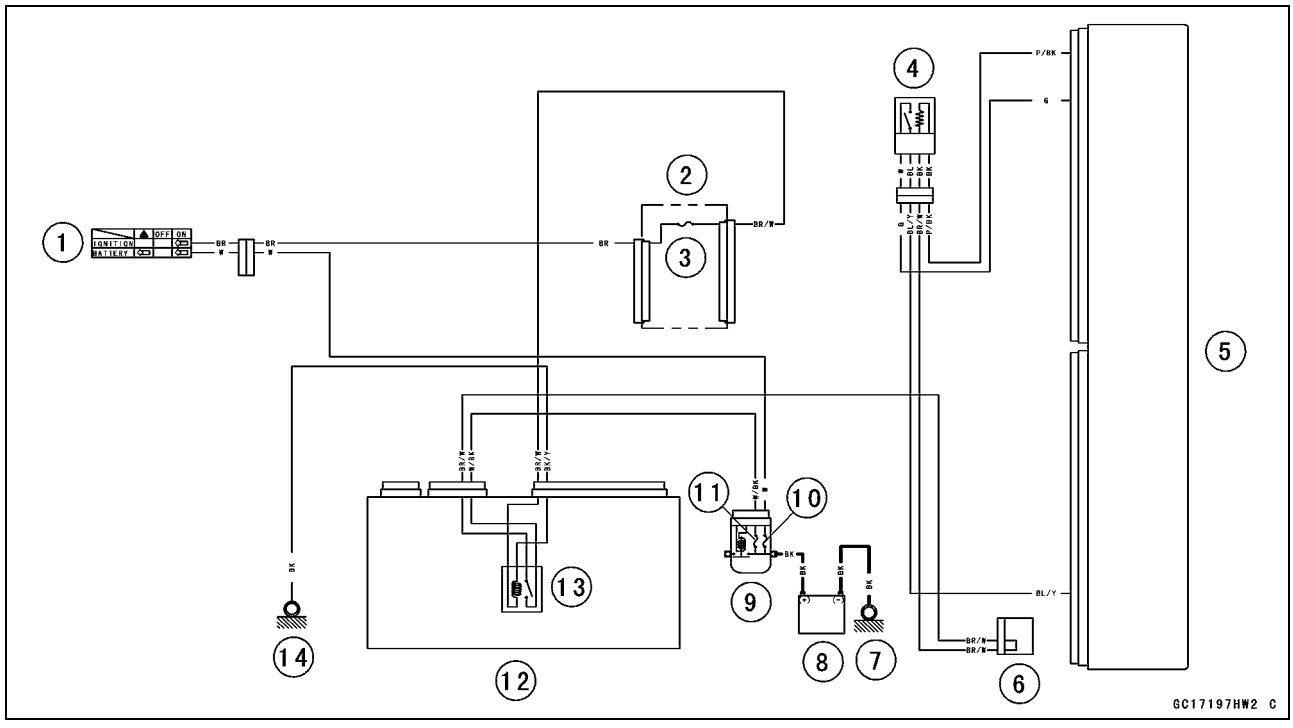

1. Ignition Switch
2. Fuse Box (1)
3. Ignition Fuse 15 A
4. Oxygen Sensor
5. ECU
6. Joint Connector B
7. Engine Ground
8. Battery 12 V 8 Ah
9. Starter Relay
10. Main Fuse 30 A
11. ECU Fuse 15 A
12. Relay Box
13. ECU Main Relay
14. Frame Ground (6)

Fuel Supply System (Service Code 94) (DTC P0170)

Fuel Supply System Inspection

NOTE

○*If the motorcycle has any other service code, first inspect the other service code.*

● Inspect the General fuel system (throttle body assy, air cleaner, fuel tank etc.).
★ If the General fuel system is good, check the ECU for its ground and power supply (see ECU Power Supply Inspection).
★ If the ground and power supply are good, replace the ECU (see ECU Removal/Installation).

Purge Valve (Service Code 3A, Equipped Models) (DTC P0443)

Purge Valve Removal/Installation

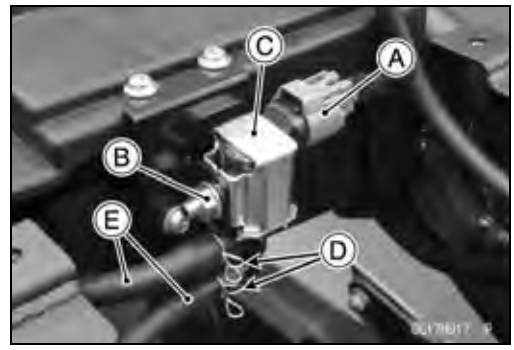

- Remove:
  Fuel Tank (see Fuel Tank Removal)
- Disconnect the purge valve connector [A].
- Remove the purge valve mounting nut [B].
- Remove the purge valve [C] from the bracket.
- Slide the clamps [D].
- Disconnect the hoses [E].
- Installation is the reverse of removal.
- Run the hoses correctly (see Cable, Wire, and Hose Routing section in the Appendix chapter).
- Tighten:

Torque - Purge Valve Mounting Nut: 6.9 N·m (0.70 kgf·m, 61 in·lb)

Purge Valve Inspection

- Remove the purge valve (see Purge Valve Removal/Installation).
- Connect a digital meter [A] to the purge valve terminals as shown.

Purge Valve Resistance
Standard: 30 ~ 34 Ω @20°C (68°F)

★If the resistance reading is out of the specified value, replace it with a new one.

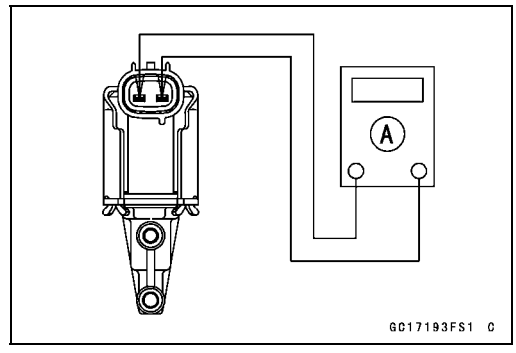

- Connect the 12 V battery [A] to the purge valve terminals as shown.

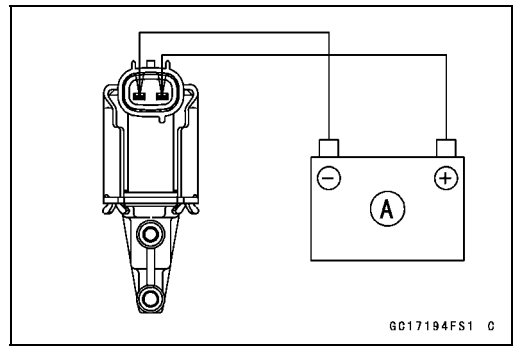

- Blow the air to the intake air duct [A], and make sure that the air flows from the outlet air duct [B].

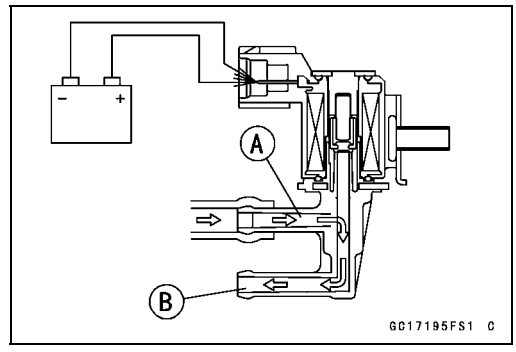

Purge Valve (Service Code 3A, Equipped Models) (DTC P0443)

- Disconnect the 12 V battery.
- Blow the air to the intake air duct [A] again, and make sure that the air does not flow from the outlet air duct [B].

★If the purge valve dose not operate as described, replace it with a new one.

★If the purge valve is good, check the wiring for continuity (see Purge Valve Circuit).

★If the wiring is good, check the ECU for its ground and power supply (see ECU Power Supply Inspection).

★If the ground and power supply are good, replace the ECU (see ECU Removal/Installation).

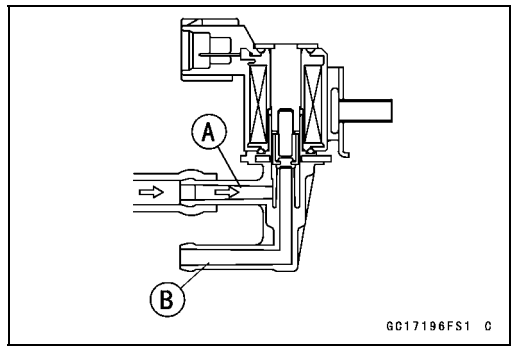

Purge Valve Circuit

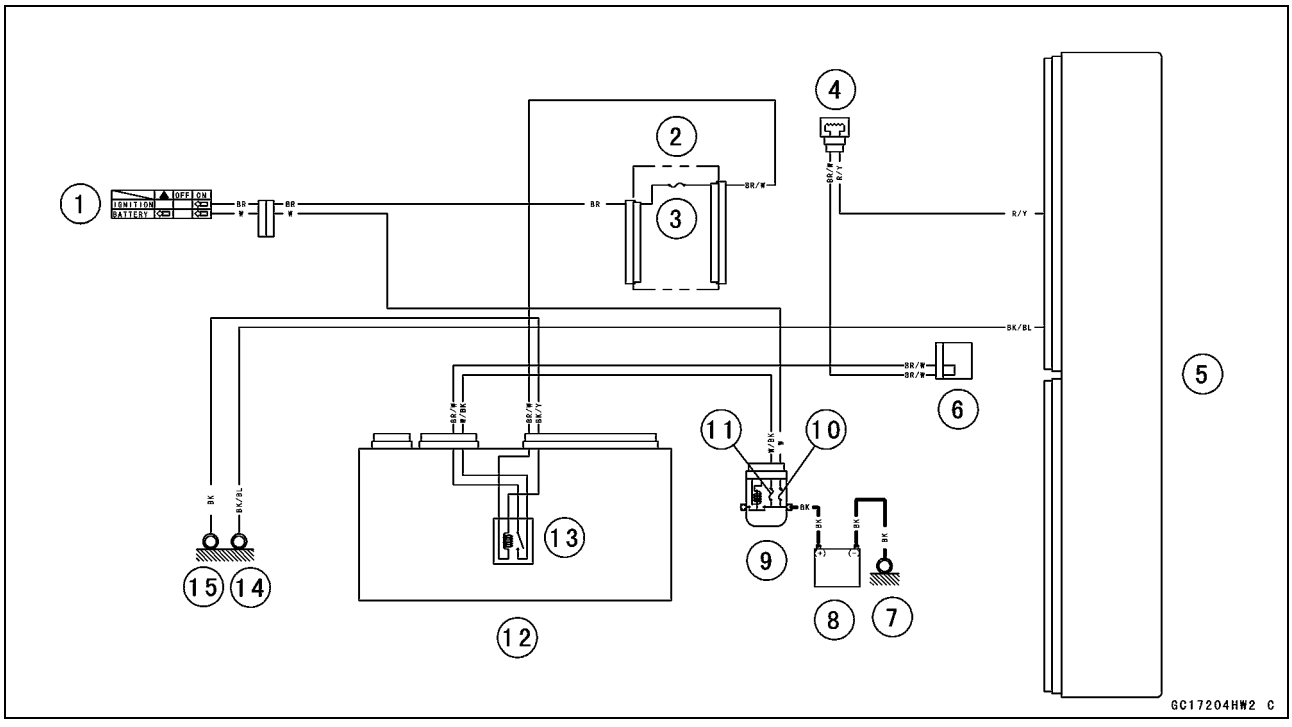

1. Ignition Switch
2. Fuse Box (1)
3. Ignition Fuse 15 A
4. Purge Valve
5. ECU
6. Joint Connector B
7. Engine Ground
8. Battery 12 V 8 Ah
9. Starter Relay
10. Main Fuse 30 A
11. ECU Fuse 15 A
12. Relay Box
13. ECU Main Relay
14. Frame Ground (7)
15. Frame Ground (6)

Warning Indicator Light (LED)

Yellow Engine Warning/Red Warning Indicator Light (LED) Inspection

Yellow Engine Warning Indicator Light (LED) [A]
Red Warning Indicator Light (LED) [B]

○In this model, the above mentioned warning indicator lights (LED) go on or blink by the data sent from the ECU.

● Refer to the Meter Unit Inspection in the Electrical System chapter.

Warning Indicator Light (LED) Circuit

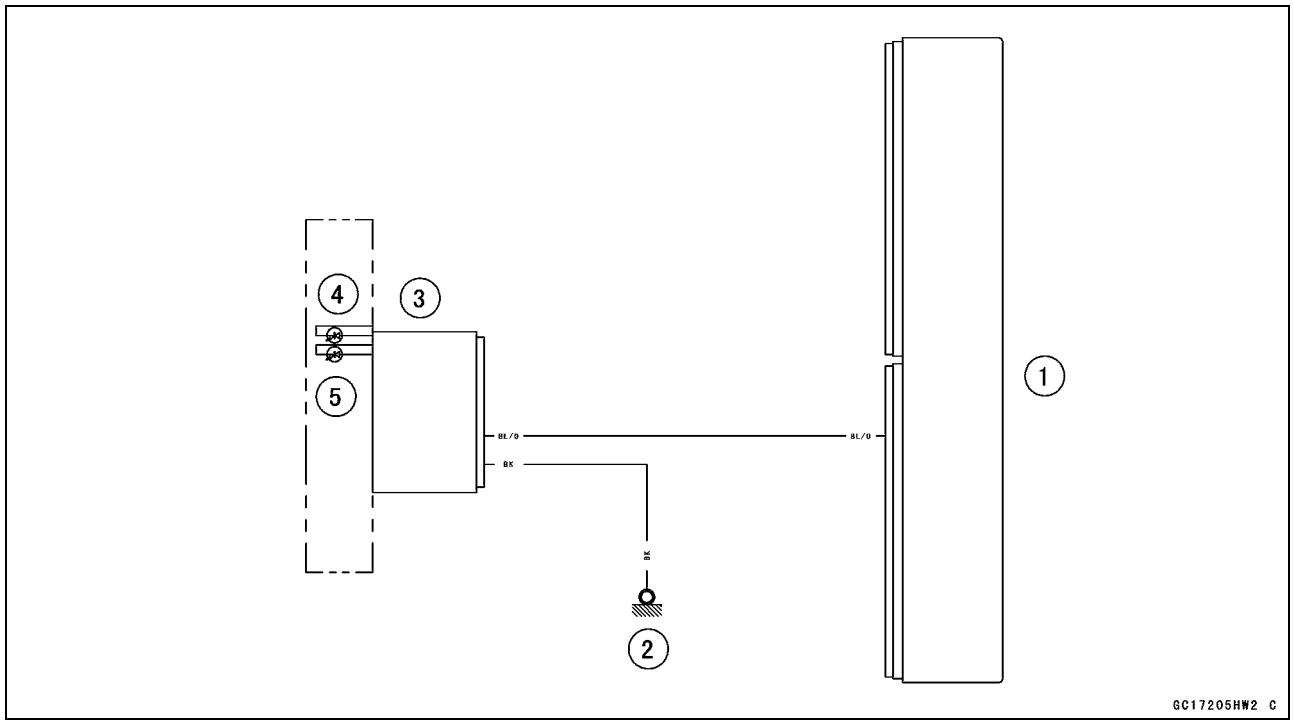

1. ECU
2. Frame Ground (10)
3. Meter Unit
4. Yellow Engine Warning Indicator Light (LED)
5. Red Warning Indicator Light (LED)

ECU

ECU Identification

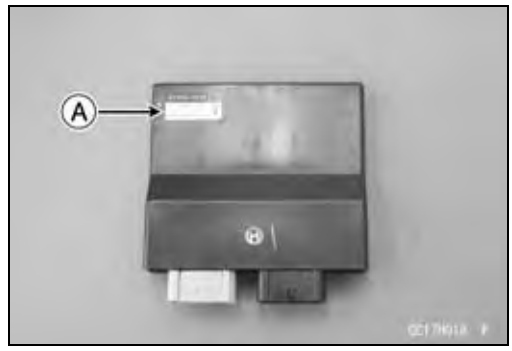

○Most countries have their own regulations, so each ECU has different characteristic. So, do not confuse ECU with each other and use only the ECU for your model. Otherwise, the motorcycle cannot clear the regulation.

ECU Identification (ZR900A Model)

Part Number [A]	Specification
21175-1226	CAL, without Immobilizer
21175-1238	US, with Immobilizer
	CA, without Immobilizer
21175-1280	MY, with Immobilizer

ECU Identification (ZR900B Model)

Part Number [A]	Specification
21175-1212	SEA-B1, with Immobilizer
	WVTAFULL, with Immobilizer
21175-1224	ID, with Immobilizer
21175-1225	CH, with Immobilizer
21175-1239	US, without Immobilizer
	CA, without Immobilizer
21175-1240	CAL, without Immobilizer
21175-1241	TH, with Immobilizer
21175-1245	AU, with Immobilizer
	MY, with Immobilizer

ECU Removal

NOTICE
Never drop the ECU especially on a hard surface. Such a shock to the ECU can damage it.

NOTE

○*Refer to the Immobilizer System Parts Replacement in the Electrical System chapter for the models with guards.*

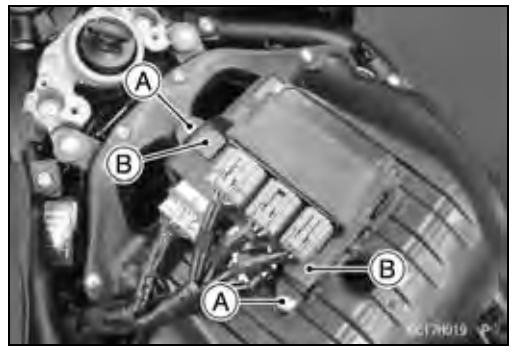

- Remove:
  Fuel Tank (see Fuel Tank Removal)
- For WVTA (FULL) model, remove the screws [A] and ECU guards [B].

ECU

- Disconnect:
  Relay Box Connectors [A]
  ECU Connectors [B]

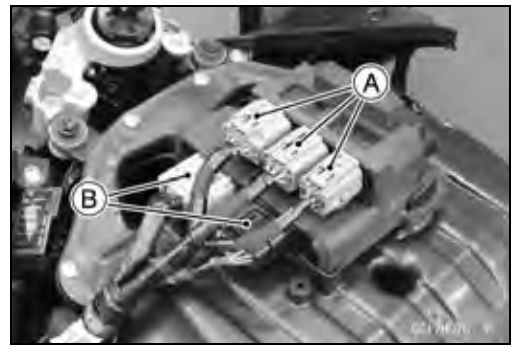

- Lift up the ECU [A] with rubber protector [B] to clear the projections [C].

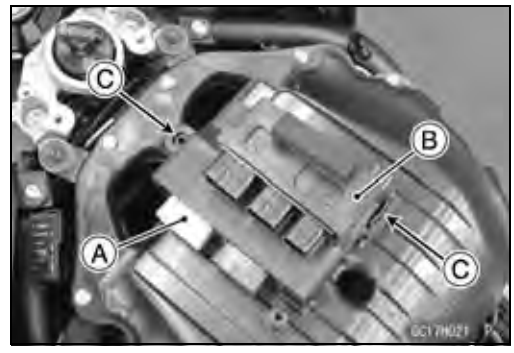

- Remove the ECU [A] from the rubber protector [B].

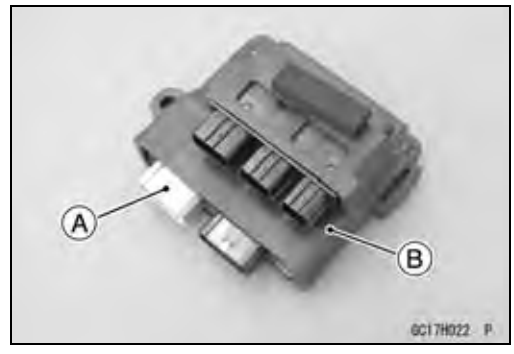

ECU Installation

- Installation is the reverse of removal.
- Insert the slit and hole of the rubber protector to the projections [A] of the air cleaner housing.
- Install the removed parts (see appropriate chapters).

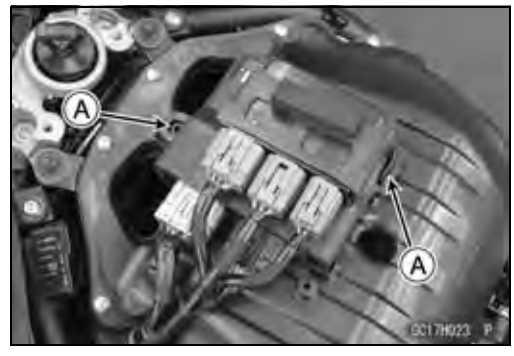

ECU Power Supply Inspection

- Visually inspect the ECU connectors.

★If the connector is clogged with mud or dust, blow it off with compressed air.

- Remove the ECU (see ECU Removal).
- Visually inspect the terminals [A] of the ECU and main harness connectors.

★If the terminals of the main harness connectors are damaged, replace the main harness.

★If the terminals of the ECU connectors are damaged, replace the ECU.

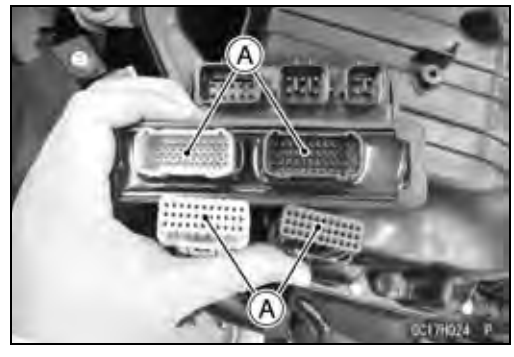

ECU

● Turn the ignition switch off.
● Disconnect the ECU connectors.
Gray Connector [A]
● Set a tester [B] and check the following wiring for continuity.

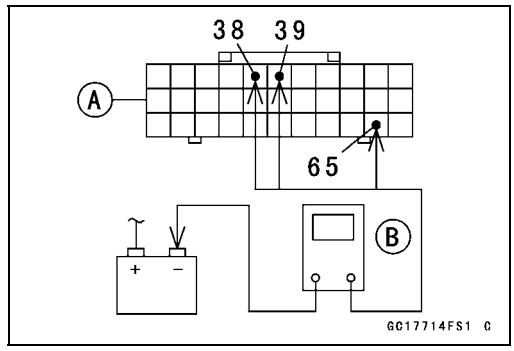

ECU Grounding Inspection
Connections:
(I) ECU Terminal 38, 39 or 65 ←→ Battery (–) Terminal
(II) Engine Ground ←→ Battery (–) Terminal
Criteria:
Both: 0 Ω

★If no continuity, check the connectors, the engine ground lead, or main harness, and repair or replace them if necessary.

★If the wiring is good, check the power source voltage of the ECU.

NOTE
○*Be sure the battery is fully charged.*

● Connect the ECU connectors.
● Connect a digital meter [A] to the connector (black) [B] with the needle adapter set.

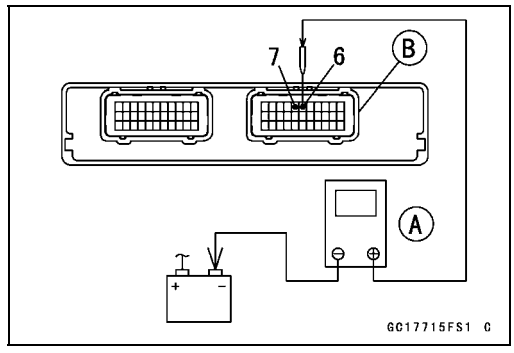

Special Tool - Needle Adapter Set: 57001-1457

ECU Power Supply Inspection
Connections:
(I) Digital Meter (+) → BR/W lead (terminal 6)
Digital Meter (–) → Battery (–) Terminal
(II) Digital Meter (+) → W/BK lead (terminal 7)
Digital Meter (–) → Battery (–) Terminal
Ignition Switch off:
BR/W lead (terminal 6): 0 V
W/BK lead (terminal 7): Battery Voltage
Ignition Switch on:
Both: Battery Voltage

★If the reading is out of the specification, check the following.
Main Fuse 30 A (see Fuse Inspection in the Electrical System chapter)
ECU Fuse 15 A (see Fuse Inspection in the Electrical System chapter)
ECU Main Relay (see Relay Circuit Inspection in the Electrical System chapter)
Power Source Wiring (see ECU Power Source Circuit)
★If the fuse, wiring and relay are good, replace the ECU (see ECU Removal/Installation).

ECU

ECU Power Source Circuit

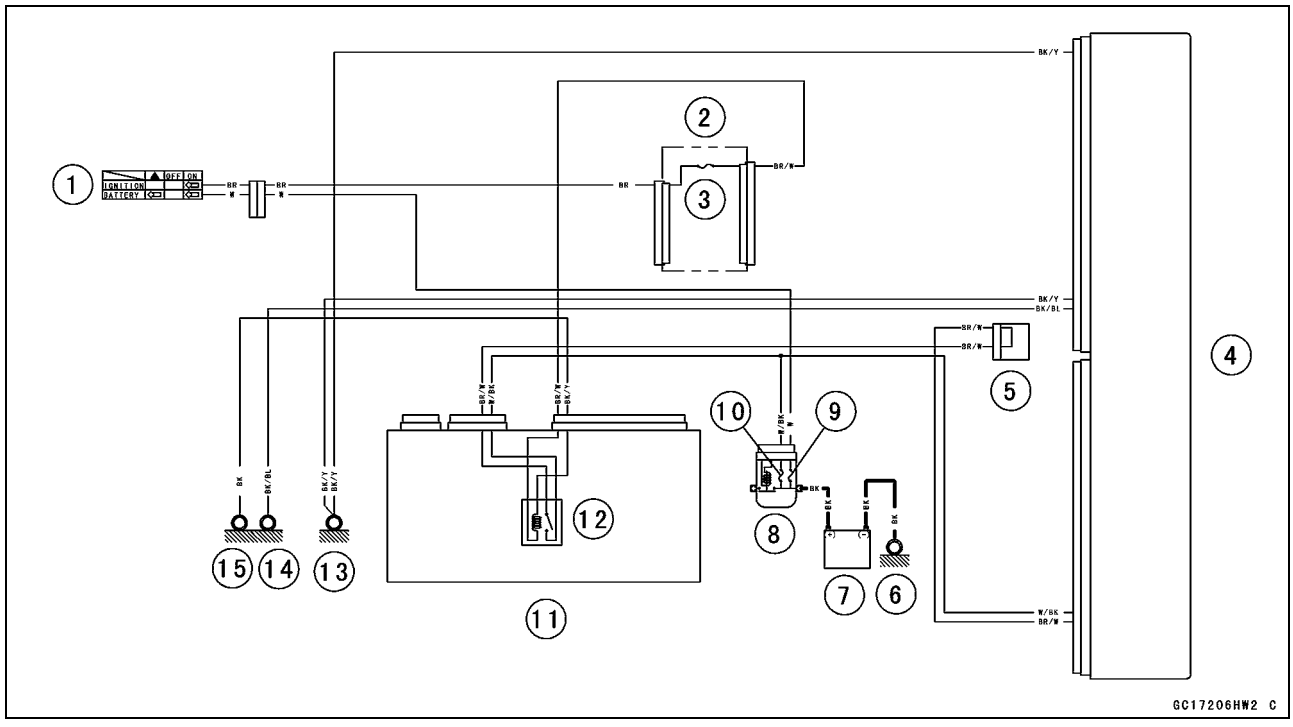

1. Ignition Switch
2. Fuse Box (1)
3. Ignition Fuse 15 A
4. ECU
5. Joint Connector B
6. Engine Ground
7. Battery 12 V 8 Ah
8. Starter Relay
9. Main Fuse 30 A
10. ECU Fuse 15 A
11. Relay Box
12. ECU Main Relay
13. Frame Ground (9)
14. Frame Ground (7)
15. Frame Ground (6)

DFI Power Source

ECU Fuse Removal

- Refer to the 30 A Main/15 A ECU Fuse Removal in the Electrical System chapter.

ECU Fuse Installation

★If a fuse fails during operation, inspect the DFI system to determine the cause, and then replace it with a new fuse of proper amperage.

- Refer to the Fuse Installation in the Electrical System chapter.

ECU Fuse Inspection

- Refer to the Fuse Inspection in the Electrical System chapter.

ECU Main Relay Removal/Installation

○The ECU main relay is built in the relay box [A].

- Refer to the Relay Box Removal in the Electrical System chapter.

ECU Main Relay Inspection

- Refer to the Relay Circuit Inspection in the Electrical System chapter.

Fuel Line

Fuel Pressure Inspection

NOTE

○*Be sure the battery is fully charged.*

● Remove:
Fuel Hose (see Fuel Hose Replacement in the Periodic Maintenance chapter)

○Be sure to place a piece of cloth around the fuel outlet pipe of the fuel pump and the delivery pipe of the throttle body assy.

⚠ WARNING

Fuel is flammable and explosive under certain conditions and can cause severe burns. Be prepared for fuel spillage; any spilled fuel must be completely wiped up immediately. When the fuel hose is disconnected, fuel spills out from the hose and the pipe because of residual pressure. Cover the hose connection with a piece of clean cloth to prevent fuel spillage.

● Install the fuel pressure gauge adapter [A] and fuel hoses (Special Tool: 57001-1607) [B] between the fuel outlet pipe and delivery pipe.
● Secure the fuel hoses with the clamps.
● Connect the pressure gauge [C] to the fuel pressure gauge adapter.

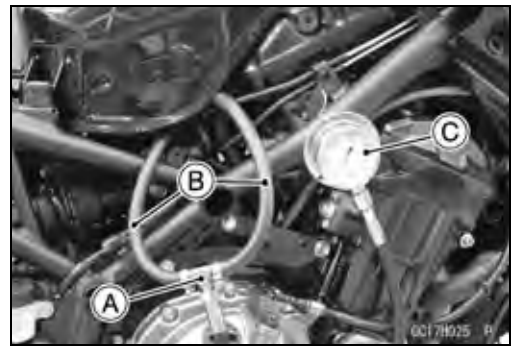

Special Tools - Oil Pressure Gauge, 5 kgf/cm²: 57001-125
Fuel Pressure Gauge Adapter: 57001-1593
Fuel Hose: 57001-1607

⚠ WARNING

Fuel is extremely flammable and can be explosive under certain conditions resulting in serious injury or death. Do not try to start the engine with the fuel hoses disconnected.

● Install the fuel tank temporarily (see Fuel Tank Installation).
● Turn the engine stop switch to run position.
● Turn the ignition switch on.

○The fuel pump should operate for 3 seconds, and then should stop.

NOTE

○*After turning on the engine stop switch and ignition switch, inspect the fuel leakage from the connected portion of the special tools.*

NOTICE

Do not drive the fuel pump 3 seconds or more without the fuel in the fuel tank. If the fuel pump is driven without the fuel, it may be damaged.

Fuel Line

- Start the engine, and let it idle.
- Measure the fuel pressure with the engine idling.

Fuel Pressure (with Engine Idling)
Standard: 294 kPa (3.0 kgf/cm², 43 psi)

NOTE

○*The gauge needle will fluctuate. Read the pressure at the average of the maximum and minimum indications.*

- Turn the ignition switch off.

★If the fuel pressure is much higher than specified, replace the fuel pump because the fuel pressure regulator in the fuel pump have been clogged or stuck.

★If the fuel pressure is much lower than specified, check the following.
Fuel Line Leakage (see Fuel Injector Fuel Line Inspection)
Amount of Fuel Flow (see Fuel Flow Rate Inspection)

- After above checks, measure the fuel pressure again.
- Remove the fuel pressure gauge, hoses and adapter.
- Install:
  Fuel Hose (see Fuel Hose Replacement in the Periodic Maintenance chapter)
- Start the engine and check for fuel leakage.

Fuel Flow Rate Inspection

⚠ WARNING

Gasoline is extremely flammable and can be explosive under certain conditions, creating the potential for serious burns. Make sure the area is well ventilated and free from any source of flame or sparks; this includes any appliance with a pilot light. Do not smoke. Turn the ignition switch off. Be prepared for fuel spillage; any spilled fuel must be completely wiped up immediately.

NOTE

○*Be sure the battery is fully charged.*

- Turn the ignition switch off.
- Wait until the engine cools down.
- Prepare a fuel hose (Special Tool: 57001-1607) and a measuring cylinder.

Special Tool - Fuel Hose: 57001-1607

Fuel Line

- Open the fuel tank cap [A] to lower the pressure in the tank.
- Disconnect the fuel hose from the fuel pump (see Fuel Tank Removal).

○Be sure to place a piece of cloth around the fuel outlet pipe of the fuel pump.

⚠ WARNING

Fuel is flammable and explosive under certain conditions and can cause severe burns. Be prepared for fuel spillage; any spilled fuel must be completely wiped up immediately. When the fuel hose is disconnected, fuel spills out from the hose and the pipe because of residual pressure. Cover the hose connection with a piece of clean cloth to prevent fuel spillage.

- Connect the prepared fuel hose [A] to the fuel outlet pipe.
- Secure the fuel hose with a clamp.
- Insert the fuel hose into the measuring cylinder [B].

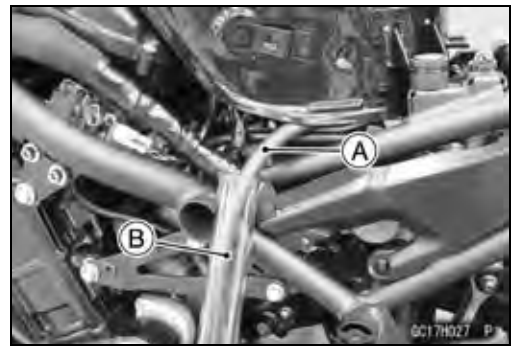

⚠ WARNING

Wipe off spilled out fuel immediately.
Be sure to hold the measuring cylinder vertical.

- Close the fuel tank cap.
- Turn the engine stop switch to run position.
- Turn the ignition switch on.

○The fuel pump should operate for 3 seconds, and then should stop.

NOTICE

Do not drive the fuel pump 3 seconds or more without the fuel in the fuel tank. If the fuel pump is driven without the fuel, it may be damaged.

- Measure the discharge for 3 seconds.

○Repeat this operation several times.

Amount of Fuel Flow
Standard: 50 mL (1.7 US oz.) or more for 3 seconds

- Turn the ignition switch off.

★If the fuel flow is much less than the specified, replace the fuel pump (see Fuel Pump Removal/Installation).

- Install the fuel tank (see Fuel Tank Installation).
- Start the engine and check for fuel leakage.

Fuel Pump

Fuel Pump Removal

⚠ WARNING

Gasoline is extremely flammable and can be explosive under certain conditions, creating the potential for serious burns. Make sure the area is well ventilated and free from any source of flame or sparks; this includes any appliance with a pilot light. Do not smoke. Turn the ignition switch off. Disconnect the battery (–) terminal. To avoid fuel spills, draw it from the tank when the engine is cold. Be prepared for fuel spillage; any spilled fuel must be completely wiped up immediately.

NOTICE

Never drop the fuel pump especially on a hard surface. Such a shock to the pump can damage it.

- Draw the fuel out from the fuel tank with a commercially available electric pump.
- Remove the fuel tank (see Fuel Tank Removal).

○Be careful of fuel spillage from the fuel tank since fuel still remains in the fuel tank and fuel pump. Plug the fuel pipe of the fuel tank.

- Turn the fuel tank upside down.
- Remove the fuel pump bolts [A], and take out the fuel pump [B].

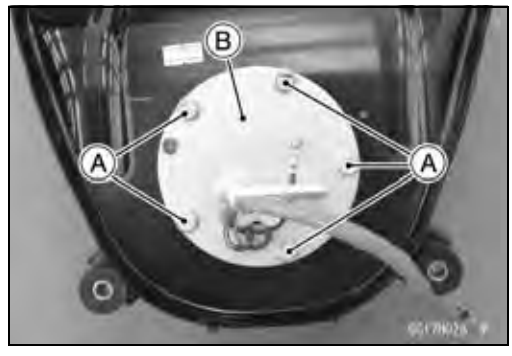

NOTICE

Do not pull the leads of the fuel pump. If they are pulled, the lead terminals may be damaged.

- Discard the fuel pump gasket [A].

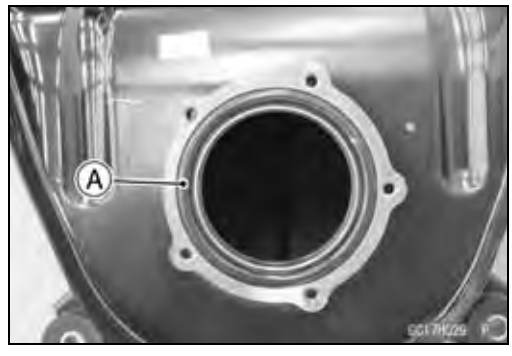

Fuel Pump

Fuel Pump Installation

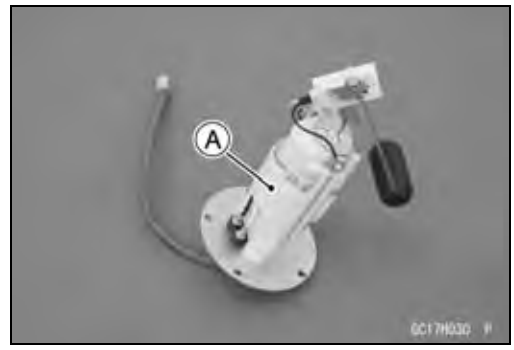

- Remove dirt or dust from the fuel pump [A] by lightly applying compressed air.
- Replace the fuel pump gasket with a new one.
- Apply grease to the fuel pump gasket.

NOTE

○*Be careful not to bend the fuel level sensor arm.*

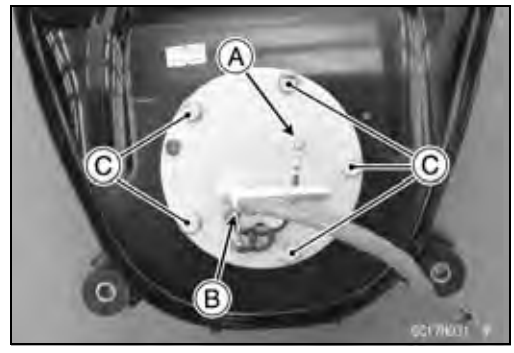

- Check that the fuel pump terminal [A] and band [B] are in place.
- Apply a non-permanent locking agent to the threads of the fuel pump bolts.
- Tighten the fuel pump bolts [C] to a snug fit.
- Tighten the fuel pump bolts alternating diagonally.

Torque - Fuel Pump Bolts: 9.8 N·m (1.0 kgf·m, 87 in·lb)

- Tighten the pump bolts again to check the tightness.

Fuel Pump Operation Inspection

NOTE

○*Be sure the battery is fully charged.*

- Turn the engine stop switch to run position.
- Turn the ignition switch on and make sure that the fuel pump operates (make light sounds) for 3 seconds, and then stops.
- Turn the ignition switch off.

★If the pump does not operate as described above, check the operating voltage (see Fuel Pump Operating Voltage Inspection).

Fuel Pump

Fuel Pump Operating Voltage Inspection

NOTE

○*Be sure the battery is fully charged.*

- Turn the ignition switch off.
- Remove the front seat (see Front Seat Removal in the Frame chapter).
- Disconnect the fuel pump lead connector and connect the measuring adapter [A] between these connectors as shown.
  Main Harness [B]
  Fuel Pump [C]

Special Tool - Measuring Adapter: 57001-1700

- Connect a digital meter [D] to the measuring adapter leads.

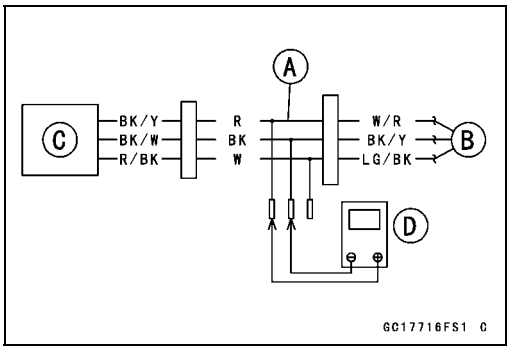

Fuel Pump Operating Voltage
Connections to Adapter:
Digital Meter (+) → R (pump BK/Y) lead
Digital Meter (–) → BK (pump BK/W) lead

- Measure the operating voltage with engine stopped and with the connector joined.
- Turn the engine stop switch to run position.
- Turn the ignition switch on.

Operating Voltage
Standard: Battery Voltage for 3 seconds, and then 0 V

- Turn the ignition switch off.

★If the reading stays on battery voltage and never shows 0 V, check the fuel pump relay (see Relay Circuit Inspection in the Electrical System chapter).
★If the fuel pump relay is normal, check the ECU for its ground and power supply (see ECU Power Supply Inspection).
★If the ground and power supply are good, replace the ECU (see ECU Removal/Installation).
★If there is still no battery voltage, check the fuel pump relay (see Relay Circuit Inspection in the Electrical System chapter).
★If the fuel pump relay is normal, check the wiring for continuity (see Fuel Pump Circuit).
★If the wiring is good, check the ECU for its ground and power supply (see ECU Power Supply Inspection).
★If the ground and power supply are good, replace the ECU (see ECU Removal/Installation).
★If the reading is in specification, but the pump does not operate, replace the fuel pump (see Fuel Pump Removal/Installation).

Fuel Pump

Pressure Regulator Removal

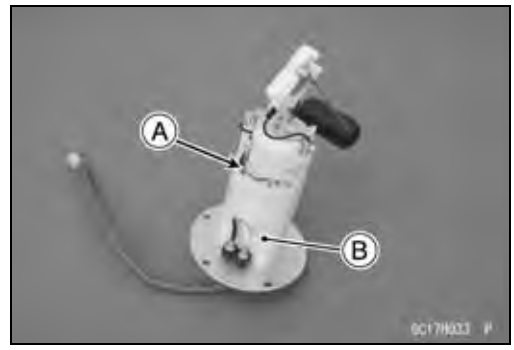

○The pressure regulator [A] is built into the fuel pump [B] and can not be removed.

Fuel Pump Relay Removal/Installation

○The fuel pump relay is built in the relay box [A].

● Refer to the Relay Box Removal in the Electrical System chapter.

Fuel Pump Relay Inspection

● Refer to the Relay Circuit Inspection in the Electrical System chapter.

Fuel Pump

Fuel Pump Circuit

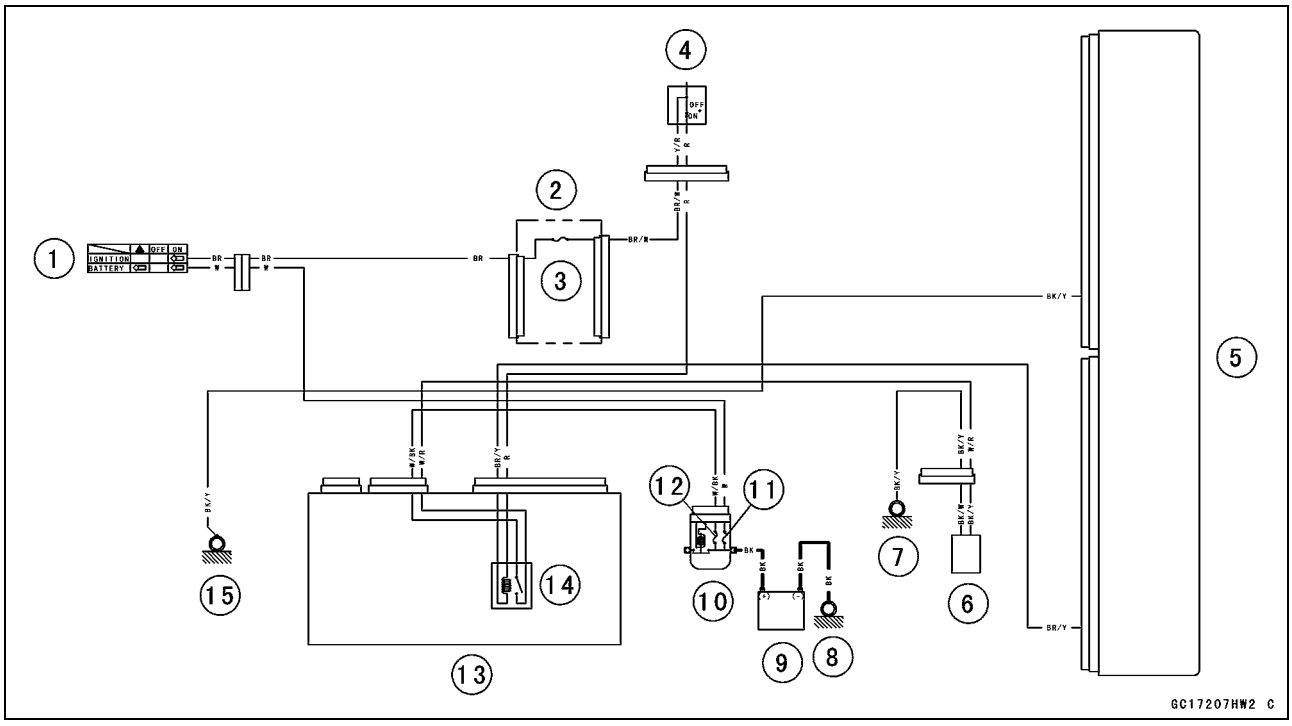

1. Ignition Switch
2. Fuse Box (1)
3. Ignition Fuse 15 A
4. Engine Stop Switch
5. ECU
6. Fuel Pump
7. Frame Ground (2)
8. Engine Ground
9. Battery 12 V 8 Ah
10. Starter Relay
11. Main Fuse 30 A
12. ECU Fuse 15 A
13. Relay Box
14. Fuel Pump Relay
15. Frame Ground (9)

Throttle Grip and Cables

Free Play Inspection

- Refer to the Throttle Control System Inspection in the Periodic Maintenance chapter.

Free Play Adjustment

- Refer to the Throttle Control System Inspection in the Periodic Maintenance chapter.

Cable Installation

- Install the throttle cables in accordance with the Cable, Wire, and Hose Routing section in the Appendix chapter.
- Install the lower ends of the throttle cables in the throttle pulley on the throttle body assy after installing the upper ends of the throttle cables in the grip.
- After installation, adjust each cable properly (see Throttle Control System Inspection in the Periodic Maintenance chapter).

⚠ WARNING

Operation with incorrectly routed or improperly adjusted cables could result in an unsafe riding condition. Be sure the cables are routed correctly and properly adjusted.

Cable Lubrication

- Refer to the Chassis Parts Lubrication in the Periodic Maintenance chapter.

Throttle Body Assy

Idle Speed Inspection/Adjustment

● Refer to the Idle Speed Inspection/Adjustment in the Periodic Maintenance chapter.

Synchronization Inspection/Adjustment

● Refer to the Engine Vacuum Synchronization Inspection in the Periodic Maintenance chapter.

Throttle Body Assy Removal

⚠ WARNING

Gasoline is extremely flammable and can be explosive under certain conditions, creating the potential for serious burns. Make sure the area is well ventilated and free from any source of flame or sparks; this includes any appliance with a pilot light. Do not smoke. Turn the ignition switch off. Be prepared for fuel spillage; any spilled fuel must be completely wiped up immediately.

NOTICE

Never drop the throttle body assy especially on a hard surface. Such a shock to the body assy can damage it.

● Remove:
Air Cleaner Housing (see Air Cleaner Housing Removal)
Fuel Hose (see Fuel Hose Replacement in the Periodic Maintenance chapter)

● Disconnect:
Intake Air Pressure Sensor #1 Connector [A]
Intake Air Pressure Sensor #2 Connector [B]
Subthrottle Valve Actuator Connector [C]
Main Throttle Sensor Connector [D]
Subthrottle Sensor Connector [E]
● Disconnect the vacuum hose [F].

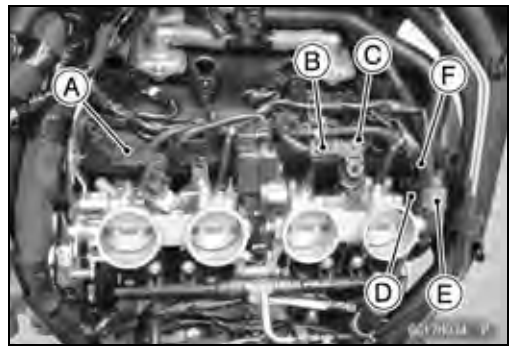

● Loosen the locknuts [A].
● Turn the adjusters [B] to give the more free play.

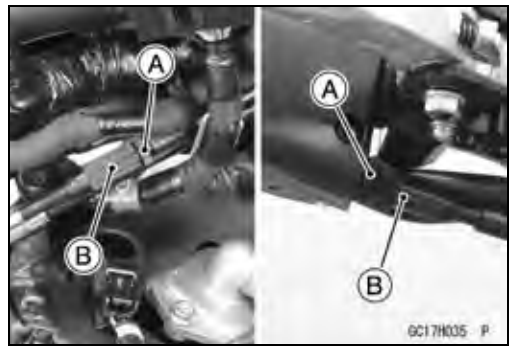

Throttle Body Assy

- Loosen the throttle body assy holder clamp bolts [A].

Special Tool - Carburetor Drain Plug Wrench, Hex 3: 57001-1269

- Remove the throttle body assy [A] from the throttle body assy holders.
- Disconnect the fuel injector connectors [B].
- Remove the clamps [C] from the delivery pipe.

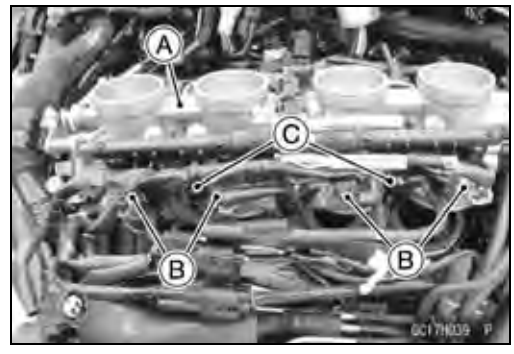

- Remove:
  Throttle Cable Holder Clamp [A]
  Throttle Cable Lower Ends [B]
  Throttle Body Assy [C]

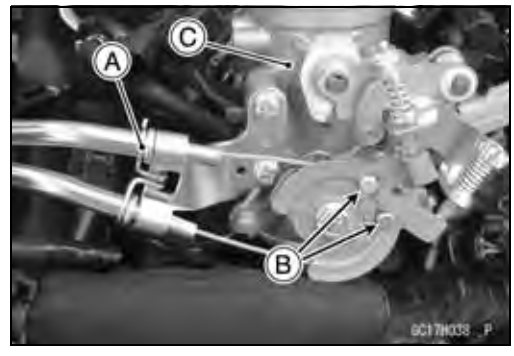

- After removing the throttle body assy, stuff pieces of lint -free, clean cloth into the throttle body assy holders.

NOTICE
If dirt gets into the engine, excessive engine wear and possible engine damage will occur.

Throttle Body Assy Installation

- Be sure to position the throttle body assy holder clamps in original position (see Throttle Body Assy Holder Installation in the Engine Top End chapter).
- Run the leads and hoses correctly (see Cable, Wire, and Hose Routing section in the Appendix chapter).

Throttle Body Assy

- Apply a thin coat of grease to the throttle cable lower ends.
- Fit the accelerator cable end [A] and the decelerator cable end [B] into the throttle pulley.

○The accelerator cable has a clamp [C].

- Install the clamp securely.
- Turn the throttle grip and make sure that the throttle pulley moves smoothly and return by spring force.

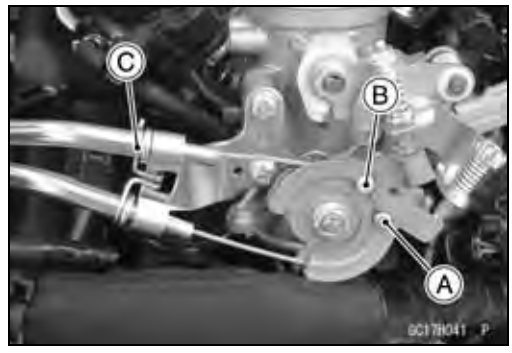

- Install the clamps [A] to the holes of delivery pipe.
- Connect the fuel injector connectors [B].

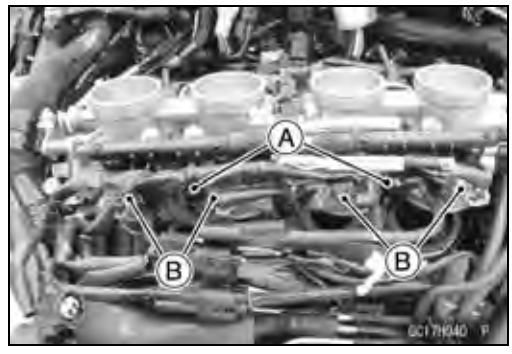

- Install the removed parts (see appropriate chapters).
- Adjust:

  Throttle Grip Free Play (see Throttle Control System Inspection in the Periodic Maintenance chapter)

  Idle Speed (see Idle Speed Adjustment in the Periodic Maintenance chapter)

Throttle Body Assy

Throttle Body Assy Disassembly

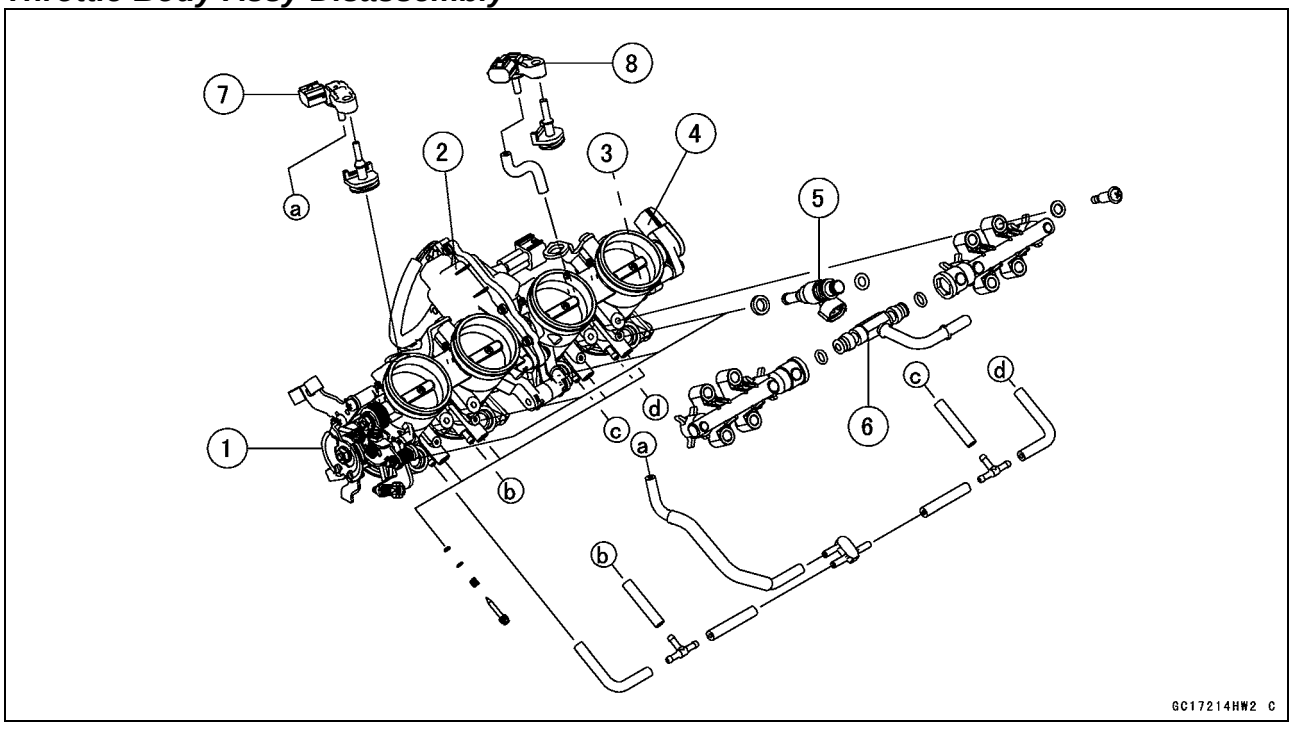

1. Throttle Body Assy
2. Subthrottle Valve Actuator
3. Main Throttle Sensor
4. Subthrottle Sensor
5. Fuel Injectors
6. Delivery Pipe Assy
7. Intake Air Pressure Sensor #1
8. Intake Air Pressure Sensor #2

NOTICE

Do not remove, disassemble or adjust the main throttle sensor, subthrottle sensor, subthrottle valve actuator, throttle link mechanism and throttle body assy, because they are adjust or set surely at the manufacturer. Adjustment of these parts could result in poor performance, requiring replacement of the throttle body assy.

- Remove the throttle body assy (see Throttle Body Assy Removal).
- Remove the delivery pipe assy mounting screws [A] to pull out the fuel injectors [B] from the throttle body assy together with the delivery pipe assy [C].

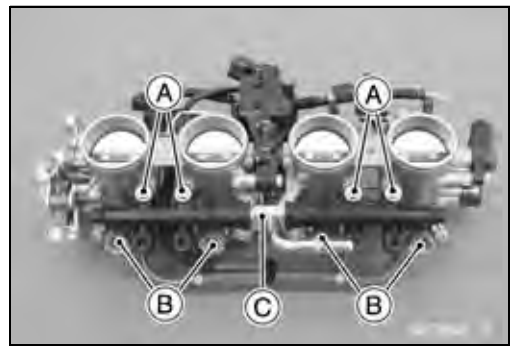

NOTE

○*Do not damage the insertion portions of the injectors when they are pulled out from the throttle body.*

Throttle Body Assy

● Remove the fuel injectors [A] from the delivery pipe assy [B].

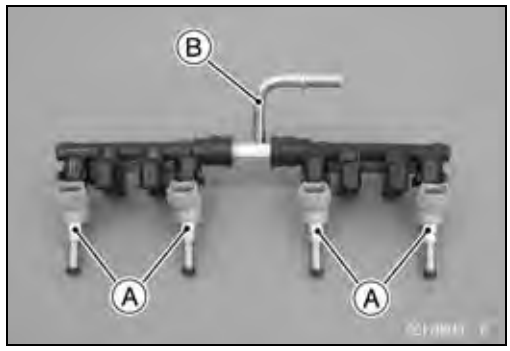

NOTE

○*Do not damage the insertion portions of the injectors when they are pulled out from the delivery pipe assy.*

NOTICE

Never drop the fuel injector especially on a hard surface. Such a shock to the injector can damage it.

Throttle Body Assy Assembly

● Before assembling, blow away dirt or dust from the throttle body and delivery pipe assy by applying compressed air.
● Replace the O-rings [A] of the joint pipe [B] with new ones.
● Apply engine oil to the new O-rings, and insert it to the delivery pipes [C].
○Insert the joint pipe so that the short side [D] faces right side.
○Left and right delivery pipes are identical.

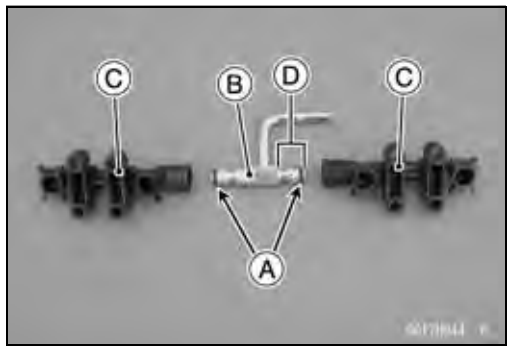

● Replace the O-rings [A] of each fuel injector [B] with new ones.
● Apply engine oil to the new O-rings, insert them to the delivery pipe assy and confirm whether the injectors turn smoothly or not.

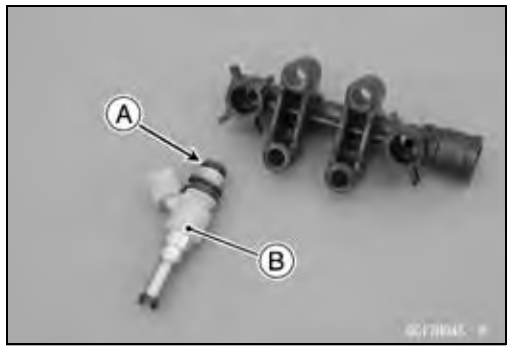

● Replace the dust seals [A] with new ones.
● Apply engine oil to the new dust seals.
● Install the fuel injectors along with the delivery pipe assy to the throttle body.
● Tighten:

Torque - Delivery Pipe Assy Mounting Screws: 3.5 N·m (0.36 kgf·m, 31 in·lb)

● Install the throttle body assy (see Throttle Body Assy Installation).

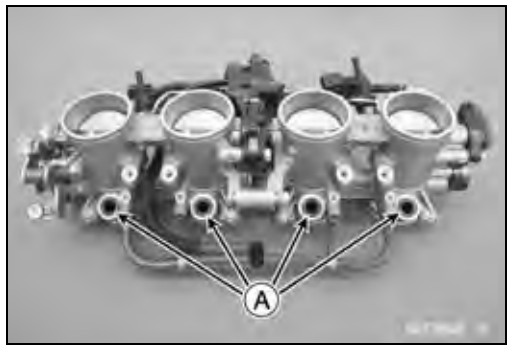

Air Cleaner

Air Cleaner Element Removal/Installation

● Refer to the Air Cleaner Element Replacement in the Periodic Maintenance chapter.

Air Cleaner Element Inspection

● Remove the air cleaner element (see Air Cleaner Element Replacement in the Periodic Maintenance chapter).
● Visually check the element [A] for tears or breaks.
★If the element has any tears or breaks, replace the element.

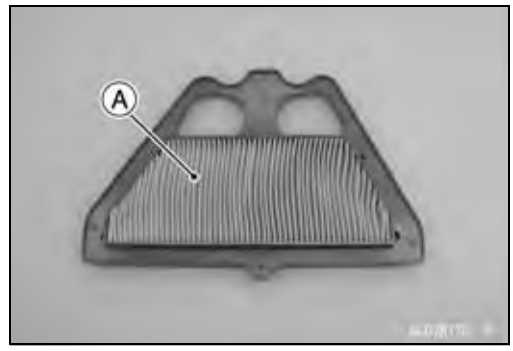

Air Cleaner Oil Draining

A drain hose is connected to the bottom of the air cleaner to drain water or oil accumulated in the cleaner part.

● Visually check the catch tank [A] of the drain hose, if the water or oil accumulates in the tank.
★If any water or oil accumulates in the catch tank, remove the catch tank from the drain hose and drain it.

⚠ WARNING

Oil on tires will make them slippery and can cause an accident and injury. Be sure to reinstall the catch tank after draining.

Air Cleaner Housing Removal

● Remove:
Fuel Tank (see Fuel Tank Removal)
ECU (see ECU Removal)
Connector Bracket [A]
● Slide the clamp [B].
● Disconnect:
Breather Hose [C]
Intake Air Temperature Sensor Connector [D]

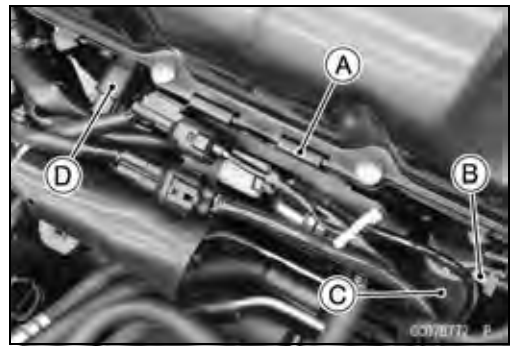

● Remove:
Bolts [A] and Washers

Air Cleaner

● Loosen the air cleaner housing clamp bolts [A] on both sides.

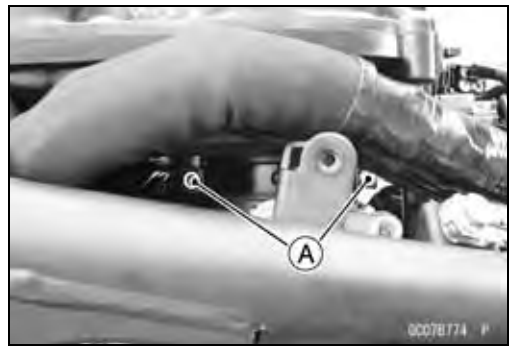

● Lift up the air cleaner housing, and disconnect the air switching valve hose [A].
● Slide the clamp [B], and disconnect the drain hose [C].
● After removing the air cleaner housing, cover the clean cloth on the throttle body assy.

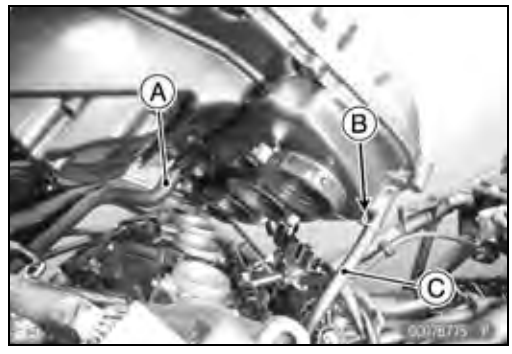

Air Cleaner Housing Installation

● Install the clamp bolt heads [A] outside as shown.
● Install the air switching valve hose [B] and drain hose [C] to the air cleaner housing.
● Install the air cleaner housing on the throttle body assy.
○Push in the ducts touch the stopper of the throttle body assy.
● Tighten:

Torque - Air Cleaner Housing Clamp Bolts: 2.0 N·m (0.20 kgf·m, 18 in·lb)

● Tighten the bolts [D] securely.
● Run the leads and hoses correctly (see Cable, Wire, and Hose Routing section in the Appendix chapter).
● Install the removed parts (see appropriate chapters).

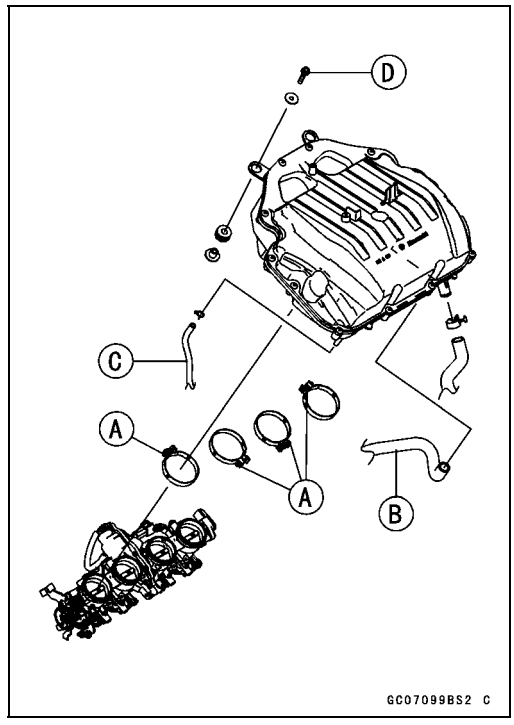

Fuel Tank

Fuel Tank Removal

⚠ WARNING

Gasoline is extremely flammable and can be explosive under certain conditions, creating the potential for serious burns. Make sure the area is well ventilated and free from any source of flame or sparks; this includes any appliance with a pilot light. Do not smoke. Turn the ignition switch off. Disconnect the battery (–) terminal. To avoid fuel spills, draw it from the tank when the engine is cold. Be prepared for fuel spillage; any spilled fuel must be completely wiped up immediately.

- Turn the ignition switch off.
- Wait until the engine cools down.
- Disconnect the battery (–) terminal (see Battery Removal in the Electrical System chapter).

- Open the fuel tank cap [A] to lower the pressure in the tank.

○During tank removal, keep the tank cap open to release pressure in the tank. This makes fuel spillage less.

- Draw the fuel out from the fuel tank with a commercially available pump [A].

○Use a soft plastic hose [B] as a pump intake hose in order to insert the hose smoothly.

○Put the hose through the fill opening [C] into the tank and draw the fuel out.

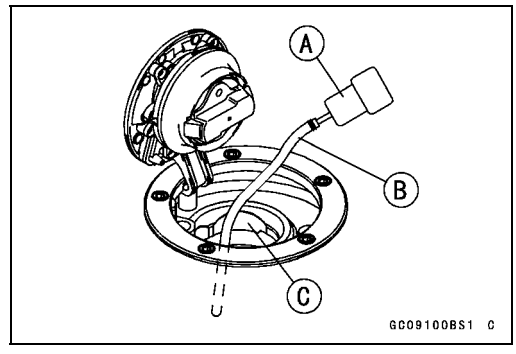

⚠ WARNING

Spilled fuel is flammable and can be explosive under certain conditions. The fuel can not be removed completely from the fuel tank. Be careful for remained fuel spillage.

- Remove:
  Side Cover (see Side Cover Removal in the Frame chapter)
  Fuel Tank Cover (see Fuel Tank Cover Removal in the Frame chapter)
  Ignition Switch Cover (see Ignition Switch Cover Removal in the Frame chapter)
  Fuel Tank Bolts [A]

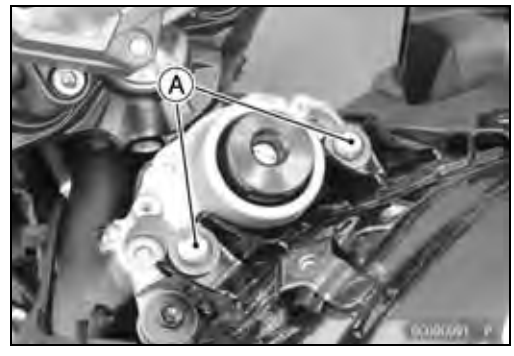

Fuel Tank

● Remove:
Seat Bracket Bolts [A]
Seat Bracket [B]

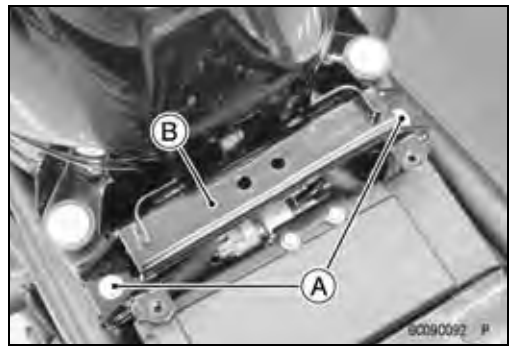

● Remove:
Fuel Tank Bolt [A]
● Slide the clamps [B], and disconnect the drain hose [C] and breather hose [D].

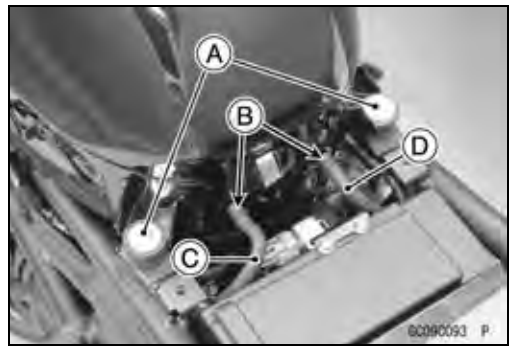

● Disconnect the fuel pump lead connector [A].

● Be sure to place a piece of cloth around the fuel hose joint.
● Wipe off the dirt of the surface [A] around the connection using a cloth or a soft brush.

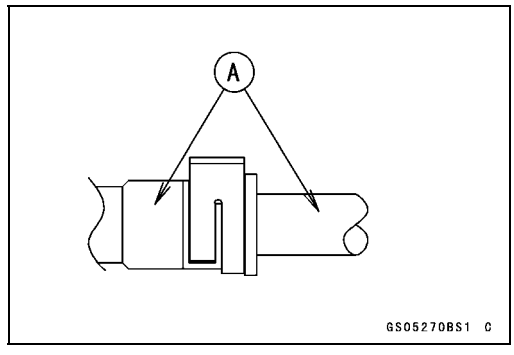

Fuel Tank

When removing with flat tip screwdriver

- Insert the flat tip screwdriver [A] into slit on the joint lock [B].
- Turn the driver to disconnect the joint lock.

When removing with fingers

- Open and push up [C] the joint lock with your fingers.

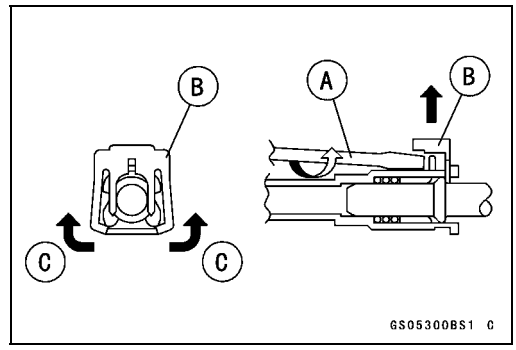

NOTICE

Prying or excessively widening the joint lock ends for fuel hose removal will permanently deform the joint lock, resulting in a loose or incomplete lock that may allow fuel to leak and create the potential for a fire explosion. To prevent fire or explosion from a damaged joint lock, do not pry or excessively widen the joint lock ends when removing the fuel hose. The joint lock has a retaining edge that locks around the housing.

- Pull [A] the fuel hose joint [B] out of the outlet pipe.

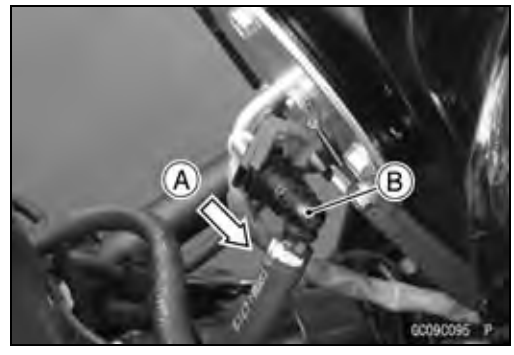

⚠ WARNING

Fuel is flammable and explosive under certain conditions and can cause severe burns. Be prepared for fuel spillage; any spilled fuel must be completely wiped up immediately. When the fuel hose is disconnected, fuel spills out from the hose and the pipe because of residual pressure. Cover the hose connection with a piece of clean cloth to prevent fuel spillage.

- Close the fuel tank cap.
- Remove the fuel tank, and place it on a flat surface.

○Do not apply the load to the fuel pipe of the fuel pump.

- Clean the pipe [A].
- Cover the pipe and the hose joint [B] with the vinyl bags [C] to keep it clean.

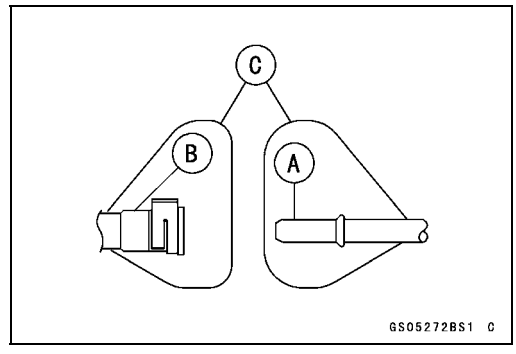

Fuel Tank Installation

- Note the above WARNING (see Fuel Tank Removal).
- Check that the damper [A] is in place on the relay box.

★If the dampers and trim are damaged or deteriorated, replace them.

- Run the hoses correctly (see Cable, Wire, and Hose Routing section in the Appendix chapter).

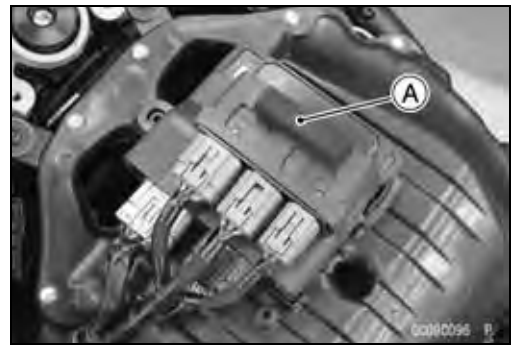

Fuel Tank

- Remove the vinyl bags on the pipe and fuel hose joint.
- Check the joint lock for deformation and wear.

★If the joint lock is deformed, replace the fuel hose with a new one.

- Check that there are no flaws, burrs, and adhesion of foreign materials on the pipe [A].
- Apply engine oil to the pipe.

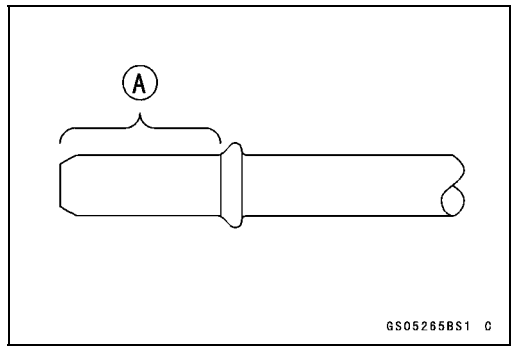

- Insert the fuel hose joint [A] straight onto the fuel outlet pipe until the hose joint clicks.
- Push [B] the joint lock [C] until the hose joint clicks.

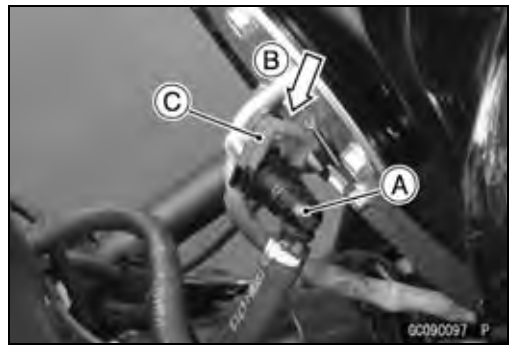

- Push and pull [A] the hose joint [B] back and forth more than two times, and make sure it is locked and does not come off.

⚠ WARNING

Leaking fuel can cause a fire or explosion resulting in serious burns. Make sure the hose joint is installed correctly on the delivery pipe.

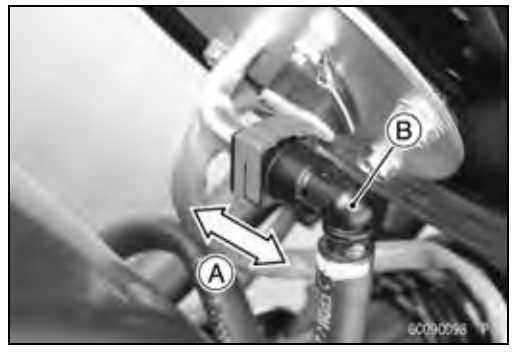

★If it comes off, reinstall the hose joint.

- Connect the fuel pump lead connector and the battery (–) terminal (see Battery Installation in the Electrical System chapter).
- Install the removed parts (see appropriate chapters).

Fuel Tank and Cap Inspection

- Open the tank cap.
- Visually inspect the gasket [A] on the tank cap for any damage.

★Replace the tank cap if gasket is damaged.

- Check to see if the water drain pipe [B] and fuel breather pipe [C] in the tank are not clogged. Check the tank cap breather also.

★If they are clogged, remove the tank and drain it, and then blow the breather free with compressed air.

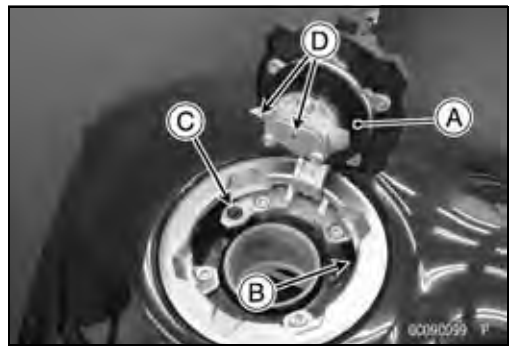

NOTICE

Do not apply compressed air to the air vent holes [D] in the tank cap. This could cause damage and clogging of the labyrinth in the cap.

Fuel Tank

Fuel Tank Cleaning

⚠ WARNING

Gasoline and low flash-point solvents can be flammable and/or explosive and cause severe burns. Clean the tank in a well-ventilated area, and take care that there are no sparks or flame anywhere near the working area. Do not use gasoline or low flash-point solvents to clean the tank.

- Remove:
  Fuel Tank (see Fuel Tank Removal)
  Fuel Pump (see Fuel Pump Removal)
- Pour some high flash-point solvent into the fuel tank and shake the tank to remove dirt and fuel deposits.
- Draw the solvent out of the fuel tank.
- Dry the tank with compressed air.
- Install:
  Fuel Pump (see Fuel Pump Installation)
  Fuel Tank (see Fuel Tank Installation)

Evaporative Emission Control System (Equipped Models)

The Evaporative Emission Control System routes fuel vapors from the fuel system into the running engine or stores the vapors in a canister when the engine is stopped. Although no adjustments are required, a thorough visual inspection must be made at the intervals specified by the Periodic Maintenance Chart.

Parts Removal/Installation

⚠ WARNING

Gasoline is extremely flammable and can be explosive under certain conditions. Turn the ignition switch off. Do not smoke. Make sure the area is well ventilated and free from any source of flame or sparks; this includes any appliance with a pilot light.

NOTICE

If gasoline, solvent, water or any other liquid enters the canister, the canister's vapor absorbing capacity is greatly reduced. If the canister does become contaminated, replace it with a new one.

- Connect the hoses according to the diagram of the system (see Cable, Wire, and Hose Routing section in the Appendix chapter). Make sure they do not get pinched or kinked.

Hose Inspection

- Refer to the Evaporative Emission Control System Inspection in the Periodic Maintenance chapter.

Purge Valve Inspection

- Refer to the Purge Valve Inspection.

Canister Inspection

- Refer to the Evaporative Emission Control System Inspection in the Periodic Maintenance chapter.

Cooling System

Table of Contents

Exploded View 4-2
Coolant Flow Chart 4-4
Specifications 4-6
Special Tools and Sealant 4-7
Coolant 4-8
Coolant Deterioration Inspection 4-8
Coolant Level Inspection 4-8
Coolant Draining 4-8
Coolant Filling 4-8
Pressure Testing 4-8
Cooling System Flushing 4-9
Coolant Reserve Tank Removal 4-9
Coolant Reserve Tank Installation 4-9
Water Pump 4-10
Water Pump Removal 4-10
Water Pump Installation 4-10
Water Pump Inspection 4-12
Water Pump Impeller Disassembly/Assembly 4-12
Water Pump Impeller Inspection 4-12
Water Pump Housing Disassembly 4-12
Water Pump Housing Assembly 4-13
Mechanical Seal Inspection 4-13
Radiator 4-14
Radiator and Radiator Fan Removal 4-14
Radiator and Radiator Fan Installation 4-15
Radiator Inspection 4-15
Radiator Cap Inspection 4-16
Radiator Filler Neck Inspection 4-16
Thermostat 4-17
Thermostat Removal 4-17
Thermostat Installation 4-17
Thermostat Inspection 4-18
Hose and Pipes 4-19
Hose Installation 4-19
Hose Inspection 4-19
Water Temperature Sensor 4-20
Water Temperature Sensor Removal/Installation 4-20
Water Temperature Sensor Inspection 4-20

Exploded View

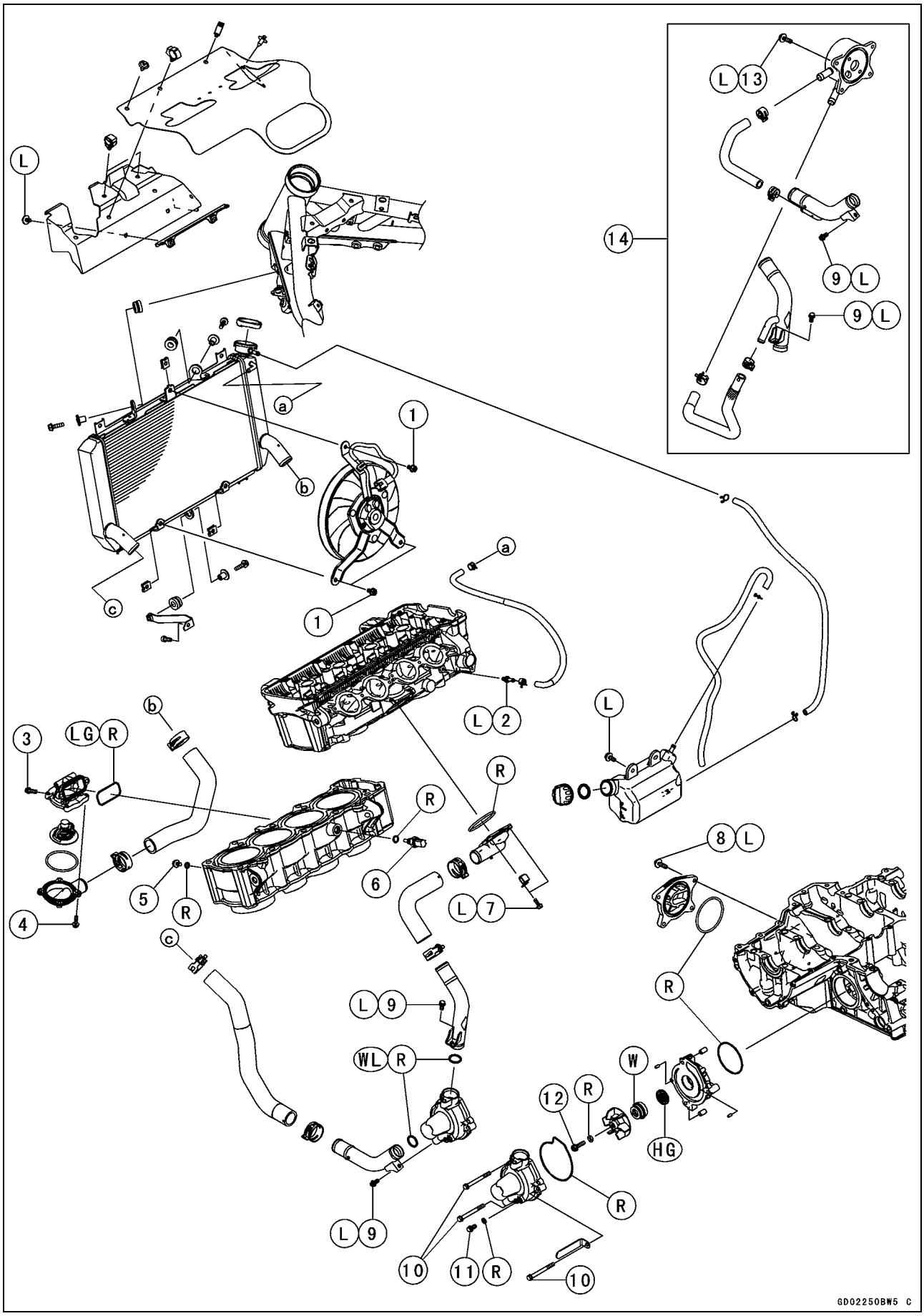

Exploded View

No.	Fastener	Torque			Remarks
		N·m	kgf·m	ft·lb	
1	Radiator Fan Mounting Bolts	8.4	0.86	74 in·lb	
2	Fitting Bolt	9.0	0.92	80 in·lb	L
3	Thermostat Housing Bolts	9.8	1.0	87 in·lb	
4	Thermostat Housing Cover Bolts	5.9	0.60	52 in·lb	
5	Coolant Drain Bolt (Cylinder)	9.8	1.0	87 in·lb	
6	Water Temperature Sensor	12	1.2	106 in·lb	
7	Water Hose Fitting Cover Bolts	5.9	0.60	52 in·lb	L
8	Oil Passage Cover Bolts	12	1.2	106 in·lb	L
9	Water Pipe Bolts	12	1.2	106 in·lb	L
10	Water Pump Cover Bolts	11	1.1	97 in·lb	
11	Coolant Drain Bolt	11	1.1	97 in·lb	
12	Water Pump Impeller Bolt	9.8	1.0	87 in·lb	
13	Oil Cooler Bolts	12	1.2	106 in·lb	L

14. MY Model
HG: Apply high-temperature grease.
L: Apply a non-permanent locking agent.
LG: Apply liquid gasket.
R: Replacement Parts
W: Apply water.
WL: Apply soap and water solution or rubber lubricant.

Coolant Flow Chart

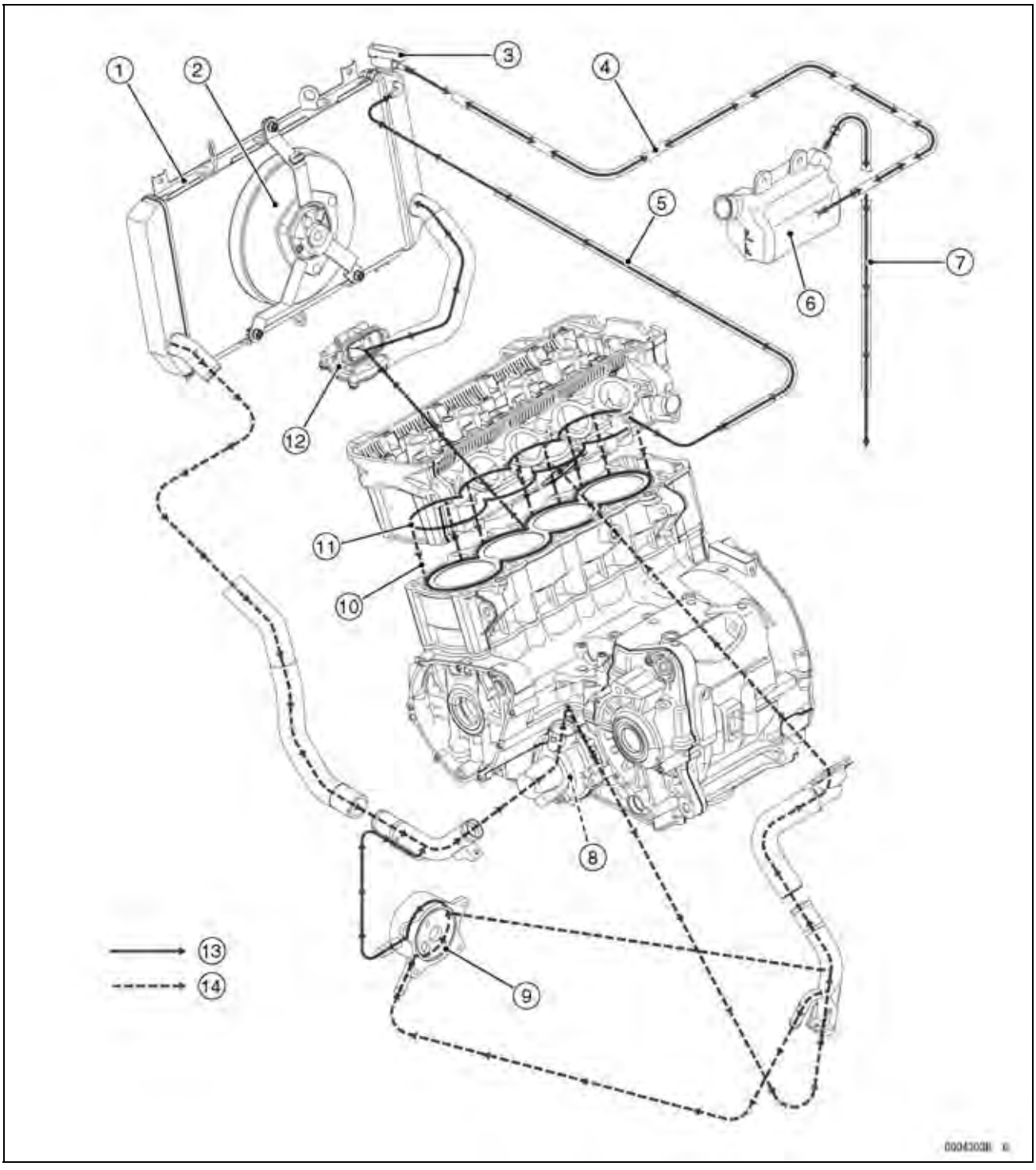

1. Radiator
2. Radiator Fan
3. Radiator Cap
4. Radiator Overflow Hose
5. Air Bleeder Hose
6. Reserve Tank
7. Reserve Tank Overflow Hose
8. Water Pump
9. Oil Cooler (MY Model)
10. Cylinder Jacket
11. Cylinder Head Jacket
12. Thermostat Housing
13. Hot Coolant
14. Cold Coolant

Coolant Flow Chart

Permanent type antifreeze is used as a coolant to protect the cooling system from rust and corrosion. When the engine starts, the water pump turns and the coolant circulates.

The thermostat is a wax pellet type which opens or closes with coolant temperature changes. The thermostat continuously changes its valve opening to keep the coolant temperature at the proper level. When coolant temperature is less than 55°C (131°F), the thermostat closes so that the coolant flow is restricted through the air bleeder hole, causing the engine to warm up more quickly. When coolant temperature is more than 58 ~ 62°C (136 ~ 144°F), the thermostat opens and the coolant flows.

When the coolant temperature goes up beyond 100°C (212°F), the radiator fan relay conducts to operate the radiator fan. The radiator fan draws air through the radiator core when there is not sufficient air flow such as at low speeds. This increases up the cooling action of the radiator. When the coolant temperature is below 97.5°C (208°F), the fan relay opens and the radiator fan stops.

In this way, this system controls the engine temperature within narrow limits where the engine operates most efficiently even if the engine load varies.

The system is pressurized by the radiator cap to suppress boiling and the resultant air bubbles which can cause engine overheating. As the engine warms up, the coolant in the radiator and the water jacket expands. The excess coolant flows through the radiator cap and hose to the reserve tank to be stored there temporarily. Conversely, as the engine cools down, the coolant in the radiator and the water jacket contracts, and the stored coolant flows back to the radiator from the reserve tank.

The radiator cap has two valves. One is a pressure valve which holds the pressure in the system when the engine is running. When the pressure exceeds 107.9 ~ 137.3 kPa (1.10 ~ 1.40 kgf/cm², 15.6 ~ 19.9 psi), the pressure valve opens and releases the pressure to the reserve tank. As soon as pressure escapes, the valve closes, and keeps the pressure at 107.9 ~ 137.3 kPa (1.10 ~ 1.40 kgf/cm², 15.6 ~ 19.9 psi). When the engine cools down, another small valve (vacuum valve) in the cap opens. As the coolant cools, the coolant contracts to form a vacuum in the system. The vacuum valve opens and allows the coolant from the reserve tank to enter the radiator.

4-6 COOLING SYSTEM

Specifications

Item	Standard
Coolant Provided when Shipping	
Type (Recommended)	Permanent type of antifreeze (soft water and ethylene glycol plus corrosion and rust inhibitor chemicals for aluminum engines and radiators)
Color	Green
Mixed Ratio	Soft water 50%, coolant 50%
Freezing Point	−35°C (−31°F)
Total Amount	2.4 L (2.5 US qt) (Reserve tank full level, including radiator and engine) (MY) 2.5 L (2.6 US qt) (Reserve tank full level, including radiator and engine)
Radiator Cap	
Relief Pressure	107.9 ~ 37.3 kPa (1.10 ~ 1.40 kgf/cm², 15.6 ~ 19.9 psi)
Thermostat	
Valve Opening Temperature	58 ~ 62°C (136 ~ 144°F)
Valve Full Opening Lift	8 mm (0.31 in.) or more @75°C (167°F)

Special Tools and Sealant

Bearing Driver Set:
57001-1129

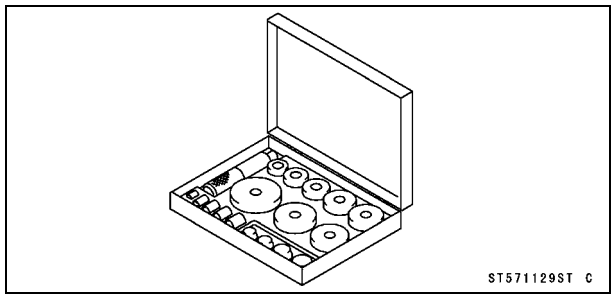

Liquid Gasket, TB1211F:
92104-0004

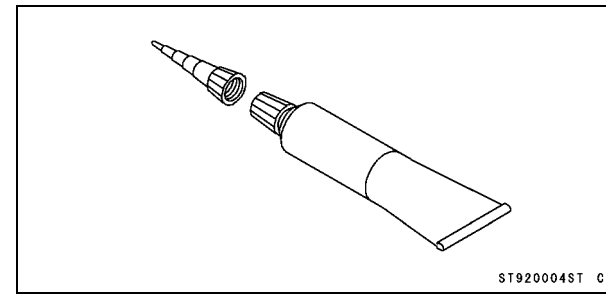

Oil Seal Driver ϕ37.5:
57001-1660

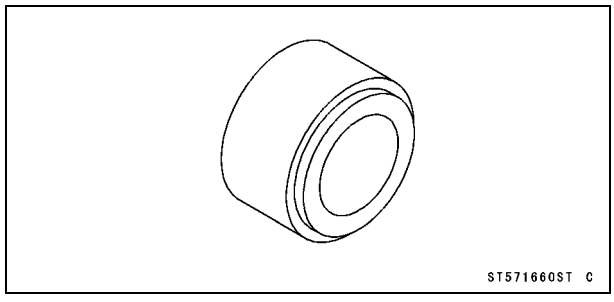

Coolant

Coolant Deterioration Inspection

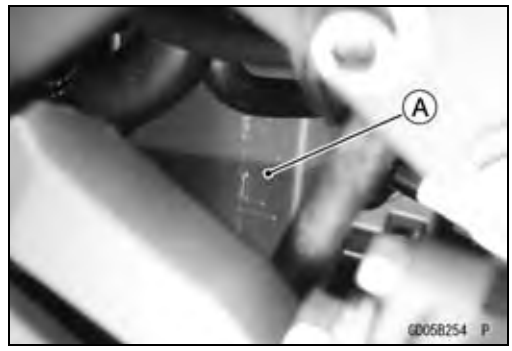

- Visually inspect the coolant in the reserve tank [A].

★If whitish cotton-like wafts are observed, aluminum parts in the cooling system are corroded. If the coolant is brown, iron or steel parts are rusting. In either case, flush the cooling system.

★If the coolant gives off an abnormal smell, check for a cooling system leak. It may be caused by exhaust gas leaking into the cooling system.

Coolant Level Inspection

- Refer to the Coolant Level Inspection in the Periodic Maintenance chapter.

Coolant Draining

- Refer to the Coolant Change in the Periodic Maintenance chapter.

Coolant Filling

- Refer to the Coolant Change in the Periodic Maintenance chapter.

Pressure Testing

- Remove the right inner cover (see Inner Cover Removal in the Frame chapter).
- Remove the radiator cap, and install a cooling system pressure tester [A] on the filler neck.

NOTE

○*Wet the cap sealing surfaces with water or coolant to prevent pressure leaks.*

- Build up pressure in the system carefully until the pressure reaches 137.3 kPa (1.40 kgf/cm², 19.9 psi).

NOTICE

During pressure testing, do not exceed the pressure for which the system is designed. The maximum pressure is 137.3 kPa (1.40 kgf/cm², 19.9 psi).

- Watch the gauge for at least 6 seconds.

★If the pressure holds steady, the system is all right.

★If the pressure drops and no external source is found, check for internal leaks. Droplets in the engine oil indicate internal leakage. Check the cylinder head gasket and the water pump.

- Remove the pressure tester, replenish the coolant, and install the radiator cap.
- Install the right inner cover (see Inner Cover Installation in the Frame chapter).

Coolant

Cooling System Flushing

Over a period of time, the cooling system accumulates rust, scale, and lime in the water jacket and radiator. When this accumulation is suspected or observed, flush the cooling system. If this accumulation is not removed, it will clog up the water passage and considerable reduce the efficiency of the cooling system.

- Drain the cooling system (see Coolant Change in the Periodic Maintenance chapter).
- Fill the cooling system with fresh water mixed with a flushing compound.

NOTICE
Do not use a flushing compound which is harmful to the aluminum engine and radiator. Carefully follow the instructions supplied by the manufacturer of the cleaning product.

- Warm up the engine, and run it at normal operating temperature for about ten minutes.
- Stop the engine, and drain the cooling system.
- Fill the system with fresh water.
- Warm up the engine and drain the system.
- Repeat the previous two steps once more.
- Fill the system with a permanent type coolant and bleed the air from the system (see Coolant Change in the Periodic Maintenance chapter).

Coolant Reserve Tank Removal

- Drain the coolant (see Coolant Change in the Periodic Maintenance chapter).
- Remove the throttle body assy (see Throttle Body Assy Removal in the Fuel System (DFI) chapter).
- Slide the clamp [A] and disconnect the radiator overflow hose [B].

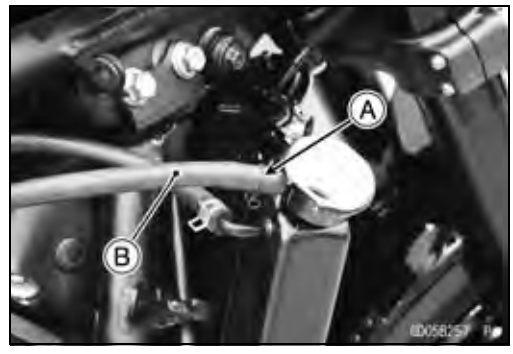

- Disconnect the water temperature sensor connector [A].
- Remove:
  Coolant Reserve Tank Bolt [B]
  Coolant Reserve Tank [C]

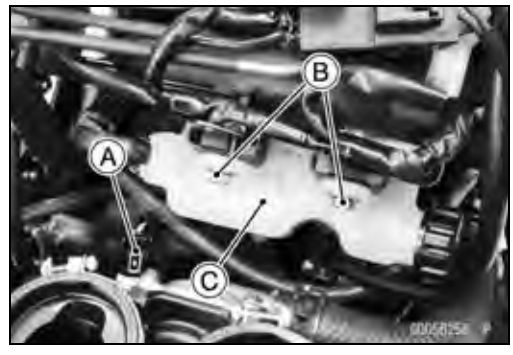

Coolant Reserve Tank Installation

- Apply a non-permanent locking agent to the threads of the coolant reserve tank bolt and tighten them.
- Install the removed parts (see appropriate chapters).

Water Pump

Water Pump Removal

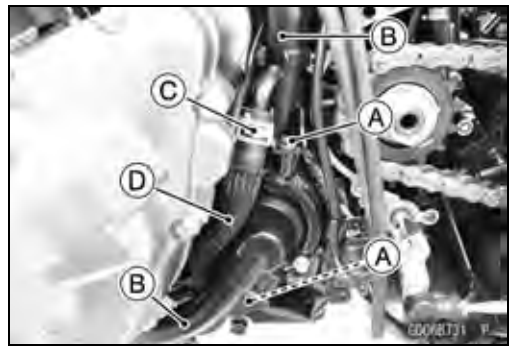

- Drain:
  Coolant (see Coolant Change in the Periodic Maintenance chapter)
  Engine Oil (see Engine Oil Change in the Periodic Maintenance chapter)
- Remove:
  Left Lower Fairing (see Lower Fairing Removal in the Frame chapter)
  Engine Sprocket Cover (see Engine Sprocket in the Final Drive chapter)
- Remove the water pipe bolts [A], and disconnect the water pipes [B].
- For MY model, slide the water hose clamp [C], and disconnect the water hose [D].

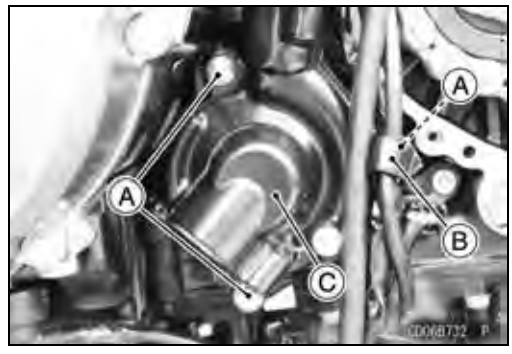

- Remove:
  Water Pump Cover Bolts [A]
  Clamp [B]
  Water Pump Cover [C]

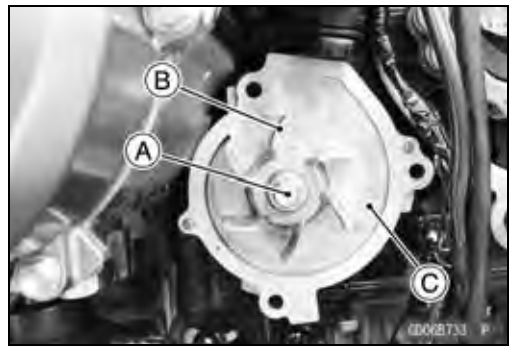

- Remove:
  Water Pump Impeller Bolt [A] and Washer
  Water Pump Impeller [B]
  Water Pump Housing [C]

Water Pump Installation

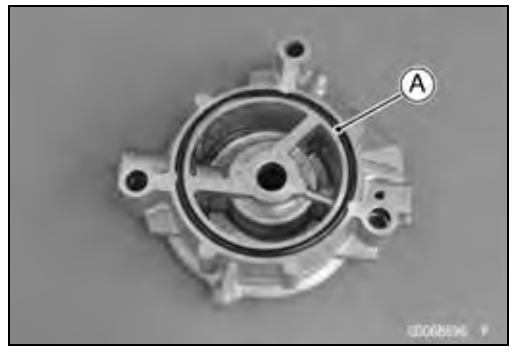

- Replace the O-ring [A] with a new one, and install it.

Water Pump

● Be sure to install the dowel pins [A].

● Install:
  Water Pump Housing [A]
  Water Pump Impeller [B]
● Replace the washer with a new one, and install it.
● Tighten:

Torque - Water Pump Impeller Bolt [C]: 9.8 N·m (1.0 kgf·m, 87 in·lb)

● Be sure to install the dowel pins [D].

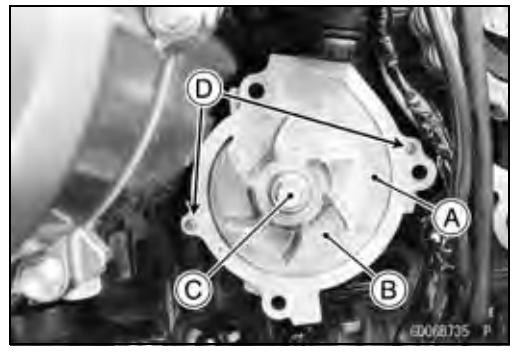

● Replace the O-ring [A] with a new one, and install it.

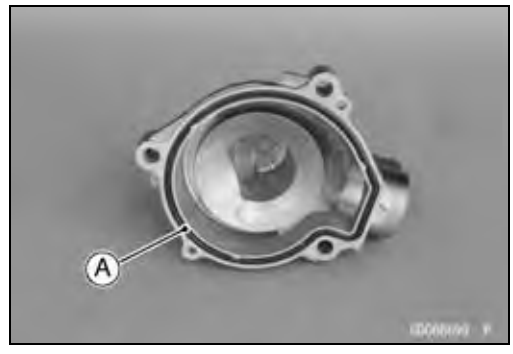

● Install:
  Water Pump Cover [A]
  Clamp [B]

○Install the clamp so that fit the stopper of the water pump cover.

● Tighten:

Torque - Water Pump Cover Bolts [C]: 11 N·m (1.1 kgf·m, 97 in·lb)

● Replace the O-rings [D] with new ones.
● Apply soap and water solution to the O-rings.

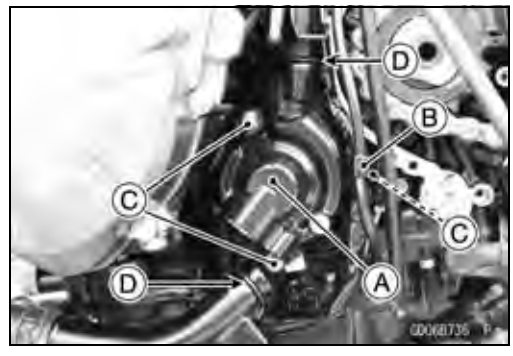

● Install the water pipes [A] to the water pump cover.
● Apply a non-permanent locking agent to the threads of the water pipe bolts [B], and tighten them.

Torque - Water Pipe Bolts: 12 N·m (1.2 kgf·m, 106 in·lb)

● For MY model, install the water hose [C] and clamp [D] (see Cable, Wire, and Hose Routing section in the Appendix chapter).
● Install the removed parts (see appropriate chapters).

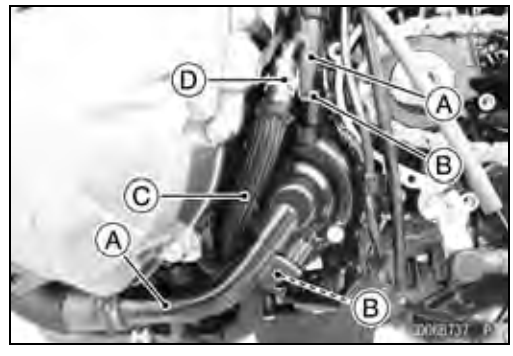

Water Pump

Water Pump Inspection

- Check the drainage outlet passage [A] at the bottom of the water pump housing for coolant leaks.
- If a coolant leak or ooze is found, start the engine and check if the coolant leaks continuously.

○When coolant does not continuously leak, it is normal.

★If the mechanical seal is damaged, the coolant continuously leaks through the drainage outlet passage. Replace the mechanical seal unit.

★If the oil seal is damaged, engine oil leaks through the drainage outlet passage. Replace the oil seal.

Water Pump Impeller Disassembly/Assembly

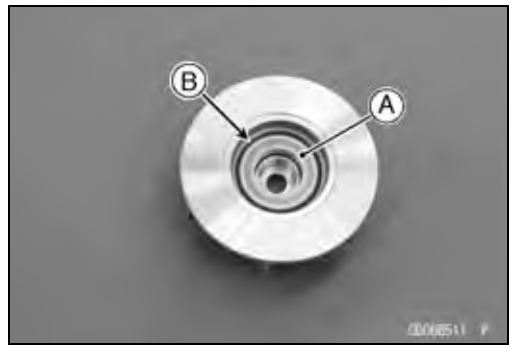

- Remove the water pump impeller (see Water Pump Removal).
- The sealing seat [A] and rubber seal [B] may be removed easily by hand.
- Apply water or coolant around the surfaces of the rubber seal and sealing seat.
- Install the rubber seal and sealing seat into the impeller by pressing them by hand until the seat stops at the bottom of the hole.
- Install the water pump impeller (see Water Pump Installation).

Water Pump Impeller Inspection

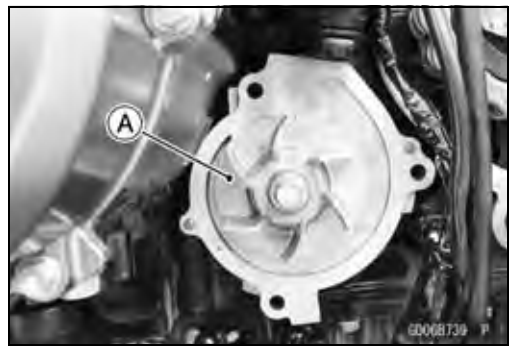

- Remove the water pump cover (see Water Pump Removal).
- Visually inspect the water pump impeller [A].

★If the surface is corroded or if the blades are damaged, replace the water pump impeller.

Water Pump Housing Disassembly

NOTICE
Do not damage the hole wall of the water pump housing.

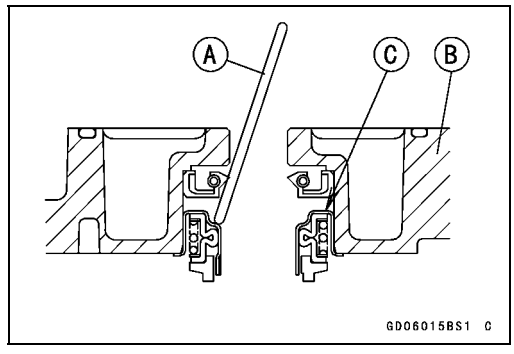

- Insert a bar [A] into the pump housing [B], and hammer evenly around the circumference of the mechanical seal bottom [C].

Water Pump

● Take the oil seal [A] out of the housing [B] with a hook [C].

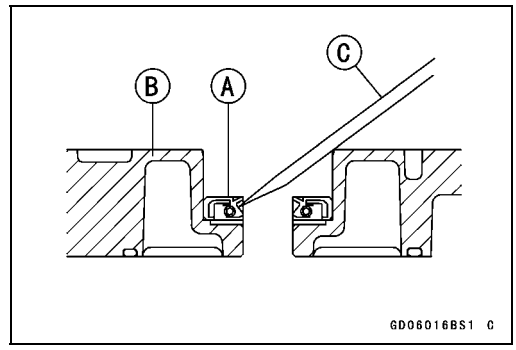

Water Pump Housing Assembly

NOTICE
Do not reuse the mechanical seal and oil seal.

● Apply high-temperature grease to the oil seal lips [A].
● Press the new oil seal into the housing with a bearing driver [B] until it stops at the bottom surface [C] of the housing.

Special Tool - Bearing Driver Set: 57001-1129

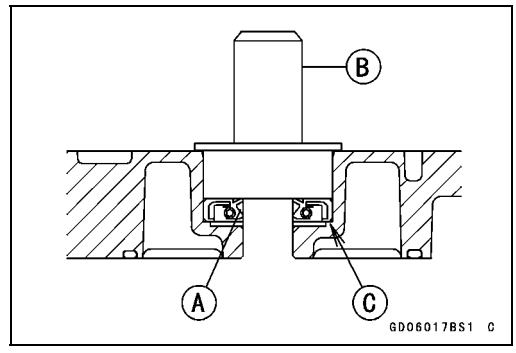

NOTICE
Be careful not to damage the sealing surface of the mechanical seal.

● Press the new mechanical seal into the housing with the oil seal driver [A] until its flange [B] touches the surface [C] of the housing.

Special Tool - Oil Seal Driver ϕ37.5: 57001-1660

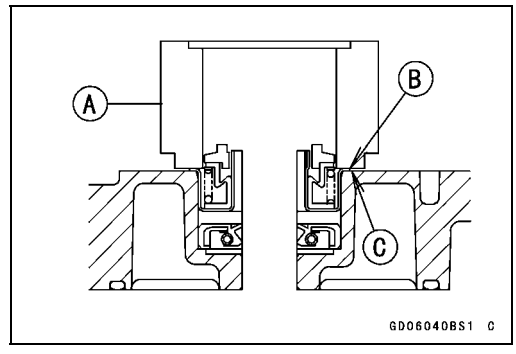

Mechanical Seal Inspection

● Remove the water pump impeller (see Water Pump Removal).
● Visually inspect the mechanical seal.
★ If any one of the parts is damaged, replace the mechanical seal as a unit.
Impeller Sealing Seat Surface [A]
Rubber Seal [B]
Mechanical Seal [C]

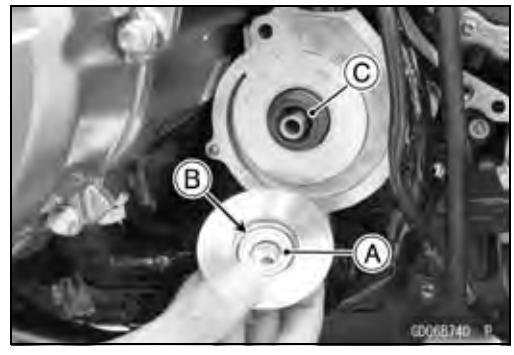

Radiator

Radiator and Radiator Fan Removal

- Drain the coolant (see Coolant change in the Periodic Maintenance chapter).
- Remove the air cleaner housing (see Air Cleaner Housing Removal in the Fuel System (DFI) chapter).
- Disconnect the radiator fan motor lead connector [A].

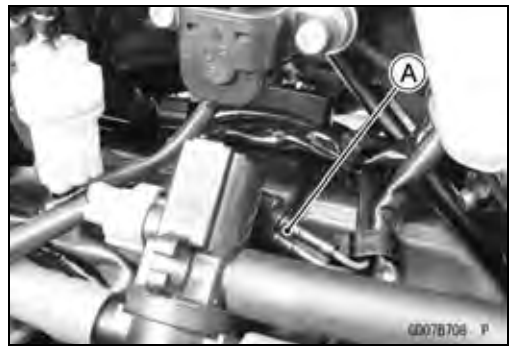

- Slide the clamp [A].
- Disconnect the water hose [B].

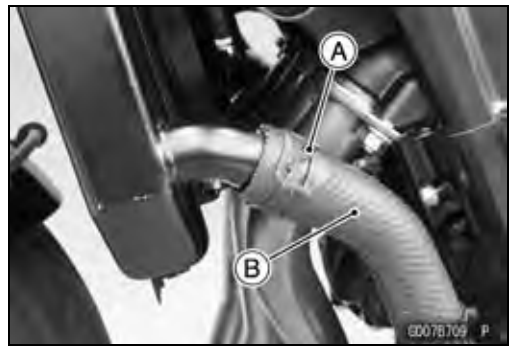

- Free the clutch cable [A] from the guide [B].
- Slide the clamps [C].
- Disconnect:
  Water Hose [D]
  Radiator Overflow Hose [E]
  Air Bleeder Hose [F]

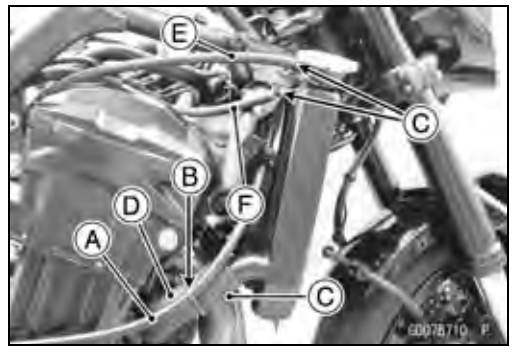

- Remove:
  Radiator Mounting Bolts [A]
  Radiator [B]

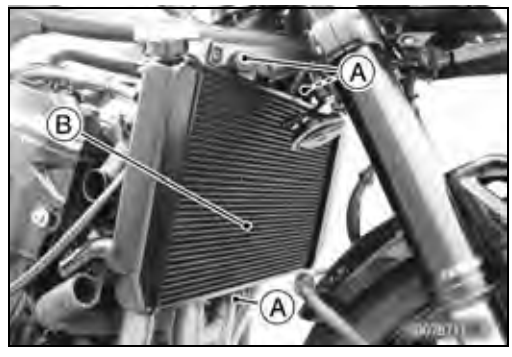

- Remove:
  Radiator Fan Mounting Bolts [A]
  Radiator Fan [B]

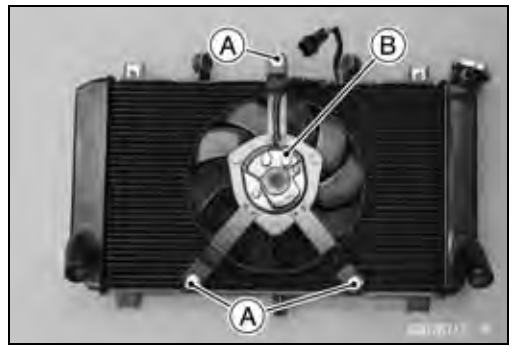

Radiator

Radiator and Radiator Fan Installation

- Installation is the reverse of removal.
- Install the radiator fan to the radiator.

Torque - Radiator Fan Mounting Bolts: 8.4 N·m (0.86 kgf·m, 74 in·lb)

- Install the rubber dampers [A] and radiator bracket collars [B] as shown.
  Larger [C]
  Smaller [D]

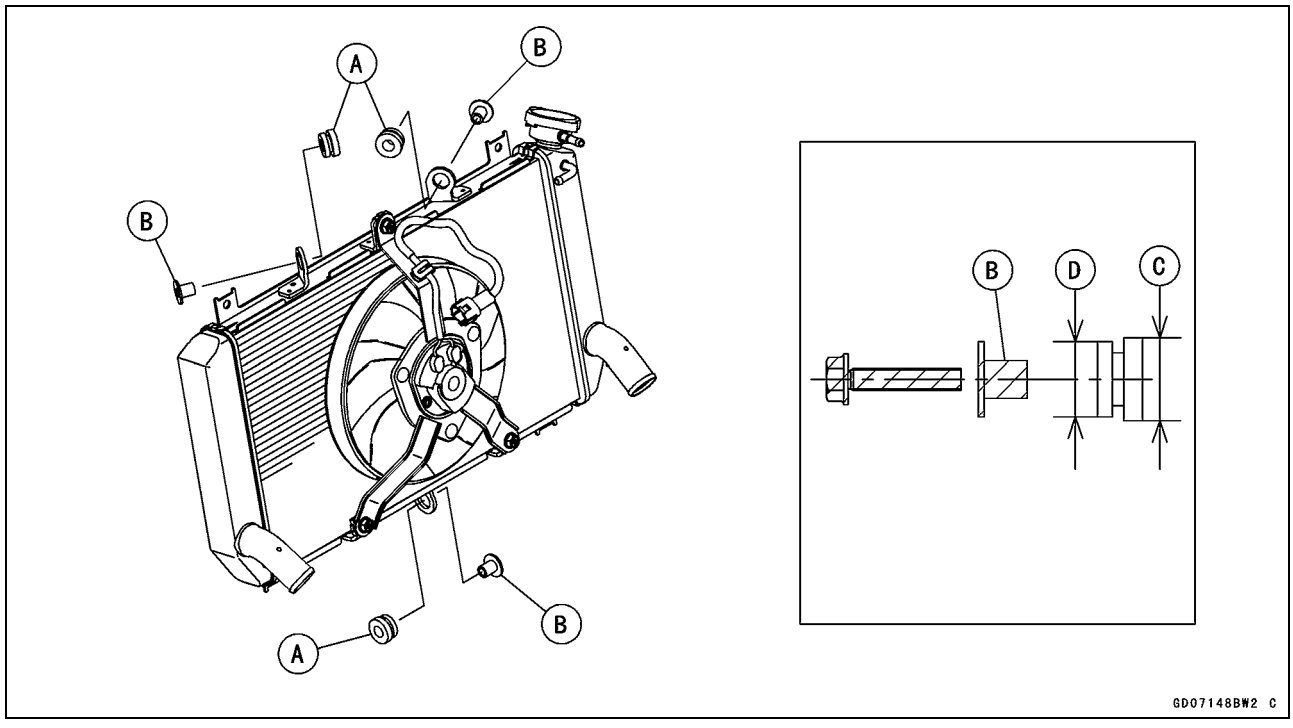

- Install the radiator.
- Run the radiator fan motor lead correctly (see Cable, Wire, and Hose Routing section in the Appendix chapter).
- Install the water hoses and clamps (see Cable, Wire, and Hose Routing section in the Appendix chapter).
- Install the removed parts (see appropriate chapters).

Radiator Inspection

- For special edition model, remove the radiator guard (see Radiator Guard Removal in the Frame chapter).
- Remove the radiator (see Radiator and Radiator Fan Removal).
- Check the radiator core.

★If there are obstructions to air flow, remove them.

★If the corrugated fins [A] are deformed, carefully straighten them.

★If the air passages of the radiator core are blocked more than 20% by unremovable obstructions or irreparably deformed fins, replace the radiator with a new one.

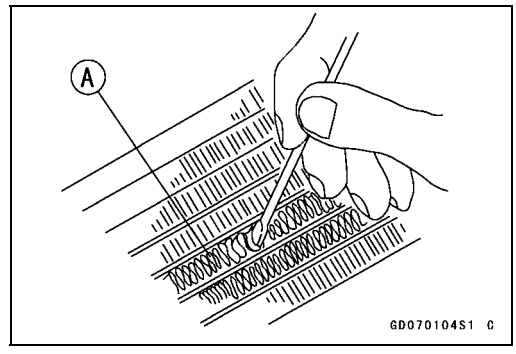

Radiator

NOTICE

When cleaning the radiator with steam cleaner, be careful of the following to prevent radiator damage:
Keep the steam gun [A] away more than 0.5 m (1.6 ft) [B] from the radiator core.
Hold the steam gun perpendicular [C] (not oblique [D]) to the core surface.
Run the steam gun, following the core fin direction.

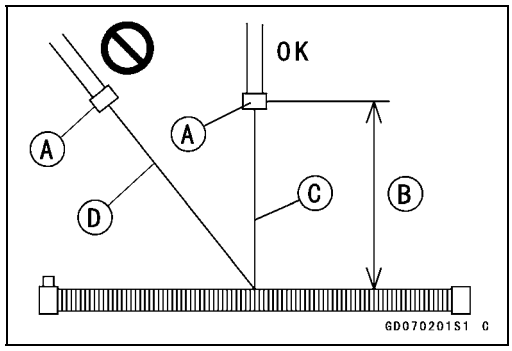

Radiator Cap Inspection

- Remove:
  Right Inner Cover (see Inner Cover Removal in the Frame chapter)
  Radiator Cap
- Check the condition of the bottom [A] and top [B] valve seals and valve spring [C].

★If any one of them shows visible damage, replace the cap with a new one.

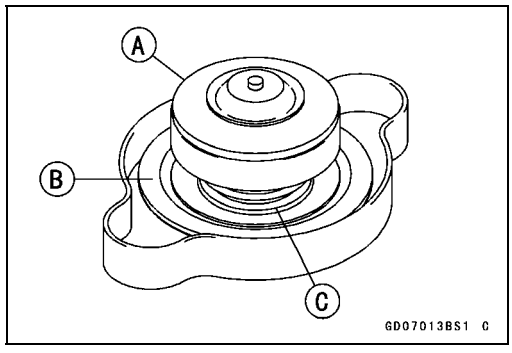

- Install the cap [A] on a cooling system pressure tester [B].

NOTE

○*Wet the cap sealing surfaces with water or coolant to prevent pressure leaks.*

- Watching the pressure gauge, pump the pressure tester to build up the pressure until the relief valve opens: the gauge needle flicks downward. Stop pumping and measure leak time at once. The relief valve must open within the specified range in the table below and the gauge hand must remain within the same range at least 6 seconds.

Radiator Cap Relief Pressure
Standard: 107.9 ~ 137.3 kPa (1.10 ~ 1.40 kgf/cm², 15.6 ~ 19.9 psi)

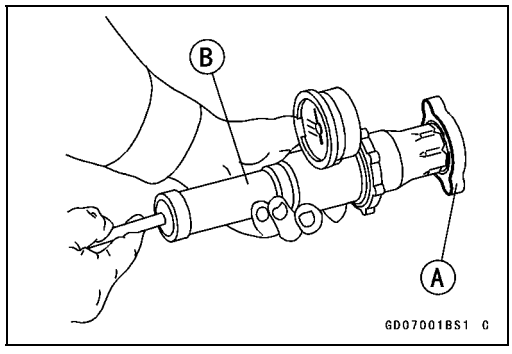

★If the cap can not hold the specified pressure or if it holds too much pressure, replace it with a new one.

Radiator Filler Neck Inspection

- Remove:
  Right Inner Cover (see Inner Cover Removal in the Frame chapter)
  Radiator Cap
- Check the radiator filler neck for signs of damage.
- Check the condition of the top and bottom sealing seats [A] in the filler neck. They must be smooth and clean for the radiator cap to function properly.

Thermostat

Thermostat Removal

- Drain the coolant (see Coolant Change in the Periodic Maintenance chapter).
- Remove:
  Exhaust Pipe (see Exhaust Pipe Removal in the Engine Top End chapter)
  Thermostat Housing Bolts [A]
  Thermostat Housing [B]

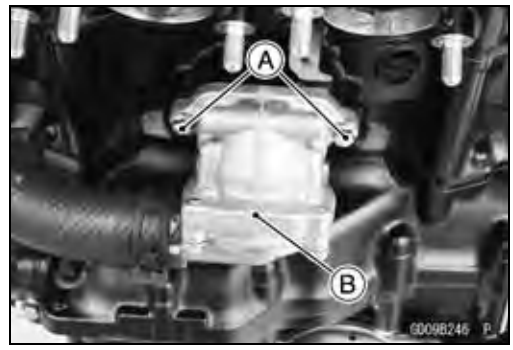

- Remove:
  Thermostat Housing Cover Bolts [A]
  Thermostat Housing Cover [B]
  Thermostat

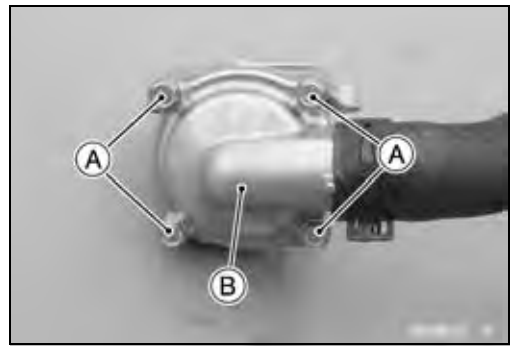

Thermostat Installation

- Replace the O-rings with a new ones.
- Apply liquid gasket to the O-ring [A] to prevent it from coming off.

  Sealant - Liquid Gasket, TB1211F: 92104-0004

- Do not apply grease to the O-ring [B].
- Install the thermostat [C] in the thermostat housing [D] so that the air bleeder hole [E] is on top.
- Install the thermostat housing cover [F] to the housing.

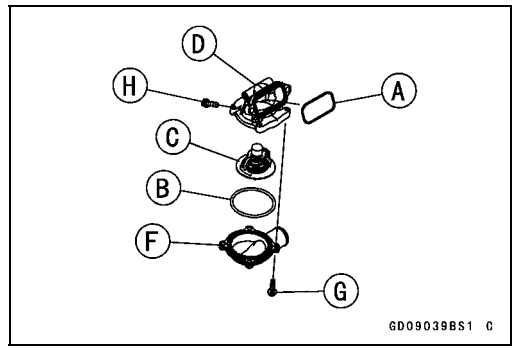

NOTE

○*Note that the thermostat does not move at the place when installing the thermostat housing cover.*

- Tighten:

  Torque - Thermostat Housing Cover Bolts [G]: 5.9 N·m (0.60 kgf·m, 52 in·lb)

- Install:
  Thermostat Housing
- Tighten:

  Torque - Thermostat Housing Bolts [H]: 9.8 N·m (1.0 kgf·m, 87 in·lb)

- Install the removed parts (see appropriate chapters).

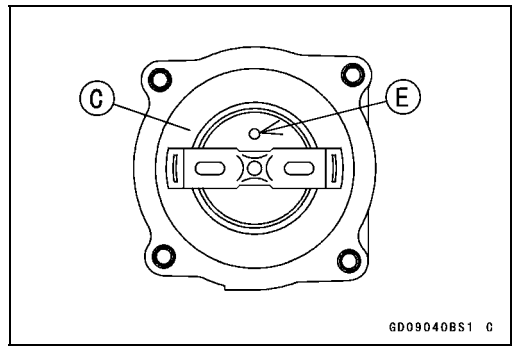

Thermostat

Thermostat Inspection

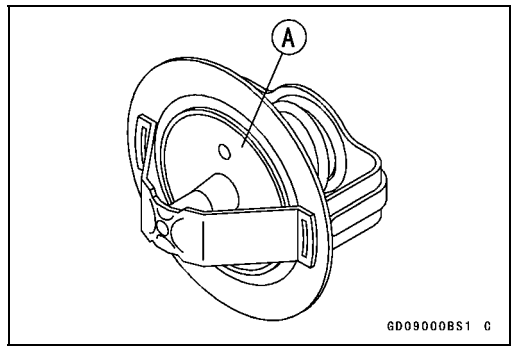

- Remove the thermostat (see Thermostat Removal).
- Inspect the thermostat valve [A] at room temperature.

★If the valve is open, replace the thermostat with a new one.

- To check valve opening temperature, suspend the thermostat [A] in a container of water and raise the temperature of the water.

○The thermostat must be completely submerged and must not touch the container sides or bottom. Suspend an accurate thermometer [B] in the water so that the heat sensitive portions [C] are located in almost the same depth. It must not touch the container, either.

★If the measurement is out of the specified range, replace the thermostat with a new one.

Thermostat Valve Opening Temperature
Standard: 58 ~ 62°C (136 ~ 144°F)

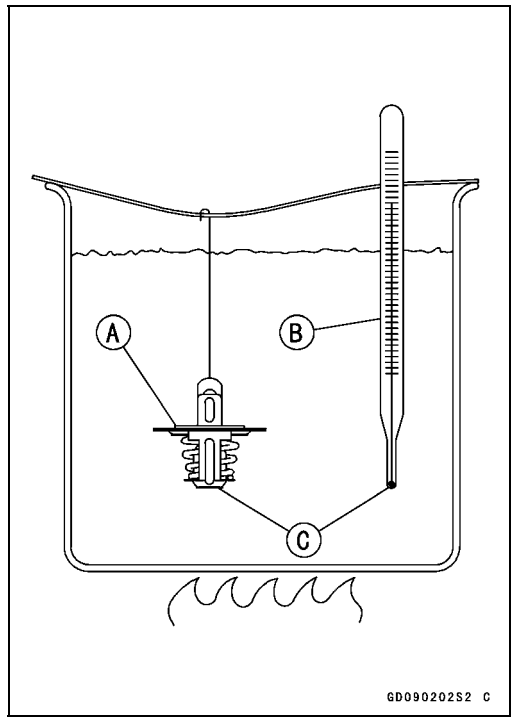

Hose and Pipes

Hose Installation

- Install the hoses and pipes, being careful to follow bending direction. Avoid sharp bending, kinking, flattening or twisting.
- Run the hoses (see Cable, Wire, and Hose Routing section in the Appendix chapter).
- Install the clamp [A] as near as possible to the hose end to clear the raised rib of the fitting. This will prevent the hoses from working loose.

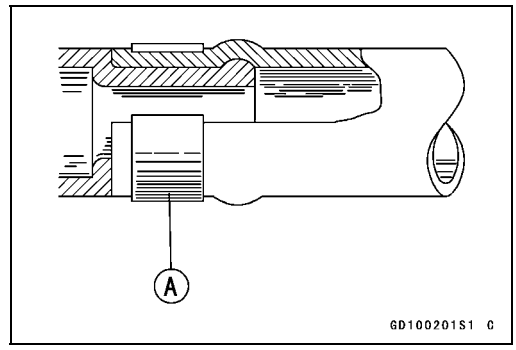

Hose Inspection

- Refer to the Water Hose and Pipe Inspection in the Periodic Maintenance chapter.

Water Temperature Sensor

NOTICE
The water temperature sensor should never be allowed to fall on a hard surface. Such a shock to the water temperature sensor can damage it.

Water Temperature Sensor Removal/Installation

- Refer to the Water Temperature Sensor Removal/Installation in the Fuel System (DFI) chapter.

Water Temperature Sensor Inspection

- Refer to the Water Temperature Sensor Inspection in the Electrical System chapter.

Engine Top End

Table of Contents

Exploded View 5-2
Exhaust System Identification 5-6
Specifications 5-8
Special Tools and Sealants 5-10
Clean Air System 5-12
  Air Suction Valve Removal 5-12
  Air Suction Valve Installation 5-12
  Air Suction Valve Inspection 5-13
  Air Switching Valve Removal 5-13
  Air Switching Valve Installation 5-13
  Air Switching Valve Operation Test 5-13
  Air Switching Valve Unit Test 5-13
  Clean Air System Hose Inspection 5-14
Cylinder Head Cover 5-15
  Cylinder Head Cover Removal 5-15
  Cylinder Head Cover Installation . 5-15
Camshaft Chain Tensioner 5-17
  Camshaft Chain Tensioner Removal 5-17
  Camshaft Chain Tensioner Installation 5-17
Camshaft, Camshaft Chain 5-18
  Camshaft Removal 5-18
  Camshaft Installation 5-19
  Camshaft, Camshaft Cap Wear Inspection 5-22
  Camshaft Runout Inspection 5-22
  Cam Wear Inspection 5-23
  Camshaft Chain Removal 5-23
  Camshaft Chain Installation 5-23
Cylinder Head 5-24
  Cylinder Compression Measurement 5-24
  Cylinder Head Removal 5-25
  Cylinder Head Installation 5-26
  Cylinder Head Warp Inspection ... 5-27
Valves 5-28
  Valve Clearance Inspection 5-28
  Valve Clearance Adjustment 5-28
  Valve Removal 5-28
  Valve Installation 5-28
  Valve Guide Removal 5-28
  Valve Guide Installation 5-29
  Valve-to-Guide Clearance Measurement (Wobble Method) 5-30
  Valve Seat Inspection 5-30
  Valve Seat Repair 5-31
Cylinder, Pistons 5-36
  Cylinder Removal 5-36
  Cylinder Installation 5-36
  Piston Removal 5-37
  Piston Installation 5-38
  Cylinder Wear Inspection 5-38
  Piston Wear Inspection 5-39
  Piston Ring, Piston Ring Groove Wear Inspection 5-39
  Piston Ring Groove Width Inspection 5-39
  Piston Ring Thickness Inspection 5-40
  Piston Ring End Gap Inspection .. 5-40
Throttle Body Assy Holder 5-41
  Throttle Body Assy Holder Removal 5-41
  Throttle Body Assy Holder Installation 5-41
Muffler 5-42
  Muffler Body Removal 5-42
  Muffler Body Installation 5-44
  Exhaust Pipe Removal 5-46
  Exhaust Pipe Installation 5-46

Exploded View

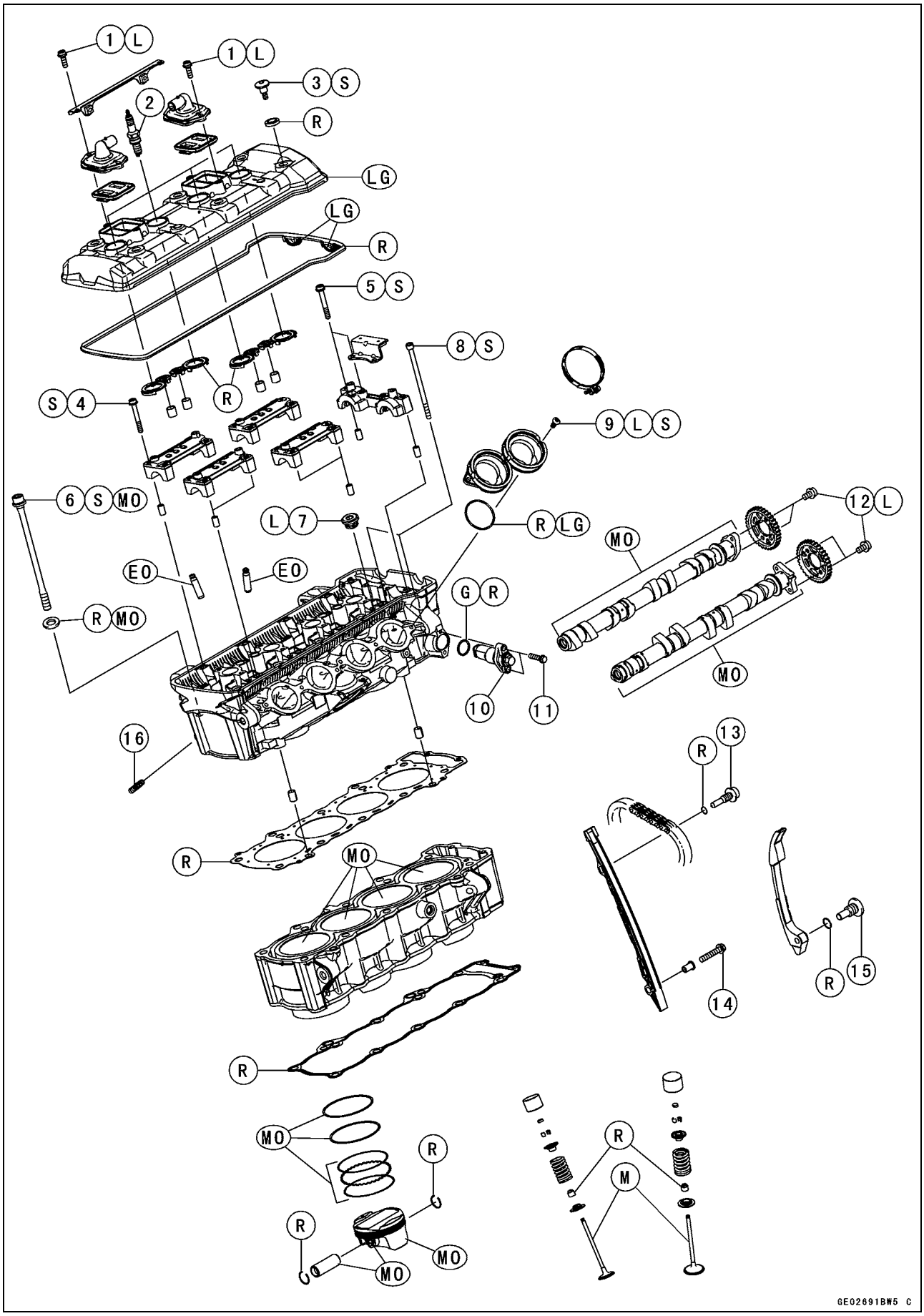

Exploded View

No.	Fastener	Torque			Remarks
		N·m	kgf·m	ft·lb	
1	Air Suction Valve Cover Bolts	9.8	1.0	87 in·lb	L
2	Spark Plugs	13	1.3	115 in·lb	
3	Cylinder Head Cover Bolts	10	1.0	89 in·lb	S
4	Camshaft Cap Bolts	12	1.2	106 in·lb	S
5	Upper Camshaft Chain Guide Bolts	12	1.2	106 in·lb	S
6	Cylinder Head Bolts (M10) (First)	30	3.1	22	MO, S
	Cylinder Head Bolts (M10) (Final)	54	5.5	40	MO, S
7	Cylinder Head Jacket Plugs	19.6	2.00	14.5	L
8	Cylinder Head Bolts (M6)	12	1.2	106 in·lb	S
9	Throttle Body Assy Holder Bolts	12	1.2	106 in·lb	L, S
10	Camshaft Chain Tensioner Cap Bolt	20	2.0	15	
11	Camshaft Chain Tensioner Mounting Bolts	11	1.1	97 in·lb	
12	Camshaft Sprocket Bolts	15	1.5	11	L
13	Front Camshaft Chain Guide Bolt (Upper)	25	2.5	18	
14	Front Camshaft Chain Guide Bolt (Lower)	12	1.2	106 in·lb	
15	Rear Camshaft Chain Guide Bolt	25	2.5	18	

16. Face the round end outward.
EO: Apply engine oil.
G: Apply grease.
L: Apply a non-permanent locking agent.
LG: Apply liquid gasket.
M: Apply molybdenum disulfide grease.
MO: Apply molybdenum disulfide oil solution.
(mixture of the engine oil and molybdenum disulfide grease in a weight ratio 10:1)
R: Replacement Parts
S: Follow the specified tightening sequence.

Exploded View

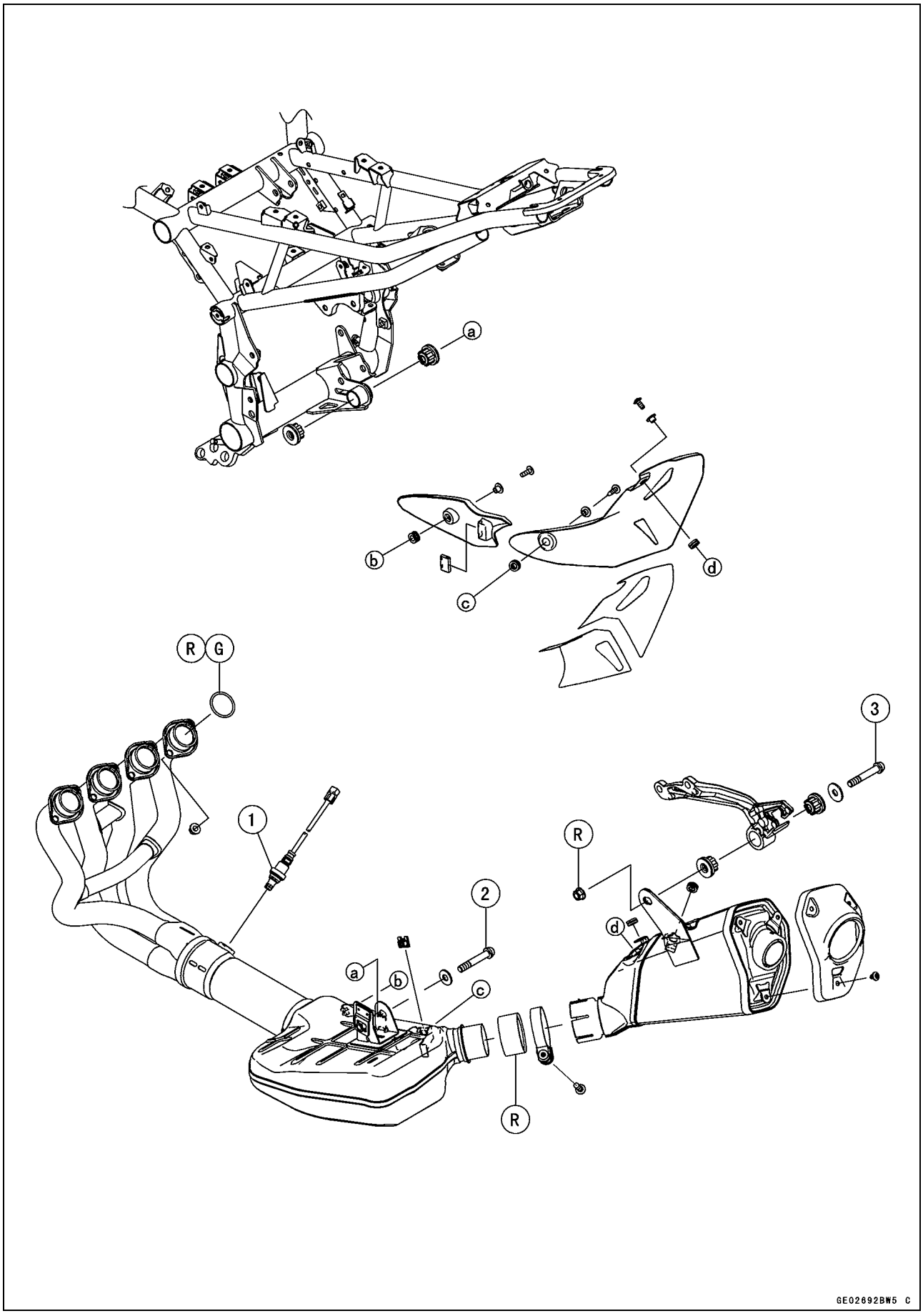

Exploded View

No.	Fastener	Torque			Remarks
		N·m	kgf·m	ft·lb	
1	Oxygen Sensor	44	4.5	32	
2	Premuffler Chamber Mounting Bolt	34	3.5	25	
3	Muffler Body Mounting Bolt	34	3.5	25	

G: Apply grease.
R: Replacement Parts

Exhaust System Identification

MANIFOLD	MUFFLER BODY	SPECIFICATION	MODEL
Honeycomb Type Catalyst with Oxygen Sensor P/No. 39178-0264 Mark: KHI M 187	Non-Catalyst P/No. 49069-0823 Mark: KHI K 666 EPA Noise Emission Control Information	WVTA (FULL) SEA-B1	ZR900BH ZR900BH
Honeycomb Type Catalyst with Oxygen Sensor P/No. 39178-0268 Mark: KHI M 188	Non-Catalyst P/No. 49069-0823 Mark: KHI K 666 EPA Noise Emission Control Information	US CAL CA	ZR900AH/BH ZR900AH/BH ZR900AH/BH
Honeycomb Type Catalyst with Oxygen Sensor P/No. 39178-0280 Mark: KHI M 189	Non-Catalyst P/No. 49069-0823 Mark: KHI K 666 EPA Noise Emission Control Information	AU ID MY TH	ZR900BH ZR900BH ZR900AH/BH ZR900BH
Honeycomb Type Catalyst with Oxygen Sensor P/No. 39178-302 Mark: KHI M 188	Non-Catalyst P/No. 49069-0824 Mark: KHI K 667	CN	ZR900BH

GE24599C F

Exhaust Pipe Mark Position [A]

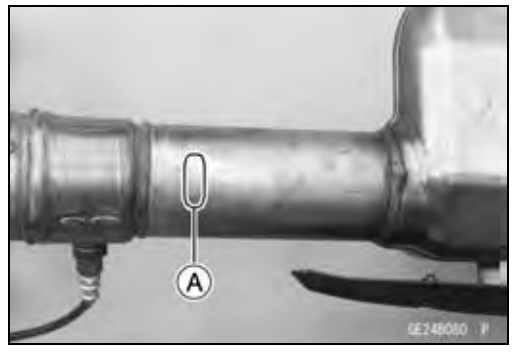

Left Muffler Body Mark Position [A]

Exhaust System Identification

Exhaust Pipe [A] with Hole [B] for Oxygen Sensor [C]

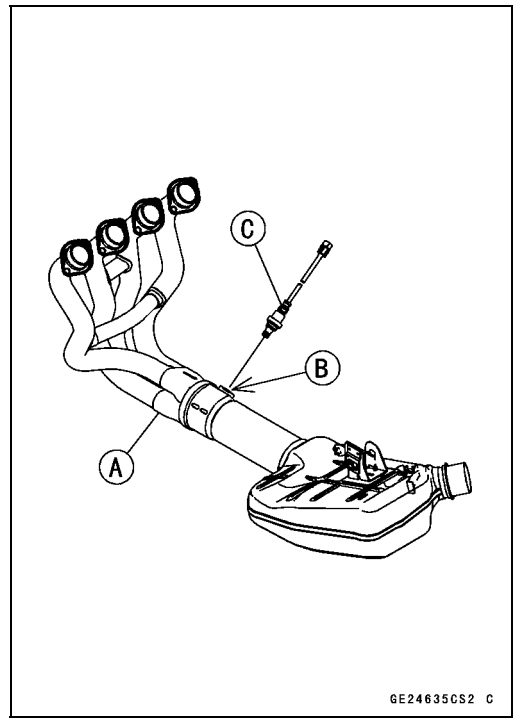

Honeycomb Type Catalyst Positions [A]

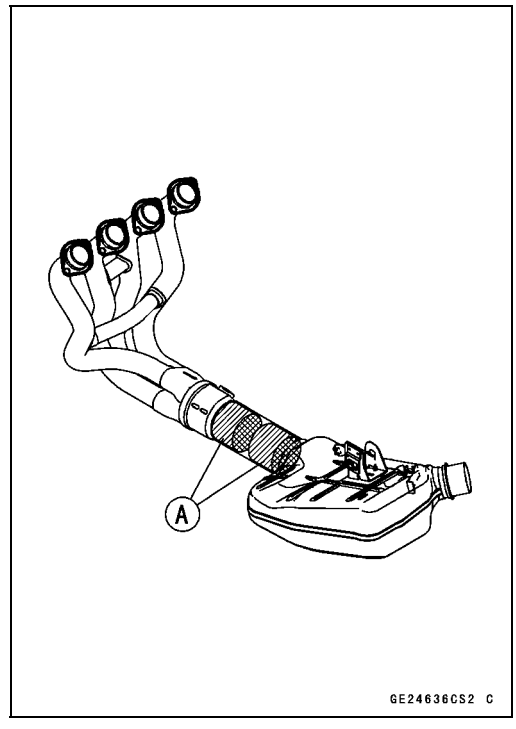

Specifications

Item	Standard	Service Limit
Camshafts		
Cam Height:		
Exhaust	33.743 ~ 33.857 mm (1.3285 ~ 1.3330 in.)	33.64 mm (1.324 in.)
Intake	34.443 ~ 34.557 mm (1.3560 ~ 1.3605 in.)	34.34 mm (1.352 in.)
Camshaft Journal/Cap Clearance	0.038 ~ 0.081 mm (0.0015 ~ 0.0032 in.)	0.17 mm (0.0067 in.)
Camshaft Journal Diameter	23.940 ~ 23.962 mm (0.94252 ~ 0.94338 in.)	23.91 mm (0.9413 in.)
Camshaft Bearing Inside Diameter	24.000 ~ 24.021 mm (0.94488 ~ 0.94571 in.)	24.08 mm (0.9480 in.)
Camshaft Runout	TIR 0.02 mm (0.0008 in.) or less	TIR 0.1 mm (0.004 in.)
Cylinder Head		
Cylinder Compression	(Usable Range) 1 120 ~ 1 698 kPa (11.42 ~ 17.32 kgf/cm², 162.4 ~ 246.2 psi) @580 r/min (rpm)	– – –
Cylinder Head Warp	– – –	0.05 mm (0.002 in.)
Valves		
Valve Clearance:		
Exhaust	0.22 ~ 0.31 mm (0.0087 ~ 0.0122 in.)	– – –
Intake	0.13 ~ 0.22 mm (0.0051 ~ 0.0087 in.)	– – –
Valve Head Thickness:		
Exhaust	0.8 mm (0.031 in.)	0.7 mm (0.028 in.)
Intake	0.5 mm (0.020 in.)	0.3 mm (0.012 in.)
Valve Stem Bend	TIR 0.01 mm (0.0004 in.) or less	TIR 0.05 mm (0.002 in.)
Valve Stem Diameter:		
Exhaust	4.455 ~ 4.470 mm (0.1754 ~ 0.1760 in.)	4.44 mm (0.175 in.)
Intake	4.475 ~ 4.490 mm (0.1762 ~ 0.1768 in.)	4.46 mm (0.176 in.)
Valve Guide Inside Diameter:		
Exhaust	4.500 ~ 4.512 mm (0.1772 ~ 0.1776 in.)	4.58 mm (0.180 in.)
Intake	4.500 ~ 4.512 mm (0.1772 ~ 0.1776 in.)	4.58 mm (0.180 in.)
Valve/Valve Guide Clearance (Wobble Method):		
Exhaust	0.08 ~ 0.16 mm (0.0031 ~ 0.0063 in.)	0.35 mm (0.014 in.)
Intake	0.03 ~ 0.10 mm (0.0012 ~ 0.0039 in.)	0.30 mm (0.012 in.)
Valve Seat Cutting Angle	32°, 45°, 60°	– – –
Valve Seating Surface:		
Outside Diameter:		
Exhaust	23.4 ~ 23.6 mm (0.921 ~ 0.929 in.)	– – –
Intake	28.3 ~ 28.5 mm (1.11 ~ 1.12 in.)	– – –
Width:		
Exhaust	0.8 ~ 1.2 mm (0.031 ~ 0.047 in.)	– – –
Intake	0.5 ~ 1.0 mm (0.020 ~ 0.039 in.)	– – –
Valve Spring Free Length:		
Exhaust	36.5 mm (1.437 in.)	35.3 mm (1.390 in.)
Intake	36.6 mm (1.441 in.)	35.2 mm (1.386 in.)

Specifications

Item	Standard	Service Limit
Cylinder, Pistons		
Cylinder Inside Diameter	73.394 ~ 73.406 mm (2.8895 ~ 2.8900 in.)	73.49 mm (2.893 in.)
Piston Diameter	73.374 ~ 73.384 mm (2.8887 ~ 2.8891 in.)	73.22 mm (2.883 in.)
Piston/Cylinder Clearance	0.010 ~ 0.032 mm (0.0004 ~ 0.0013 in.)	– – –
Piston Ring/Groove Clearance:		
Top	0.035 ~ 0.070 mm (0.00138 ~ 0.00276 in.)	0.17 mm (0.0067 in.)
Second	0.020 ~ 0.055 mm (0.00079 ~ 0.00217 in.)	0.16 mm (0.0063 in.)
Piston Ring Groove Width:		
Top	0.82 ~ 0.84 mm (0.0323 ~ 0.0331 in.)	0.92 mm (0.0362 in.)
Second	0.81 ~ 0.83 mm (0.0319 ~ 0.0327 in.)	0.91 mm (0.0358 in.)
Piston Ring Thickness:		
Top	0.770 ~ 0.785 mm (0.0303 ~ 0.0309 in.)	0.70 mm (0.028 in.)
Second	0.775 ~ 0.790 mm (0.0305 ~ 0.0311 in.)	0.71 mm (0.028 in.)
Piston Ring End Gap:		
Top	0.15 ~ 0.25 mm (0.0059 ~ 0.0098 in.)	0.6 mm (0.02 in.)
Second	0.30 ~ 0.40 mm (0.0118 ~ 0.0157 in.)	0.7 mm (0.03 in.)

Special Tools and Sealants

Compression Gauge, 20 kgf/cm²:
57001-221

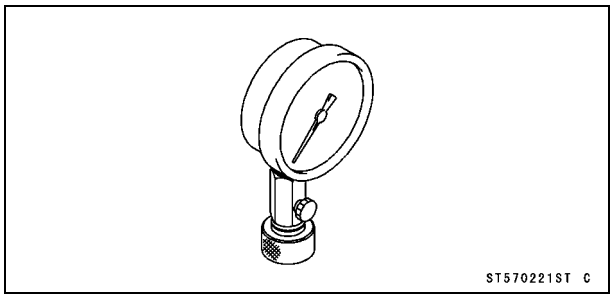

Valve Spring Compressor Assembly:
57001-241

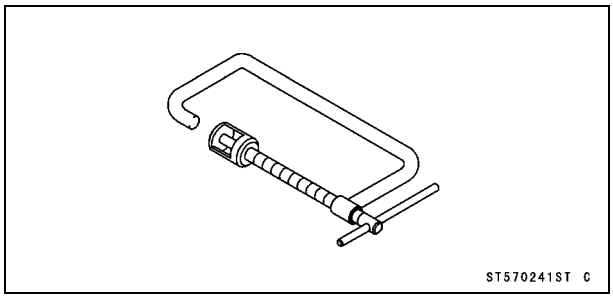

Piston Pin Puller Assembly:
57001-910

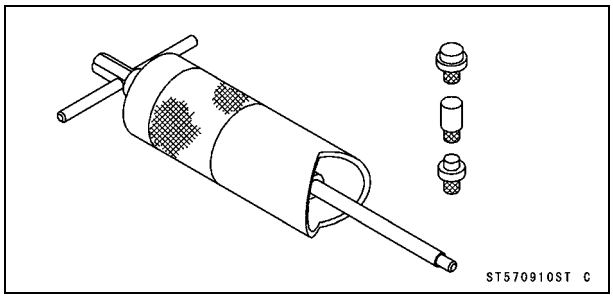

Valve Seat Cutter, 45° - ϕ27.5:
57001-1114

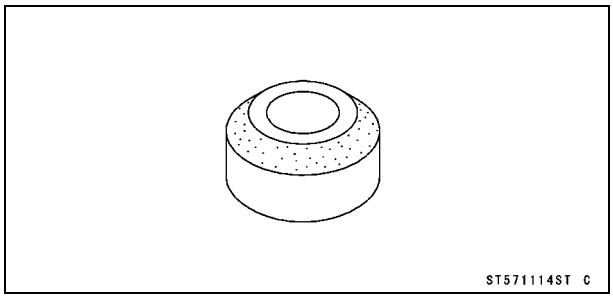

Valve Seat Cutter, 45° - ϕ32:
57001-1115

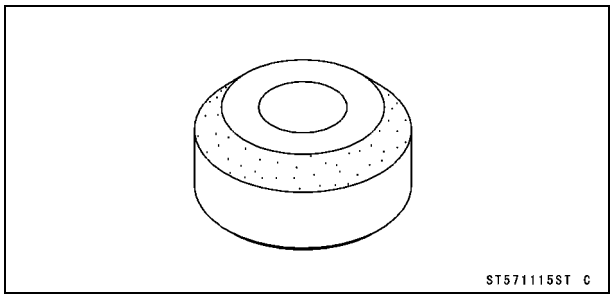

Valve Seat Cutter, 32° - ϕ25:
57001-1118

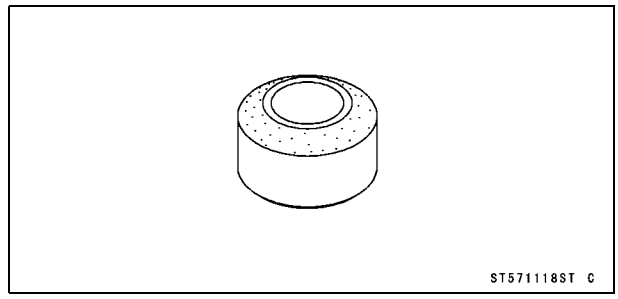

Valve Seat Cutter, 32° - ϕ28:
57001-1119

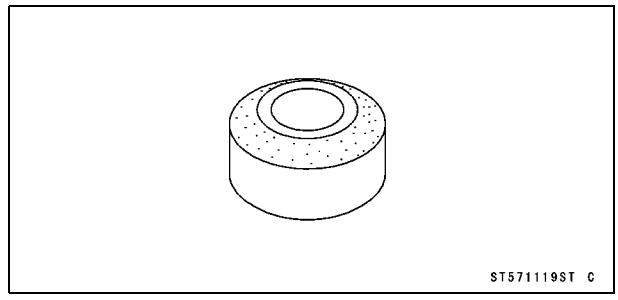

Valve Seat Cutter Holder Bar:
57001-1128

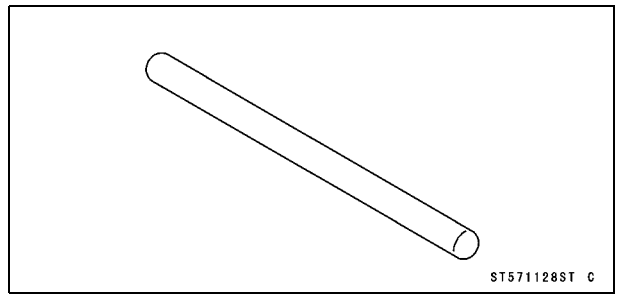

Valve Spring Compressor Adapter, ϕ22:
57001-1202

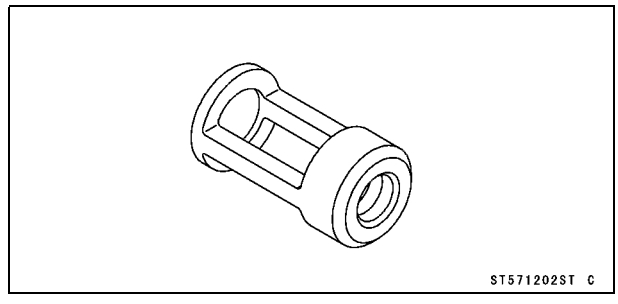

Valve Seat Cutter Holder, ϕ4.5:
57001-1330

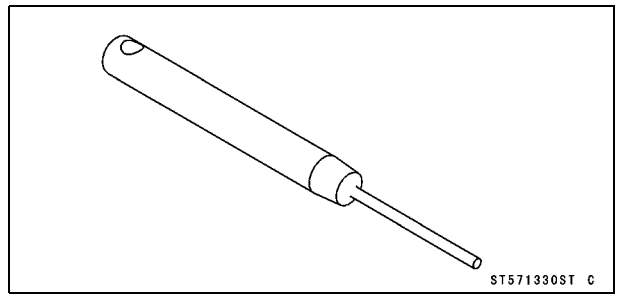

Special Tools and Sealants

Valve Guide Arbor, ϕ4.5:
57001-1331

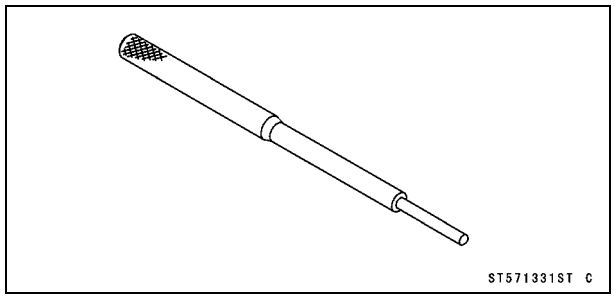

Valve Guide Driver:
57001-1564

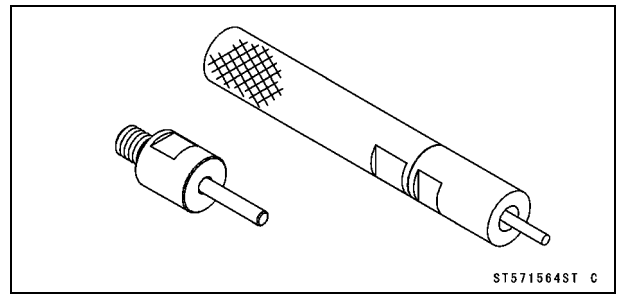

Valve Guide Reamer, ϕ4.5:
57001-1333

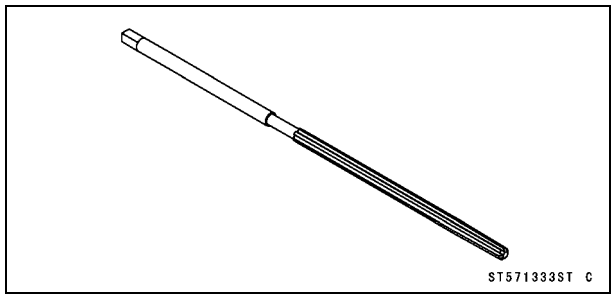

Valve Spring Compressor Adapter, ϕ24:
57001-1586

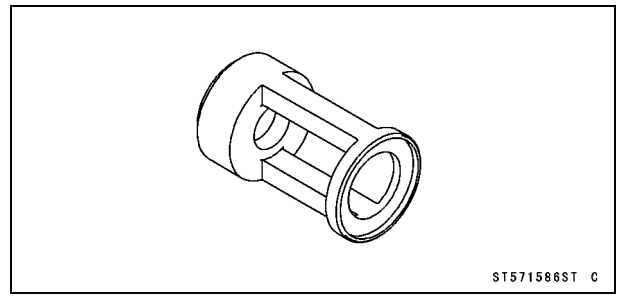

Valve Seat Cutter, 60° - ϕ33:
57001-1334

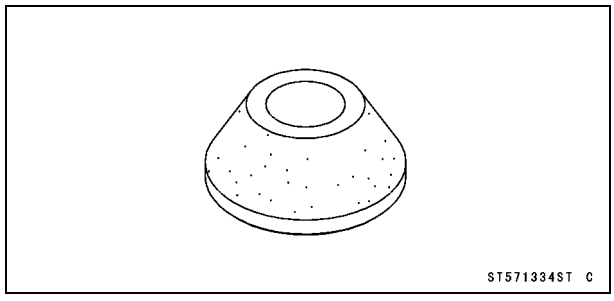

Washer:
57001-1612

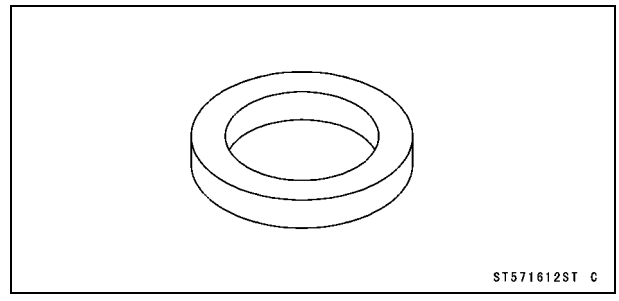

Valve Seat Cutter, 60° - ϕ27:
57001-1409

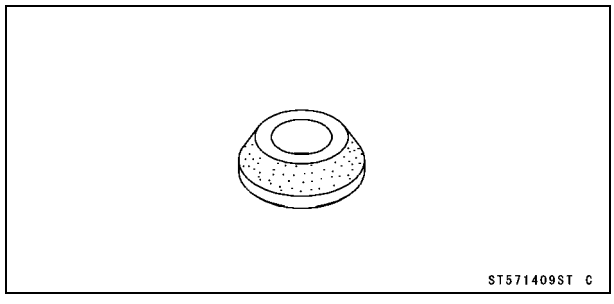

Liquid Gasket, TB1211F:
92104-0004

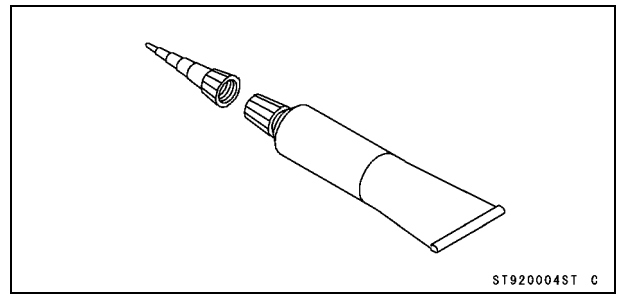

Compression Gauge Adapter, M10 × 1.0:
57001-1486

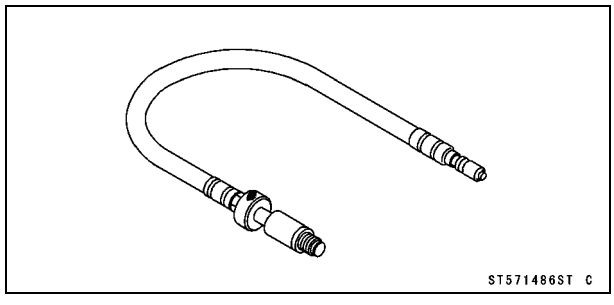

Liquid Gasket, TB1216B:
92104-1064

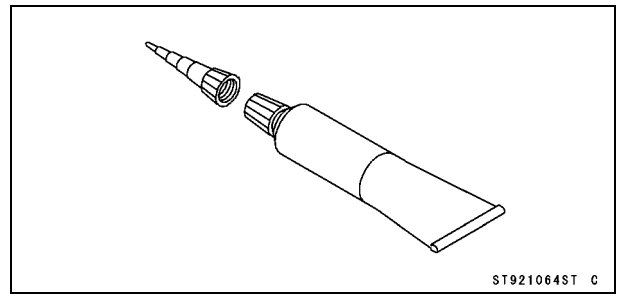

Clean Air System

Air Suction Valve Removal

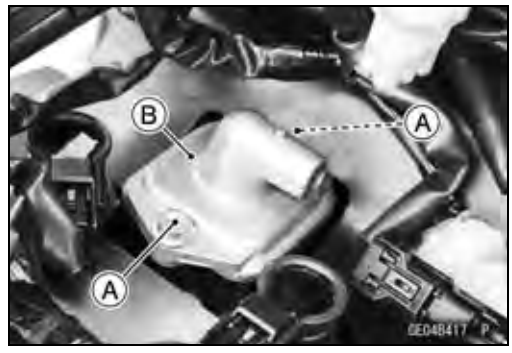

- Remove:
  Air Switching Valve (see Air Switching Valve Removal)
  Air Suction Valve Cover Bolts [A] (Both Sides)
  Bracket
  Air Suction Valve Cover [B] (Both Sides)

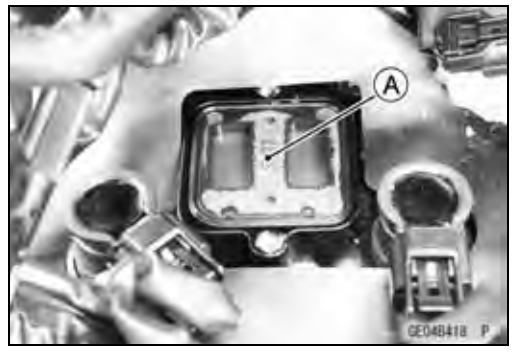

- Remove the air suction valve [A] on both sides.

Air Suction Valve Installation

- Install the air suction valve so that opening [A] of the reed faces the front and downward.

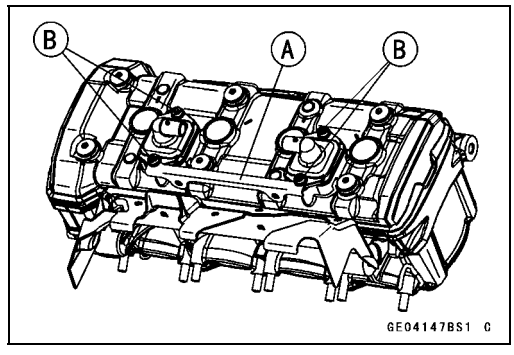

- Install the bracket [A] as shown.
- Install the air suction valve covers.
- Apply a non-permanent locking agent to the threads of the air suction valve cover bolts [B], and tighten them.

  Torque - Air Suction Valve Cover Bolts: 9.8 N·m (1.0 kgf·m, 87 in·lb)

- Install the removed parts (see appropriate chapters).

Clean Air System

Air Suction Valve Inspection

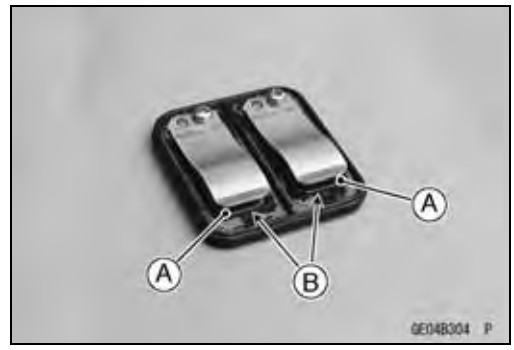

- Remove the air suction valve (see Air Suction Valve Removal).
- Visually inspect the reeds [A] for cracks, folds, warps, heat damage or other damage.

★If there is any doubt as to the condition of the reeds, replace the air suction valve as an assembly.

- Check the reed contact areas [B] of the valve holder for grooves, scratches, any signs of separation from the holder or heat damage.

★If there is any doubt as to the condition of the reed contact areas, replace the air suction valve as an assembly.

★If any carbon or other foreign particles have accumulated between the reed and the reed contact area, wash the valve assembly clean with a high flash-point solvent.

NOTICE
Do not scrape off the deposits with a scraper as this could damage the rubber, requiring replacement of the suction valve assembly.

Air Switching Valve Removal

NOTICE
Never drop the air switching valve especially on a hard surface. Such a shock to the air switching valve can damaged it.

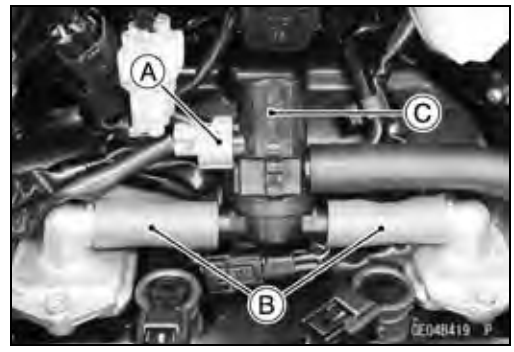

- Remove the air cleaner housing (see Air Cleaner Housing Removal in the Fuel System (DFI) chapter).
- Disconnect the connector [A].
- Disconnect the hoses [B] from the air suction valve covers, and remove the air switching valve [C].

Air Switching Valve Installation

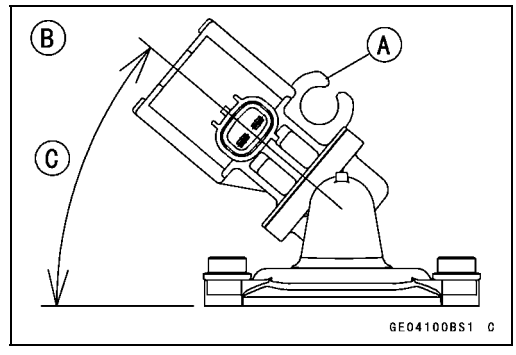

- Install the air switching valve [A] with hoses as shown.
  Left Side View [B]
  About 40° [C]
- Install the removed parts (see appropriate chapters).

Air Switching Valve Operation Test

- Refer to the Air Suction System Damage Inspection in the Periodic Maintenance chapter.

Air Switching Valve Unit Test

- Refer to the Air Switching Valve Unit Test in the Electrical System chapter.

Clean Air System

Clean Air System Hose Inspection

- Be certain that all the hoses are routed without being flattened or kinked, and are connected correctly to the air cleaner housing, air switching valve and air suction valve covers.

★If they are not, correct them. Replace them if they are damaged.

Cylinder Head Cover

Cylinder Head Cover Removal

- Remove:
  Air Suction Valves (see Air Suction Valve Removal)
  Stick Coils (see Stick Coil Removal in the Electrical System chapter)
  Radiator (see Radiator and Radiator Fan Removal in the Cooling System)
- Remove the clamp [A] from heat insulation plate.

- Remove:
  Quick Rivet [A] (Both Side)
  Heat Insulation Rubber Plate [B]

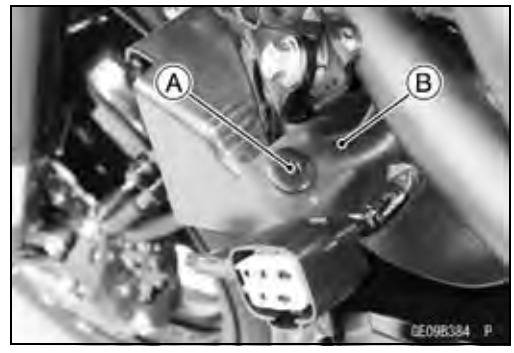

- Remove:
  Cylinder Head Cover Bolts [A] with Washers
  Cylinder Head Cover [B]
  Heat Insulation Plate
  Gasket

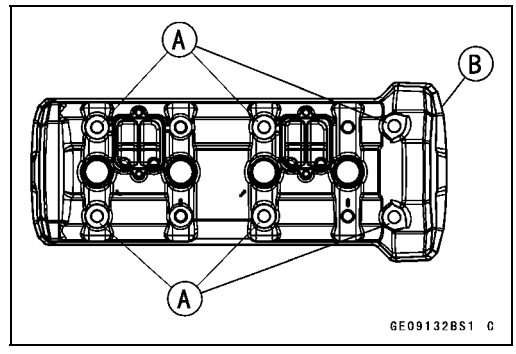

Cylinder Head Cover Installation

- Replace the plug hole gaskets [A] with new ones.
- Install:
  Dowel Pins [B]
  Plug Hole Gaskets

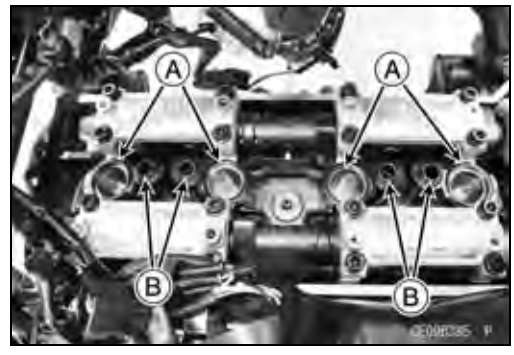

- Using a high flash-point solvent, clean off any oil or dirt that may be on the liquid gasket coating area. Dry them with a clean cloth.
- Apply liquid gasket [A] to the cylinder head as shown.

Sealant - Liquid Gasket, TB1216B: 92104-1064

NOTE

○*Make the application finish within 20 minutes with the liquid gasket (TB1216B) to the mating surface of the cylinder head cover is applied.*

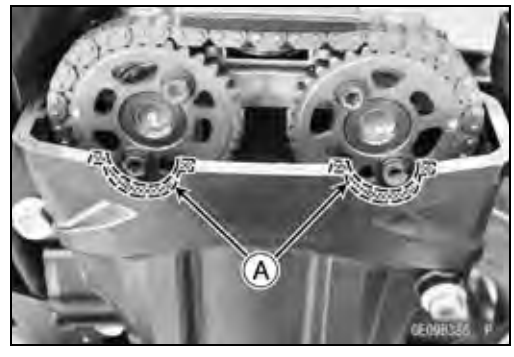

Cylinder Head Cover

- Replace the head cover gasket with a new one.
- Using a high flash-point solvent, clean off any oil or dirt that may be on the liquid gasket coating area. Dry them with a clean cloth.
- Apply liquid gasket around the groove [A] on the sealing surface to retain the gasket in the cylinder head cover.

  Sealant - Liquid Gasket, TB1211F: 92104-0004
- Install the gasket to the cylinder head cover.

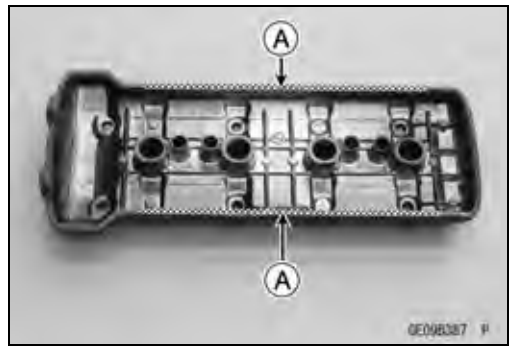

- Replace the washers with new ones.
- Install the washers with the metal side [A] faces upward.

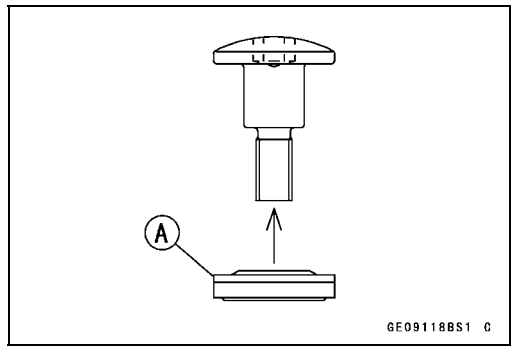

- Tighten the cylinder head cover bolts following the specified tightening sequence [1 ~ 6].

  Torque - Cylinder Head Cover Bolts: 10 N·m (1.0 kgf·m, 89 in·lb)

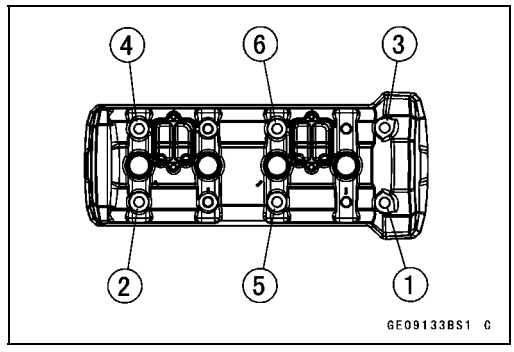

- Install the removed parts (see appropriate chapters).

Camshaft Chain Tensioner

Camshaft Chain Tensioner Removal

NOTICE
This is a non-return type camshaft chain tensioner. The push rod does not return to its original position once it moves out to take up camshaft chain slack. Observe all the rules listed below. **When removing the tensioner, do not take out the mounting bolts only halfway. Retightening the mounting bolts from this position could damage the tensioner and the camshaft chain. Once the bolts are loosened, the tensioner must be removed and reset as described in "Camshaft Chain Tensioner Installation."** **Do not turn over the crankshaft while the tensioner is removed. This could upset the camshaft chain timing, and damage the valves.**

- Remove:
  Camshaft Chain Tensioner Cap Bolt [A]
  Washer [B]
  Spring [C]
  Rod [D]
  Camshaft Chain Tensioner Mounting Bolts [E]
  Camshaft Chain Tensioner Body [F]

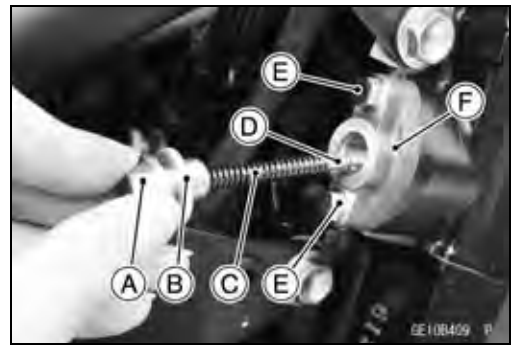

Camshaft Chain Tensioner Installation

- Replace the O-ring [A] with a new one.
- Apply grease to the new O-ring.
- Release the stopper [B] and push the push rod [C] into the interior of the tensioner body [D].
- Install the tensioner body so that the stopper faces upward.

- Tighten:

  Torque - Camshaft Chain Tensioner Mounting Bolts [A]: 11 N·m (1.1 kgf·m, 97 in·lb)

- Install the rod, spring and washer.
- Tighten:

  Torque - Camshaft Chain Tensioner Cap Bolt [B]: 20 N·m (2.0 kgf·m, 15 ft·lb)

- Turn the crankshaft 2 turns clockwise to allow the tensioner to expand and recheck the camshaft chain timing.

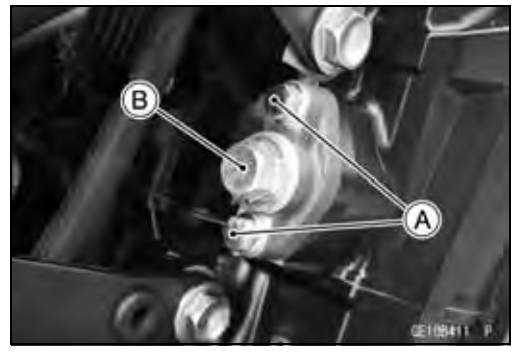

Camshaft, Camshaft Chain

Camshaft Removal

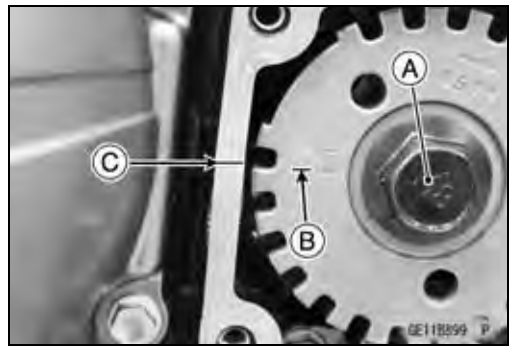

- Remove:
  Cylinder Head Cover (see Cylinder Head Cover Removal)
  Crankshaft Sensor Cover (see Crankshaft Sensor Removal in the Electrical System chapter)
- Using a wrench on the timing rotor bolt [A], turn the crankshaft clockwise until the line [B] (TDC mark for #1, 4 pistons) on the timing rotor is aligned with the mating surface [C] of the crankcase.
- Remove the camshaft chain tensioner (see Camshaft Chain Tensioner Removal).
- Loosen the upper camshaft chain guide bolts and camshaft cap bolts gradually and evenly as shown sequence [1 ~ 20], and remove them.
- Remove:
  Upper Camshaft Chain Guide [A]
  Camshaft Caps [B]
  Camshafts [C]
- Stuff a clean cloth into the chain tunnel to keep any parts from dropping into the crankcase.

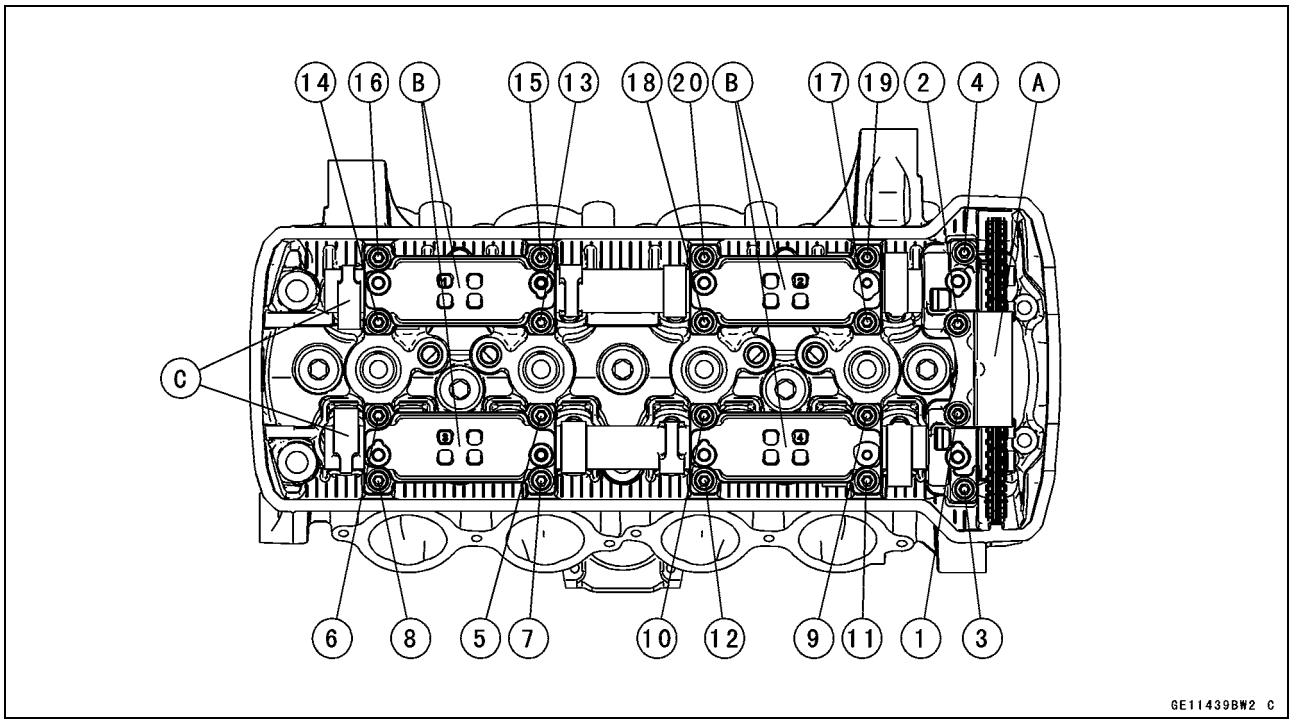

- Remove:
  Camshaft Sprocket Mounting Bolts [A]
  Camshaft Sprockets [B]

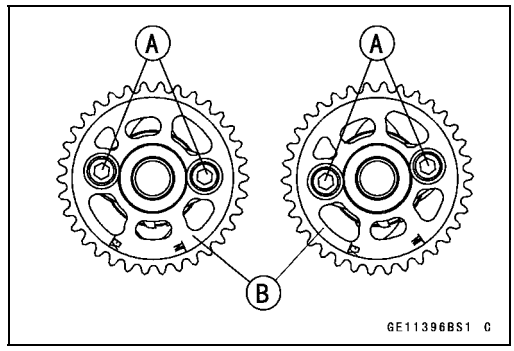

NOTICE

The crankshaft may be turned while the camshafts are removed. Always pull the chain taut while turning the crankshaft. This avoids kinking the chain on the lower (crankshaft) sprocket. A kinked chain could damage both the chain and the sprocket.

Camshaft, Camshaft Chain

Camshaft Installation

● Be sure to install the following parts.
Plug Hole Gaskets [A]
Dowel Pins [B]

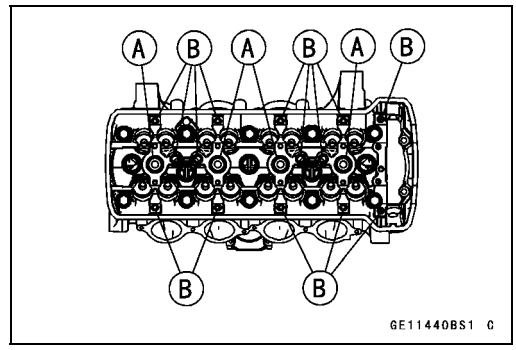

NOTE

○*The exhaust camshaft has a 8943 EX mark [A] and the intake camshaft has a 8943 IN mark [B]. Be careful not to mix up these shafts.*

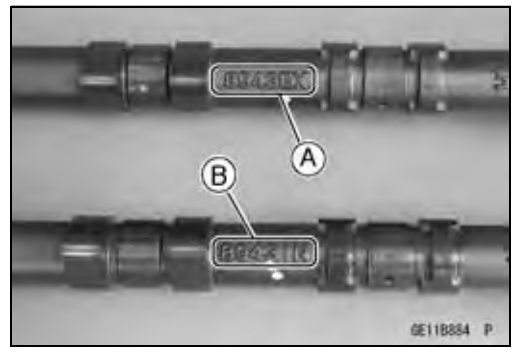

● Install the camshaft sprockets so that position the timing marks [A] outside.
○The intake camshaft sprocket and exhaust camshaft sprocket are identical.
● Apply a non-permanent locking agent to the threads of the camshaft sprocket bolts and tighten them.

Torque - Camshaft Sprocket Bolts: 15 N·m (1.5 kgf·m, 11 ft·lb)

● Apply molybdenum disulfide oil solution to all cam parts and journals.

● Using a wrench on the timing rotor bolt [A], turn the crankshaft clockwise until the line [B] (TDC mark for #1,4 pistons) on the timing rotor is aligned with the mating surface [C] of the crankcase.

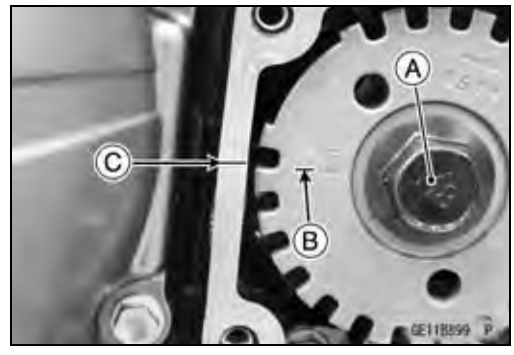

NOTICE

The crankshaft may be turned while the camshafts are removed. Always pull the chain taut while turning the crankshaft. This avoids kinking the chain on the lower (crankshaft) sprocket. A kinked chain could damage both the chain and the sprocket.

Camshaft, Camshaft Chain

- Pull the tension side (exhaust side) [A] of the chain taut to install the chain.
- Engage the camshaft chain with the sprockets so that timing marks on the sprockets are positioned as shown.

○The timing marks must be aligned with the cylinder head upper surface [B].

EX mark [C]
IN mark [D]
#1 pin [E]
#2 pin [F]
#30 pin [G]
#31 pin [H]

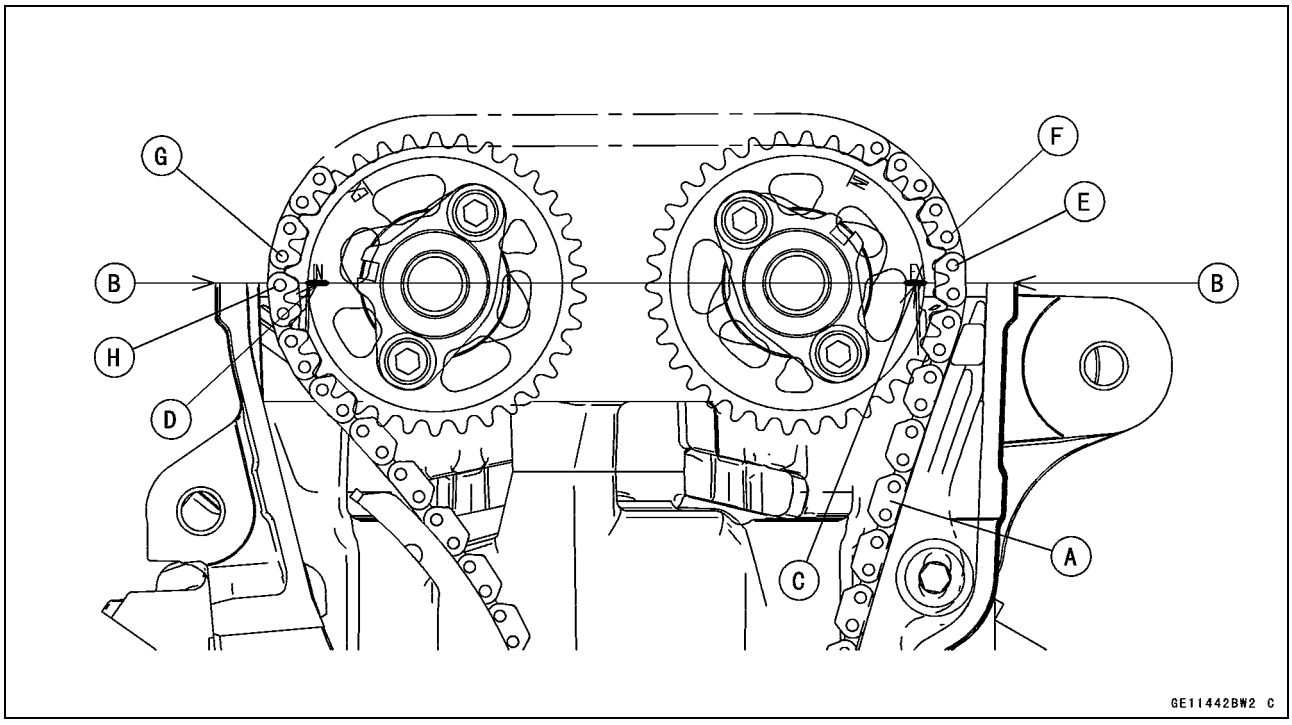

Camshaft, Camshaft Chain

- Before installing the camshaft caps and upper chain guide, install the camshaft chain tensioner body temporarily (see Camshaft Chain Tensioner Installation).
- Install the camshaft caps and upper camshaft chain guide [A] as shown.
  Identification No. 1 ~ 4 (Camshaft Cap) [B]
- First tighten the all camshaft cap bolts and upper camshaft chain guide bolts evenly to seat the camshaft in place, then tighten all bolts following the specified tightening sequence.

Torque - Camshaft Cap Bolts [1 ~ 18]: 12 N·m (1.2 kgf·m, 106 in·lb)
Upper Camshaft Chain Guide Bolts [19, 20]: 12 N·m (1.2 kgf·m, 106 in·lb)

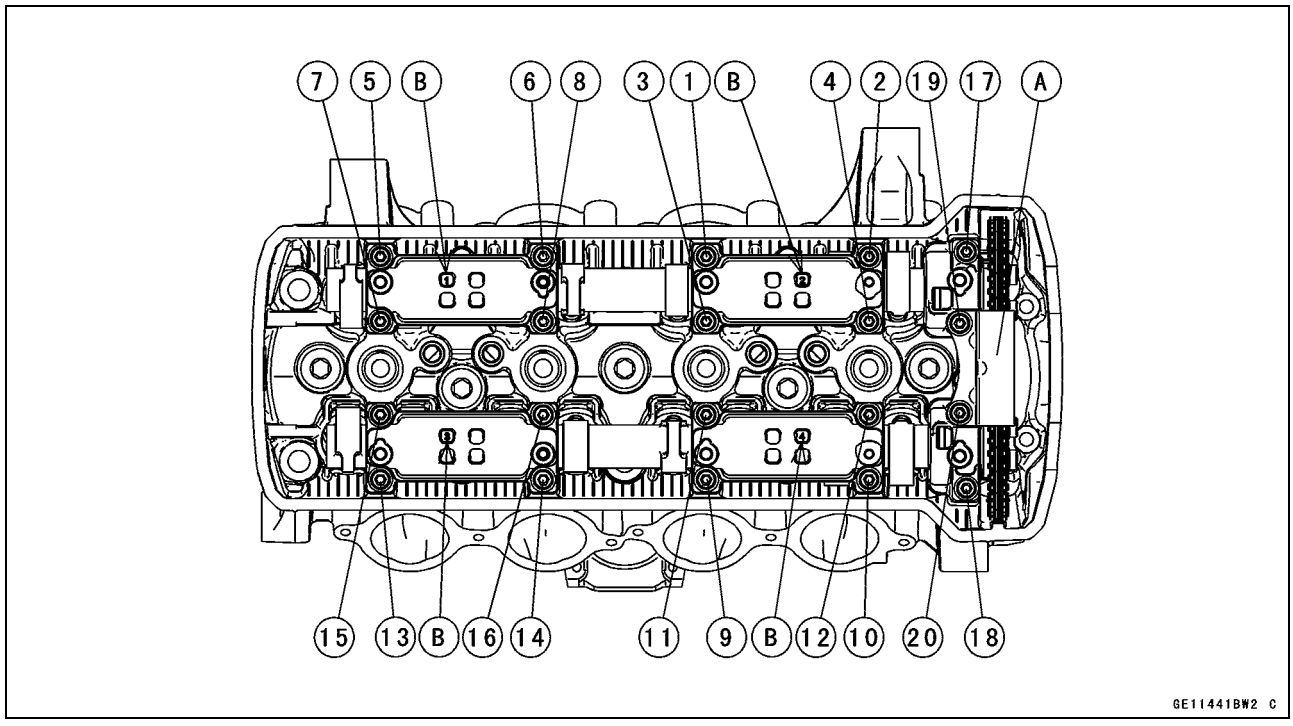

- Install the camshaft chain tensioner (see Camshaft Chain Tensioner Installation).
- Turn the crankshaft 2 turns clockwise to allow the tensioner to expand and recheck the camshaft chain timing.
- Install the removed parts (see appropriate chapters).

Camshaft, Camshaft Chain

Camshaft, Camshaft Cap Wear Inspection

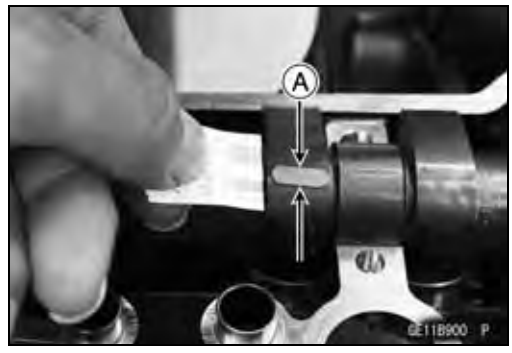

- Remove:
  Camshaft Caps (see Camshaft Removal)
- Cut the strips of plastigage (press gauge) to journal width. Place a strip on each journal parallel to the camshaft installed in the correct position.
- Tighten the camshaft cap bolts and upper camshaft chain guide bolts to the specified torque (see Camshaft Installation).

NOTE

○*Do not turn the camshaft when the plastigage is between the journal and camshaft cap.*

- Remove the camshaft cap again, measure each clearance between the camshaft journal and the camshaft cap using plastigage [A].

Camshaft Journal, Camshaft Cap Clearance

Standard:	**0.038 ~ 0.081 mm (0.0015 ~ 0.0032 in.)**
Service Limit:	**0.17 mm (0.0067 in.)**

★If any clearance exceeds the service limit, measure the diameter of each camshaft journal with a micrometer.

Camshaft Journal Diameter

Standard:	**23.940 ~ 23.962 mm (0.94252 ~ 0.94338 in.)**
Service Limit:	**23.91 mm (0.9413 in.)**

★If the camshaft journal diameter is less than the service limit, replace the camshaft with a new one and measure the clearance again.

★If the clearance still remains out of the service limit, replace the cylinder head unit.

Camshaft Runout Inspection

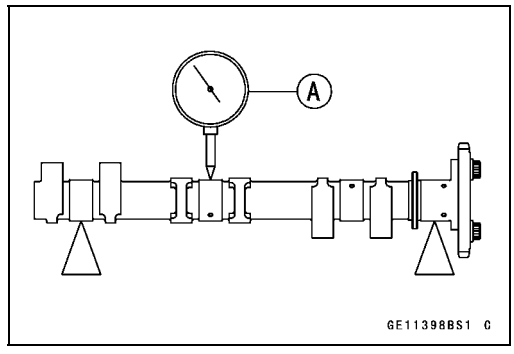

- Remove the camshafts (see Camshaft Removal).
- Set the camshaft in a camshaft alignment jig or on V blocks.
- Measure the runout with a dial gauge [A] at the specified place as shown.

★If the runout exceeds the service limit, replace the camshaft.

Camshaft Runout

Standard:	**TIR 0.02 mm (0.0008 in.) or less**
Service Limit:	**TIR 0.1 mm (0.004 in.)**

Camshaft, Camshaft Chain

Cam Wear Inspection

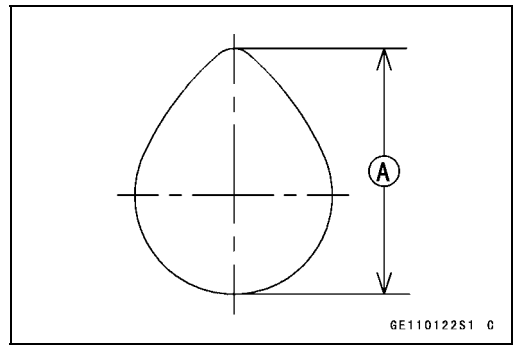

- Remove the camshafts (see Camshaft Removal).
- Measure the height [A] of each cam with a micrometer.

★If the cams are worn down past the service limit, replace the camshaft.

Cam Height

Standard:

Exhaust	**33.743 ~ 33.857 mm (1.3285 ~ 1.3330 in.)**
Intake	**34.443 ~ 34.557 mm (1.3560 ~ 1.3605 in.)**

Service Limit:

Exhaust	**33.64 mm (1.324 in.)**
Intake	**34.34 mm (1.352 in.)**

Camshaft Chain Removal

- Split the crankcase (see Crankcase Splitting in the Crankshaft/Transmission chapter).
- Remove the camshaft chain [A] from the crankshaft sprocket.

Camshaft Chain Installation

- Install the camshaft chain to the crankshaft sprocket.
- Assemble the crankcase (see Crankcase Assembly in the Crankshaft/Transmission chapter).

Cylinder Head

Cylinder Compression Measurement

NOTE

○*Use the battery which is fully charged.*

- Warm up the engine thoroughly.
- Stop the engine.
- Remove:
  Spark Plugs (see Spark Plug Replacement in the Periodic Maintenance chapter)

- Attach the compression gauge [A] and adapter [B] firmly into the spark plug hole.
- Using the starter motor, turn the engine over with the throttle fully open until the compression gauge stops rising; the compression is the highest reading obtainable.

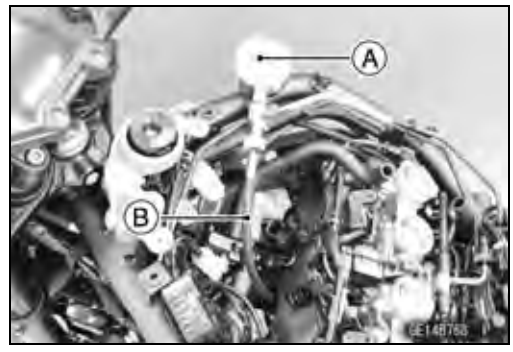

Special Tools - Compression Gauge, 20 kgf/cm²: 57001-221
Compression Gauge Adapter, M10 × 1.0: 57001-1486

Cylinder Compression
Usable Range: 1 120 ~ 1 698 kPa (11.42 ~ 17.32 kgf/cm², 162.4 ~ 246.2 psi) @580 r/min (rpm)

- Repeat the measurement for the other cylinders.
- Install the spark plugs (see Spark Plug Replacement in the Periodic Maintenance chapter).

○The following table should be consulted if the obtainable compression reading is not within the usable range.

Problem	Diagnosis	Remedy (Action)
Cylinder compression is higher than usable range.	Carbon accumulation on piston and in combustion chamber possibly due to damaged valve stem oil seal and/or damaged piston oil rings (This may be indicated by white exhaust smoke).	Remove the carbon deposits and replace damaged parts if necessary.
	Incorrect cylinder head gasket thickness	Replace the gasket with a standard part.
Cylinder compression is lower than usable range.	Gas leakage around cylinder head	Replace damaged gasket and check cylinder head warp.
	Bad condition of valve seating	Repair if necessary.
	Incorrect valve clearance	Adjust the valve clearance.
	Incorrect piston/cylinder clearance	Replace the piston and/or cylinder.
	Piston seizure	Inspect the cylinder and replace/repair the cylinder and/or piston as necessary.
	Bad condition of piston ring and/or piston ring grooves	Replace the piston and/or the piston rings.

Cylinder Head

Cylinder Head Removal

- Drain the coolant (see Coolant Change in the Periodic Maintenance chapter).
- Remove:
  Throttle Body Assy (see Throttle Body Assy Removal in the Fuel System (DFI) chapter)
  Camshafts (see Camshaft Removal)
  Radiator (see Radiator and Radiator Fan Removal in the Cooling System)
  Exhaust Pipe (see Exhaust Pipe Removal)
  Timing Rotor (see Timing Rotor Removal in the Electrical System chapter)

- Free the water temperature sensor connector lead [A] from the clamp, and disconnect the connector.
- Slide the clamps [B].
- Disconnect:
  Water Hose [C]
  Air Bleeder Hose [D]

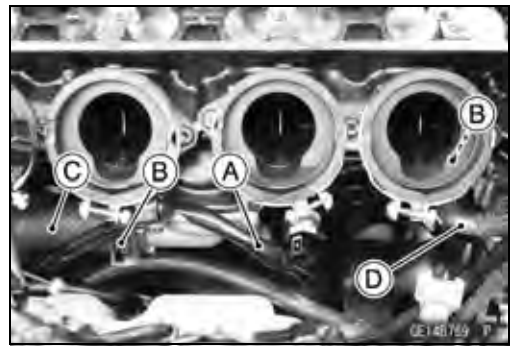

- Remove:
  Front Camshaft Chain Guide Bolt (Upper) [A]
  Front Camshaft Chain Guide Bolt (Lower) [B] and Collar
  Front Camshaft Chain Guide [C]
  Rear Camshaft Chain Guide Bolt [D]
  Rear Camshaft Chain Guide [E]

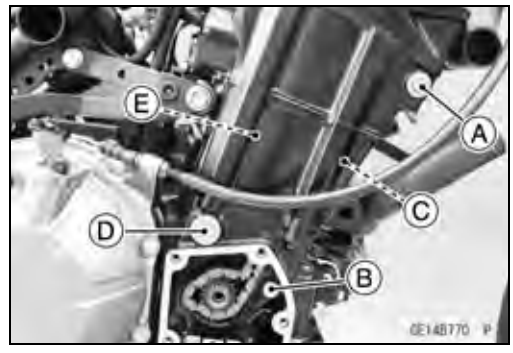

- Remove:
  Upper Front Engine Mounting Bolt [A] (Both Sides)
  Upper Rear Engine Mounting Bolt [B] (Both Sides)
  Upper Rear Engine Bracket Bolts [C] (Both Sides)
  Upper Rear Engine Bracket [D] (Both Sides)

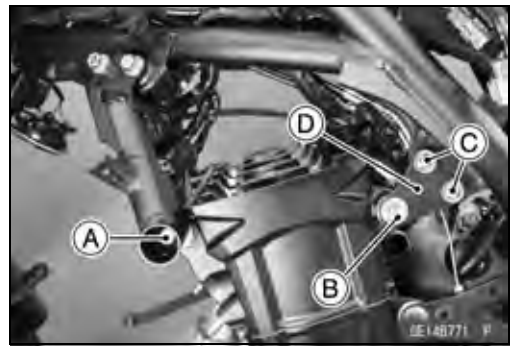

Cylinder Head

- Remove the M6 cylinder head bolts [A].
- Loosen the M10 cylinder head bolts as shown sequence [1 ~ 10], and remove them with washers.

○Remove the M10 cylinder bolt [4] with cylinder head.

- Remove the cylinder head.

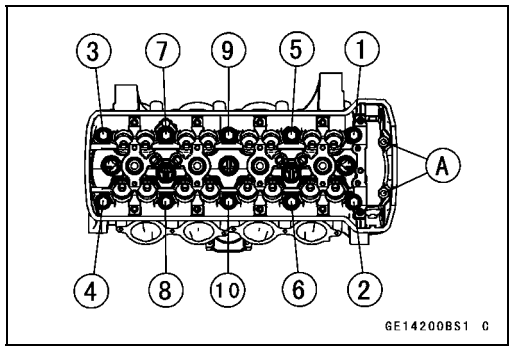

Cylinder Head Installation

NOTE

○*The camshaft cap is machined with the cylinder head, so if a new cylinder head is installed, use the cap that is supplied with the new head.*

- Replace the cylinder head gasket [A] with a new one.
- Install the dowel pins [B] and cylinder head gasket.

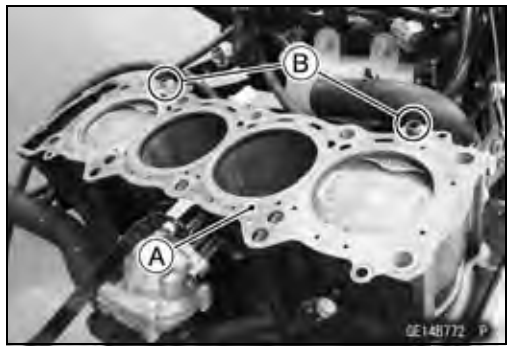

- Replace the cylinder head bolt washers [A] with new ones.
- Apply molybdenum disulfide oil solution to the followings.
  Both Side [B] of Cylinder Head Bolt Washers
  Threads [C] of Cylinder Head Bolts

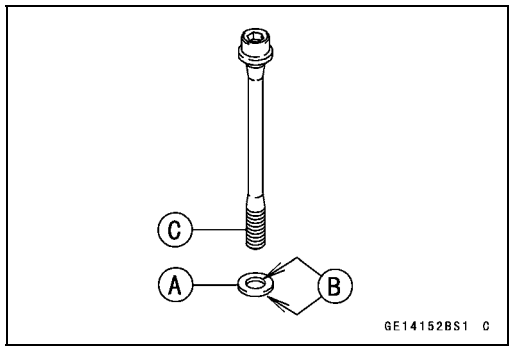

- Install the cylinder head with M10 cylinder head bolt [A].

Cylinder Head

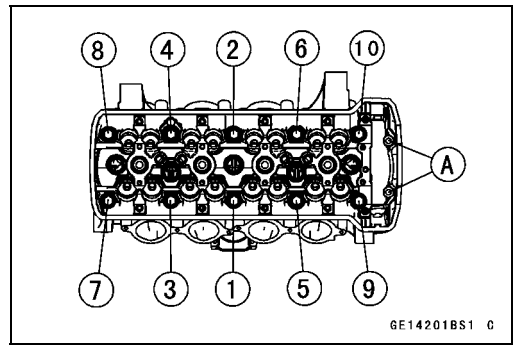

- Tighten the M10 cylinder head bolts following the tightening sequence [1 ~ 10].

  Torque - Cylinder Head Bolts (M10):
  First: 30 N·m (3.1 kgf·m, 22 ft·lb)
  Final: 54 N·m (5.5 kgf·m, 40 ft·lb)

- Tighten the M6 cylinder head bolts [A].

  Torque - Cylinder Head Bolts (M6): 12 N·m (1.2 kgf·m, 106 in·lb)

- Tighten the following parts (see Engine Installation in the Engine Removal/Installation chapter).
  Upper Front Engine Mounting Bolts
  Upper Rear Engine Mounting Bolts
  Upper Rear Engine Bracket Bolts

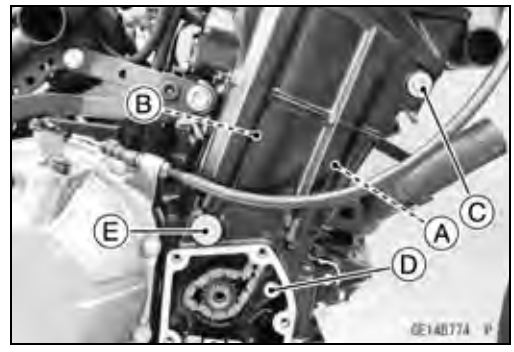

- Replace the O-rings with new ones.
- Install:
  Front Camshaft Chain Guide [A]
  Rear Camshaft Chain Guide [B]
  Front Camshaft Chain Guide Bolt (Upper) [C] with O-ring
  Front Camshaft Chain Guide Bolt (Lower) [D] with Collar
  Rear Camshaft Chain Guide Bolt [E] with O-ring
- Tighten:

  Torque - Front Camshaft Chain Guide Bolt (Upper): 25 N·m (2.5 kgf·m, 18 ft·lb)
  Front Camshaft Chain Guide Bolt (Lower): 12 N·m (1.2 kgf·m, 106 in·lb)
  Rear Camshaft Chain Guide Bolt: 25 N·m (2.5 kgf·m, 18 ft·lb)

- Install the removed parts (see appropriate chapters).

Cylinder Head Warp Inspection

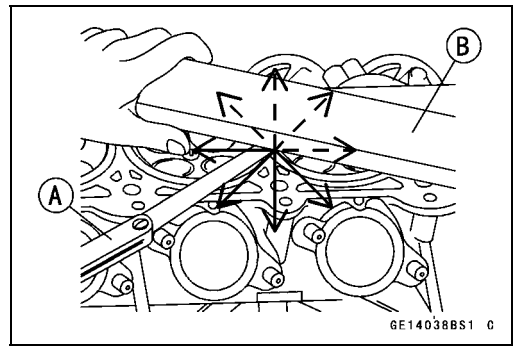

- Clean the cylinder head.
- Lay a straightedge across the lower surface of the cylinder head at several positions.
- Use a thickness gauge [A] to measure the space between the straightedge [B] and the head.

  Cylinder Head Warp
  Standard: – – –
  Service Limit: 0.05 mm (0.002 in.)

★If the cylinder head is warped more than the service limit, replace it.

★If the cylinder head is warped less than the service limit, repair the head by rubbing the lower surface on emery paper secured to a surface plate (first No. 200, then No. 400).

Valves

Valve Clearance Inspection

● Refer to the Valve Clearance Inspection in the Periodic Maintenance chapter.

Valve Clearance Adjustment

● Refer to the Valve Clearance Adjustment in the Periodic Maintenance chapter.

Valve Removal

● Remove:
Cylinder Head (see Cylinder Head Removal)
Valve Lifter and Shim

NOTE

○*Mark and record the valve lifter and shim locations so they can be installed in their original positions.*

● Using the valve spring compressor assembly [A] and adapter [B], remove the valve.

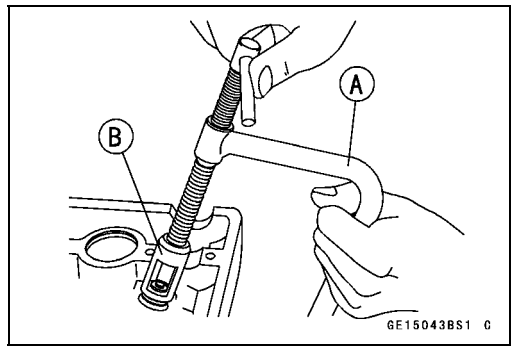

Special Tools - Valve Spring Compressor Assembly: 57001 -241

[For Exhaust Valve]
Valve Spring Compressor Adapter, ϕ22: 57001-1202

[For Intake Valve]
Valve Spring Compressor Adapter, ϕ24: 57001-1586

Valve Installation

● Replace the oil seal with a new one.
● Apply a thin coat of molybdenum disulfide grease to the valve stem before valve installation.
● Install the springs so that the closed coil end faces downwards (the side painted in light blue or green faces upwards).
Valve Stem [A]
Oil Seal [B]
Spring Seat [C]
Closed Coil End [D]
Valve Spring [E]
Retainer [F]
Split Keepers [G]

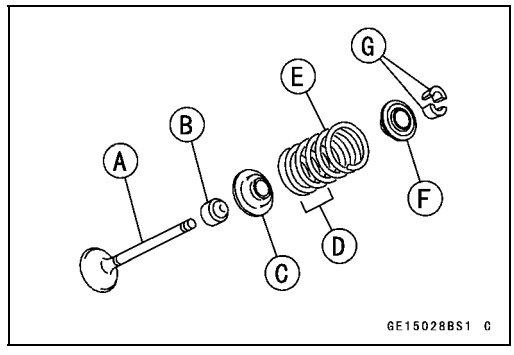

Valve Guide Removal

● Remove:
Valve (see Valve Removal)
Oil Seal
Spring Seat
● Heat the area around the valve guide to 120 ~ 150°C (248 ~ 302°F), and hammer lightly on the valve guide arbor [A] to remove the guide from the top of the head.

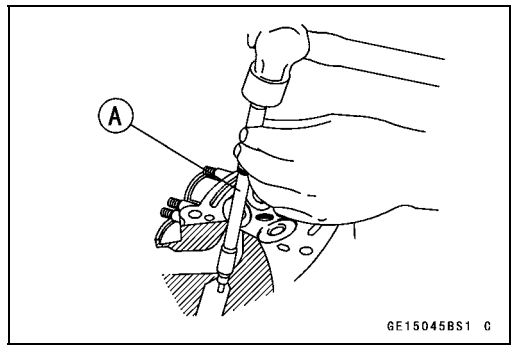

NOTICE

Do not heat the cylinder head with a torch. This will warp the cylinder head. Soak the cylinder head in oil and heat the oil.

Special Tool - Valve Guide Arbor, ϕ4.5: 57001-1331

Valves

Valve Guide Installation

- Apply oil to the valve guide outer surface before installation.
- Heat the area around the valve guide hole to about 120 ~ 150°C (248 ~ 302°F).

NOTICE
Do not heat the cylinder head with a torch. This Will warp the cylinder head. Soak the cylinder head and heat the oil.

- Using the valve guide driver [A] and two washers [B], press and insert the valve guide in until the valve guide driver surface touches the head surface [C].
  12.8 ~ 13.0 mm (0.504 ~ 0.512 in.) [D]

  Special Tools - Valve Guide Driver: 57001-1564
  Washer: 57001-1612

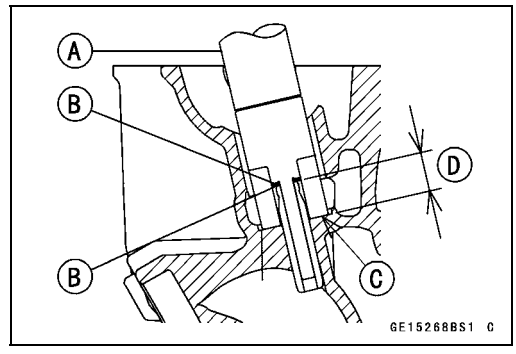

- Ream the valve guide with valve guide reamer [A], even if the old guide is reused.

  Special Tool - Valve Guide Reamer, ϕ4.5: 57001-1333

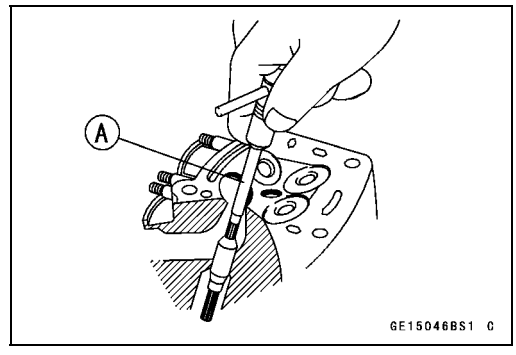

Valves

Valve-to-Guide Clearance Measurement (Wobble Method)

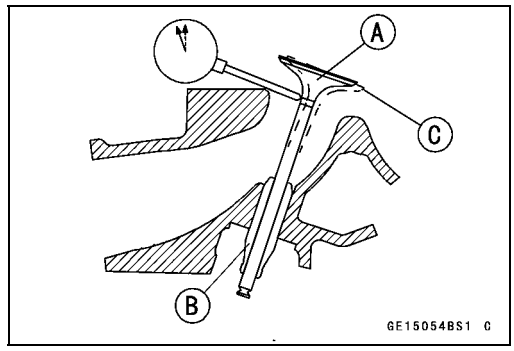

If a small bore gauge is not available, inspect the valve guide wear by measuring the valve to valve guide clearance with the wobble method as indicated below.

- Insert a new valve [A] into the guide [B] and set a dial gauge against the stem perpendicular to it as close as possible to the cylinder head mating surface.
- Move the stem back and forth [C] to measure valve/valve guide clearance.
- Repeat the measurement in a direction at a right angle to the first.

★If the reading exceeds the service limit, replace the guide.

NOTE

○*The reading is not actual valve/valve guide clearance because the measuring point is above the guide.*

Valve/Valve Guide Clearance (Wobble Method)

Standard:

Exhaust	**0.08 ~ 0.16 mm (0.0031 ~ 0.0063 in.)**
Intake	**0.03 ~ 0.10 mm (0.0012 ~ 0.0039 in.)**

Service Limit:

Exhaust	**0.35 mm (0.014 in.)**
Intake	**0.30 mm (0.012 in.)**

Valve Seat Inspection

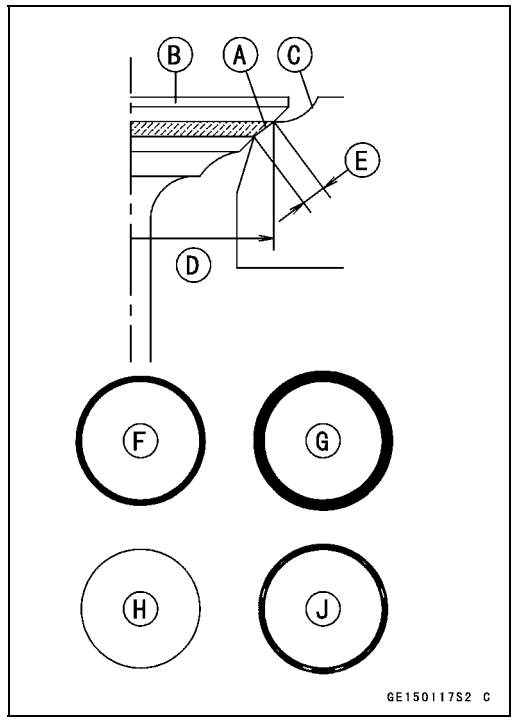

- Remove the valve (see Valve Removal).
- Check the valve seating surface [A] between the valve [B] and valve seat [C].

○Measure the outside diameter [D] of the seating pattern on the valve seat.

★If the outside diameter is too large or too small, repair the seat (see Seat Repair).

Valve Seating Surface Outside Diameter

Standard:

Exhaust	**23.4 ~ 23.6 mm (0.921 ~ 0.929 in.)**
Intake	**28.3 ~ 28.5 mm (1.11 ~ 1.12 in.)**

○Measure the seat width [E] of the portion where there is no build-up carbon (white portion) of the valve seat with a vernier caliper.

Good [F]

★If the width is too wide [G], too narrow [H] or uneven [J], repair the seat (see Valve Seat Repair).

Valve Seating Surface Width

Standard:

Exhaust	**0.8 ~ 1.2 mm (0.031 ~ 0.047 in.)**
Intake	**0.5 ~ 1.0 mm (0.020 ~ 0.039 in.)**

Valves

Valve Seat Repair

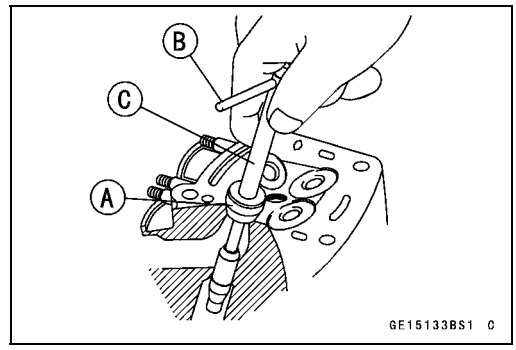

● Repair the valve seat with the valve seat cutters [A].

Special Tools - Valve Seat Cutter Holder Bar [B]: 57001 -1128
Valve Seat Cutter Holder, ϕ4.5 [C]: 57001 -1330

[For Exhaust Valve Seat]
Valve Seat Cutter, 45° - ϕ27.5: 57001-1114
Valve Seat Cutter, 32° - ϕ25: 57001-1118
Valve Seat Cutter, 60° - ϕ27: 57001-1409

[For Intake Valve Seat]
Valve Seat Cutter, 45° - ϕ32: 57001-1115
Valve Seat Cutter, 32° - ϕ28: 57001-1119
Valve Seat Cutter, 60° - ϕ33: 57001-1334

★If the manufacturer's instructions are not available, use the following procedure.

Seat Cutter Operation Care

1. This valve seat cutter is developed to grind the valve for repair. Therefore the cutter must not be used for other purposes than seat repair.
2. Do not drop or shock the valve seat cutter, or the diamond particles may fall off.
3. Do not fail to apply engine oil to the valve seat cutter before grinding the seat surface. Also wash off ground particles sticking to the cutter with washing oil.

NOTICE
Do not use a wire brush to remove the metal particles from the cutter. It will take off the diamond particles.

4. Setting the valve seat cutter holder in position, operate the cutter in one hand. Do not apply too much force to the diamond portion.

NOTE

○*Prior to grinding, apply engine oil to the cutter and during the operation, wash off any ground particles sticking to the cutter with washing oil.*

5. After use, wash it with washing oil and apply thin layer of engine oil before storing.

Marks Stamped on the Cutter

The marks stamped on the back of the cutter [A] represent the following.
60° ..... Cutter angle [B]
37.5ϕ ..... Outer diameter of cutter [C]

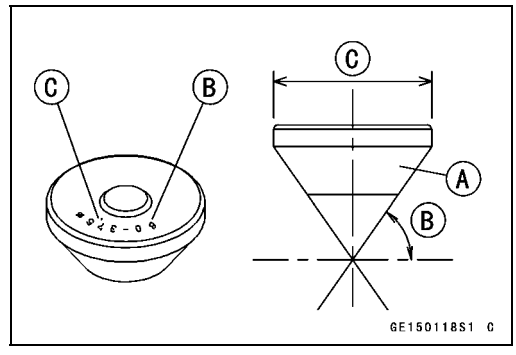

Valves

Operating Procedures

- Clean the seat area carefully.
- Coat the seat with machinist's dye.
- Fit a 45° cutter into the holder and slide it into the valve guide.
- Press down lightly on the handle and turn it right or left. Grind the seating surface only until it is smooth.

NOTICE

Do not grind the seat too much. Overgrinding will reduce valve clearance by sinking the valve into the head. If the valve sinks too far into the head, it will be impossible to adjust the clearance, and the cylinder head must be replaced.

- Measure the outside diameter of the seating surface with a vernier caliper.

★If the outside diameter of the seating surface is too small, repeat the 45° grind until the diameter is within the specified range.

Widened Width [A] of engagement by machining with 45° cutter
Ground Volume [B] by 32° cutter
32° [C]
Correct Width [D]
Ground Volume [E] by 60° cutter
60° [F]

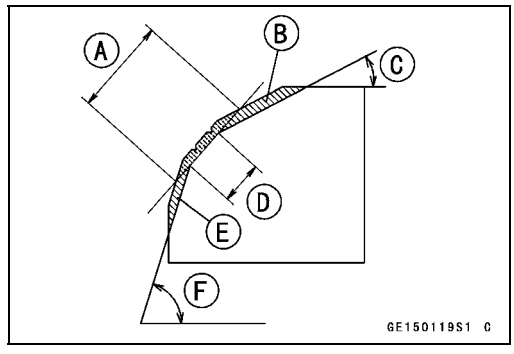

- Measure the outside diameter of the seating surface with a vernier caliper.

★If the outside diameter of the seating surface is too small, repeat the 45° [A] grind until the diameter is within the specified range.

Original Seating Surface [B]

NOTE

○*Remove all pittings of flaws from 45° ground surface.*
○*After grinding with 45° cutter, apply thin coat of machinist's dye to seating surface. This makes seating surface distinct and 32° and 60° grinding operation easier.*
○*When the valve guide is replaced, be sure to grind with 45° cutter for centering and good contact.*

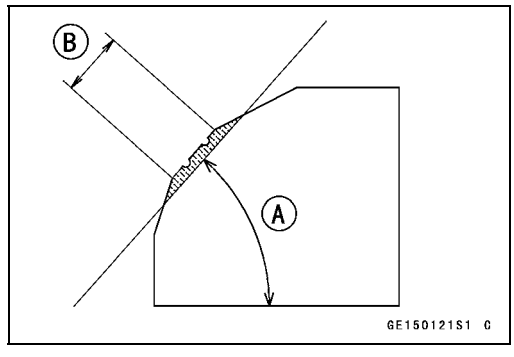

Valves

★If the outside diameter [A] of the seating surface is too large, make the 32° [B] grind described below.
★If the outside diameter of the seating surface is within the specified range, measure the seat width as described below.
● Grind the seat at a 32° angle until the seat outside diameter is within the specified range.
○To make the 32° grind, fit a 32° cutter into the holder, and slide it into the valve guide.
○Turn the holder one turn at a time while pressing down very lightly. Check the seat after each turn.

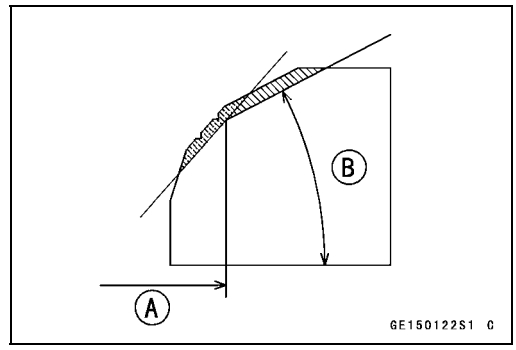

NOTICE

The 32° cutter removes material very quickly. Check the seat outside diameter frequently to prevent overgrinding.

○After making the 32° grind, return to the seat outside diameter measurement step above.
● To measure the seat width, use a vernier caliper to measure the width of the 45° angle portion of the seat at several places around the seat.
★If the seat width is too narrow, repeat the 45° grind until the seat is slightly too wide, and then return to the seat outside diameter measurement step above.

★If the seat width is too wide, make the 60° [A] grind described below.
★If the seat width is within the specified range, lap the valve to the seat as described below.
● Grind the seat at a 60° angle until the seat width is within the specified range.
○To make the 60° grind, fit 60° cutter into the holder, and slide it into the valve guide.
○Turn the holder, while pressing down lightly.
○After making the 60° grind, return to the seat width measurement step above.
Correct Width [B]

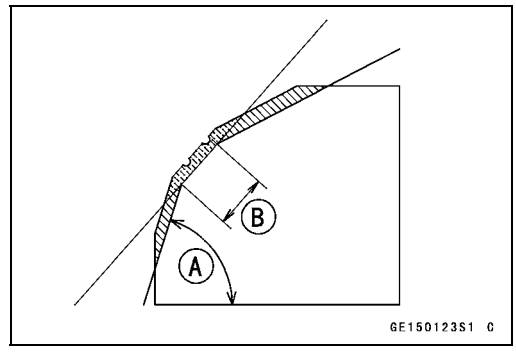

Valves

● Lap the valve to the valve seat, once the seat width and outside diameter are within the ranges specified above.
○Put a little coarse grinding compound on the face of the valve in a number of places around the valve head.
○Spin the valve against the seat until the grinding compound produces a smooth, matched surface on both the seat and the valve.
○Repeat the process with a fine grinding compound.
Lapper [A]
Valve Seat [B]
Valve [C]
● The seating area should be marked about in the middle of the valve face.
★If the seat area is not in the right place on the valve, check to be sure the valve is the correct part. If it is, it may have been refaced too much; replace it.
● Be sure to remove all grinding compound before assembly.
● When the engine is assembled, be sure to adjust the valve clearance (see Valve Clearance Inspection in the Periodic Maintenance chapter).

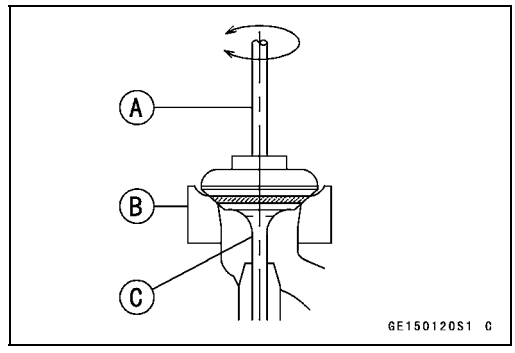

Valves

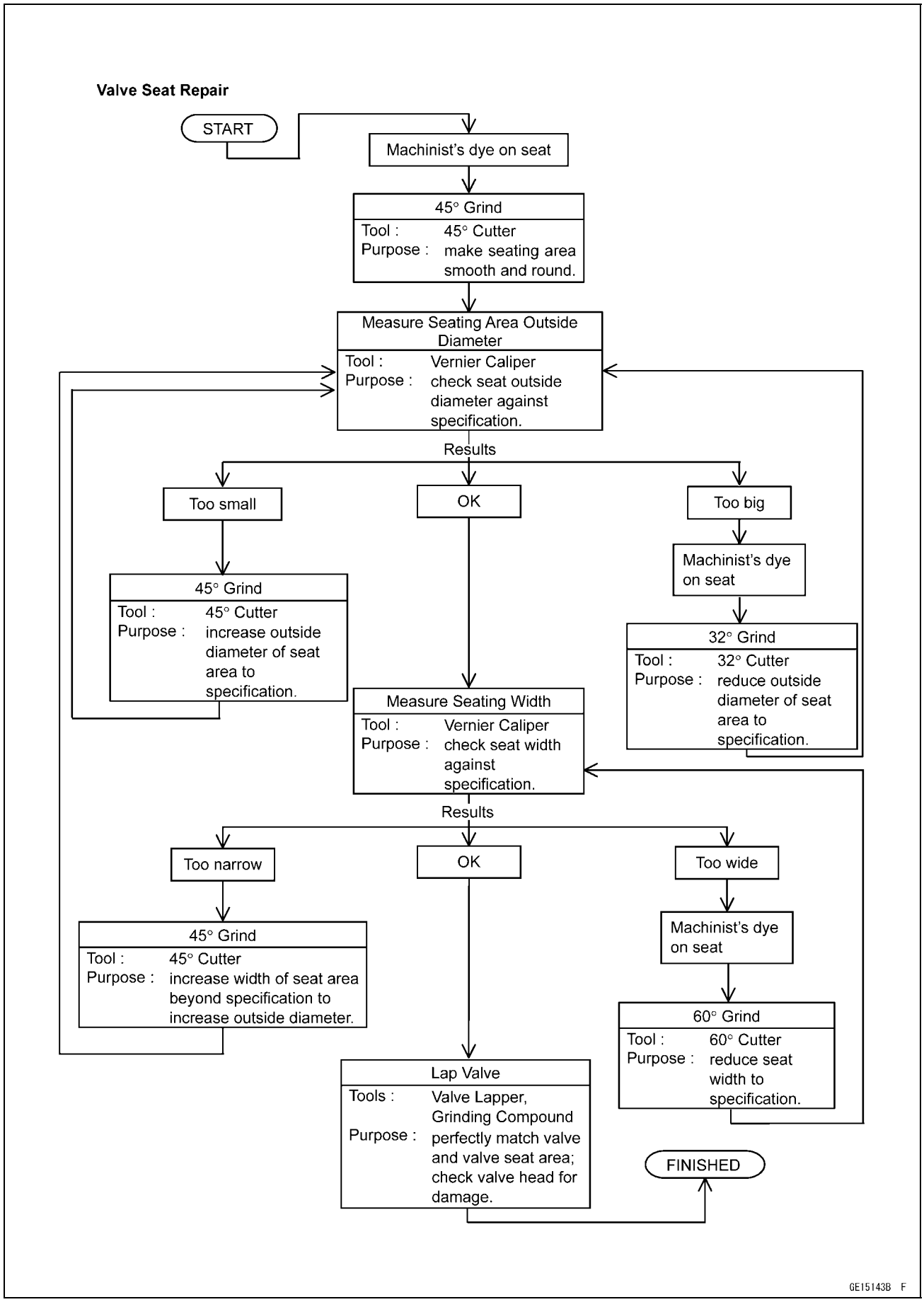
Valve Seat Repair
START
Machinist's dye on seat
45° Grind
Tool : 45° Cutter
Purpose : make seating area smooth and round.
Measure Seating Area Outside Diameter
Tool : Vernier Caliper
Purpose : check seat outside diameter against specification.
Results
Too small
OK
Too big
45° Grind
Tool : 45° Cutter
Purpose : increase outside diameter of seat area to specification.
Machinist's dye on seat
32° Grind
Tool : 32° Cutter
Purpose : reduce outside diameter of seat area to specification.
Measure Seating Width
Tool : Vernier Caliper
Purpose : check seat width against specification.
Results
Too narrow
OK
Too wide
45° Grind
Tool : 45° Cutter
Purpose : increase width of seat area beyond specification to increase outside diameter.
Machinist's dye on seat
60° Grind
Tool : 60° Cutter
Purpose : reduce seat width to specification.
Lap Valve
Tools : Valve Lapper, Grinding Compound
Purpose : perfectly match valve and valve seat area; check valve head for damage.
FINISHED
GE15143B F

Cylinder, Pistons

Cylinder Removal

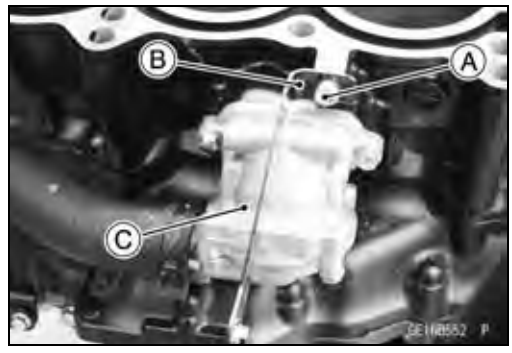

- Remove:
  Cylinder Head (see Cylinder Head Removal)
  Radiator Bracket Bolt [A]
  Radiator Bracket [B]
  Thermostat Housing [C] (see Thermostat Removal in the Coolant chapter)

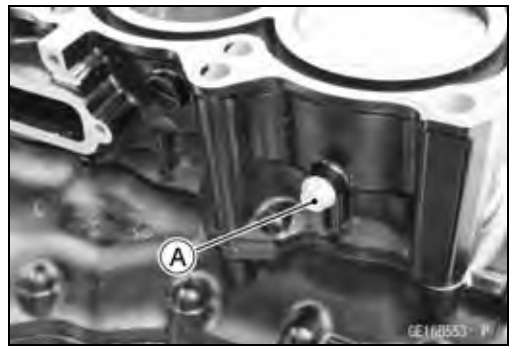

- Remove the drain bolt [A], and drain the coolant from the cylinder.

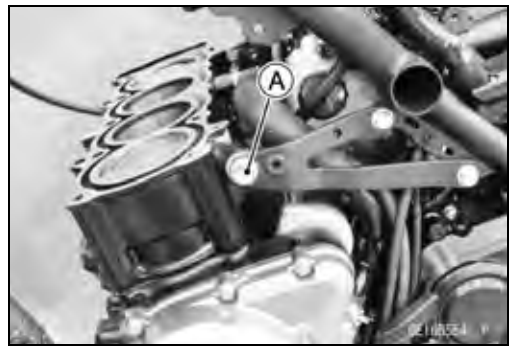

- Remove:
  Middle Front Engine Mounting Bolt [A] (Both Sides)
- Remove the cylinder.

NOTE

○*If it is hard to remove it, tap lightly using a plastic-faced mallet.*

Cylinder Installation

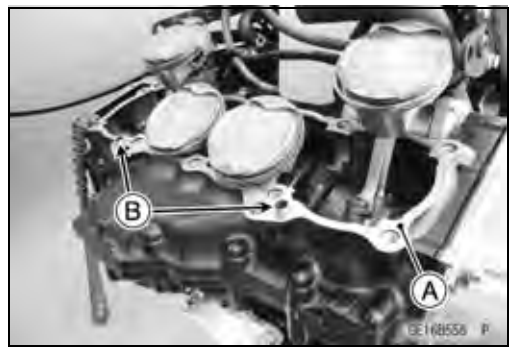

NOTE

○*If a new cylinder is used, use new piston ring.*

- Replace the cylinder gasket [A] with a new one.
- Install the dowel pins [B] and new cylinder gasket.
- Apply molybdenum disulfide oil solution to the cylinder bore.

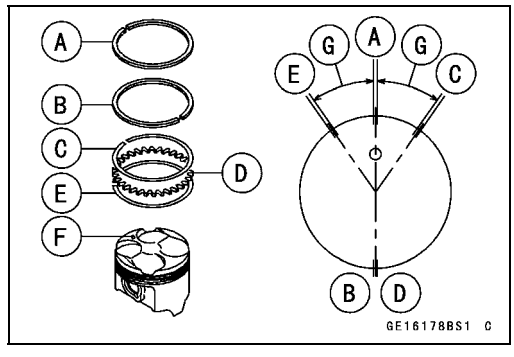

- The piston ring openings must be positioned as shown. The openings of the oil ring steel rails must be about 30 ~ 40° of angle from the opening of the top ring.
  Top Ring [A]
  Second Ring [B]
  Upper Oil Ring Steel Rail [C]
  Oil Ring Expander [D]
  Lower Oil Ring Steel Rail [E]
  Dent [F]
  30 ~ 40° [G]

Cylinder, Pistons

- Position the crankshaft at #2, 3 piston TDC.
- Prepare two auxiliary head bolts with their head cut.

○Install the two cylinder head bolts [A] diagonally in the crankcase.

- Install the cylinder block [B].
  Pistons [C]

○First insert the #2, 3 pistons, and then rotate the crankshaft at 90° angle, and insert the #1, 4 pistons.

○Insert the piston rings with your thumbs or the flat tip screwdriver.

- Wipe off any excess oil.
- Install the removed parts (see appropriate chapters).

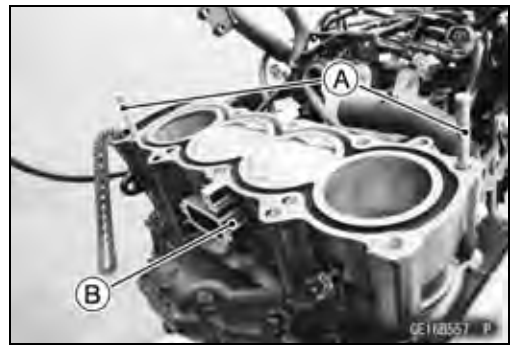

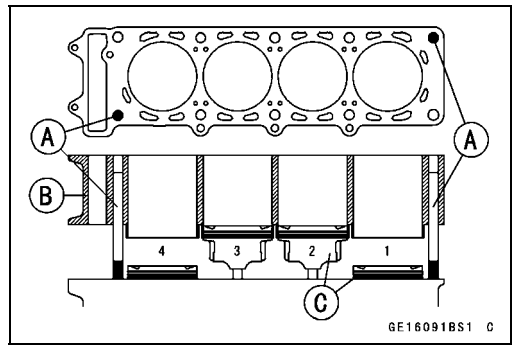

Piston Removal

- Remove the cylinder (see Cylinder Removal).
- Place a clean cloth under the pistons and remove the piston pin snap ring [A] from the outside of each piston.

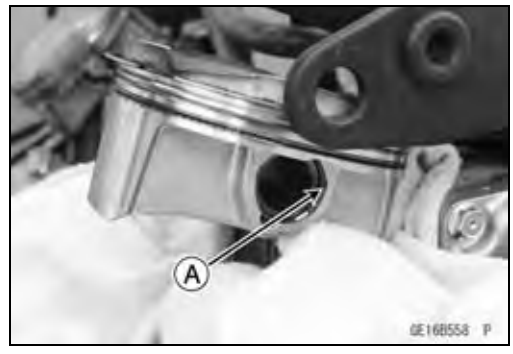

- Using the piston pin puller assembly [A], remove the piston pins.

  Special Tool - Piston Pin Puller Assembly: 57001-910

- Remove the pistons.

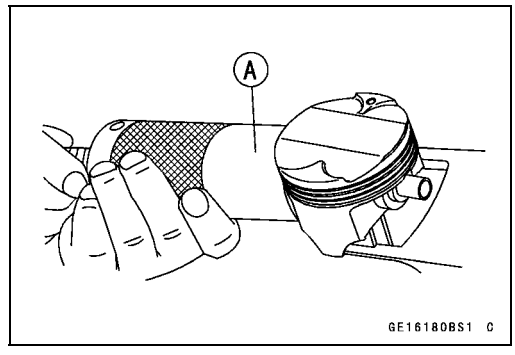

- Carefully spread the ring opening with your thumbs and then push up on the opposite side of the ring [A] to remove it.
- Remove the 3-piece oil ring with your thumbs in the same manner.

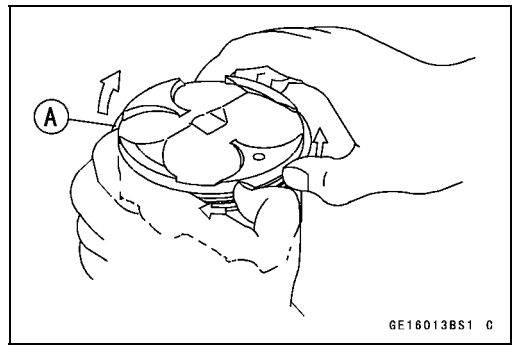

Cylinder, Pistons

Piston Installation

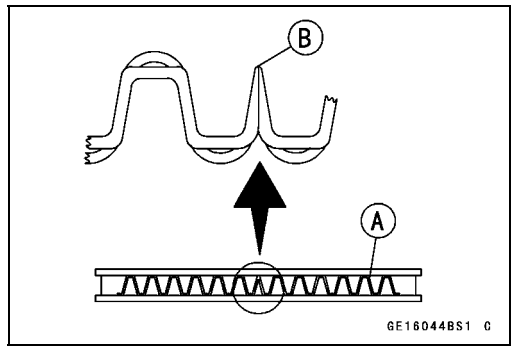

NOTE

○*If a new piston is used, use new piston ring.*

- Apply molybdenum disulfide oil solution to the oil ring expander, and install the oil ring expander [A] in the bottom piston ring groove so the ends [B] not butt together.
- Apply molybdenum disulfide oil solution to the oil ring steel rails, and install the oil ring steel rails, one above the expander and one below it.

○Spread the rail with your thumbs, but only enough to fit the rail over the piston.

○Release the rail into the bottom piston ring groove.

NOTE

○*The oil ring rails have no "top" or "bottom."*

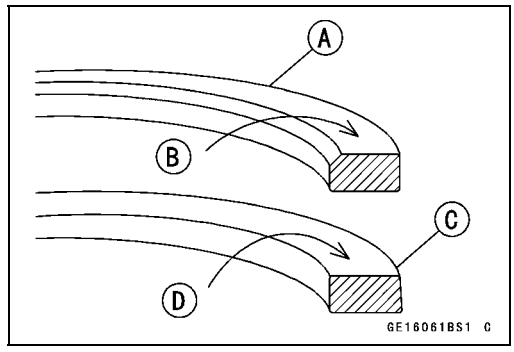

- Apply molybdenum disulfide oil solution to the piston rings.

NOTE

○*Do not mix up the top and second ring.*

- Install the top ring [A] so that the "1R" mark [B] faces up.
- Install the second ring [C] so that the "2R" mark [D] faces up.

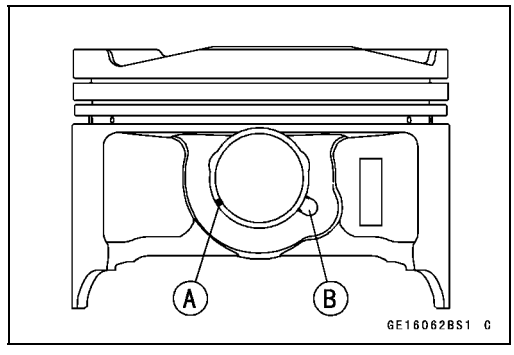

- Install the piston with its dent mark facing forward.
- Apply molybdenum disulfide oil solution to the piston pins and piston journals.
- Fit a new piston pin snap ring into the side of the piston so that the ring opening [A] does not coincide with the slit [B] of the piston pin hole.

○When installing the piston pin snap ring, compress it only enough to install it and no more.

NOTICE

Do not reuse snap rings, as removal weakens and deforms them. They could fall out and score the cylinder wall.

- Install the cylinder (see Cylinder Installation).

Cylinder Wear Inspection

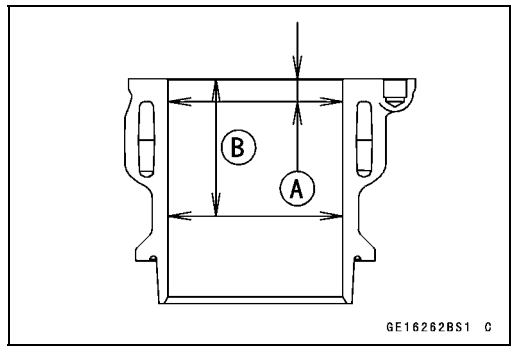

- Since there is a difference in cylinder wear in different directions, take a side-to-side and a front-to-back measurement at each of the two locations (total of four measurements) as shown.

★If any of the cylinder inside diameter measurements exceeds the service limit, replace the cylinder.

10 mm (0.39 in.) [A]
60 mm (2.36 in.) [B]

Cylinder Inside Diameter

Standard: 73.394 ~ 74.406 mm (2.8895 ~ 2.8900 in.)

Service Limit: 73.49 mm (2.893 in.)

Cylinder, Pistons

Piston Wear Inspection

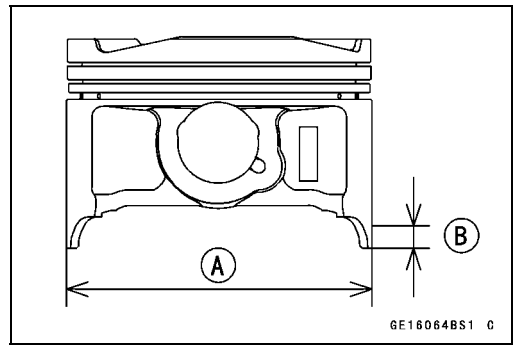

- Measure the outside diameter [A] of each piston 11 mm (0.43 in.) [B] up from the bottom of the piston at a right angle to the direction of the piston pin.

★If the measurement is under service limit, replace the piston.

Piston Diameter

Standard:	**73.374 ~ 73.384 mm (2.8887 ~ 2.8891 in.)**
Service Limit:	**73.22 mm (2.883 in.)**

Piston Ring, Piston Ring Groove Wear Inspection

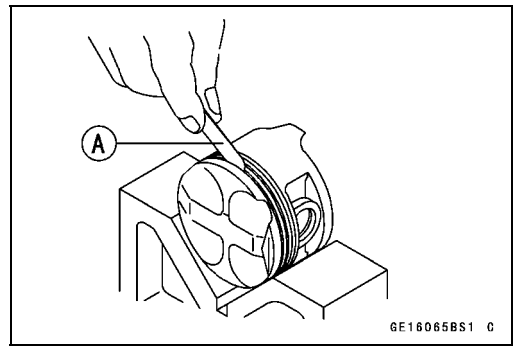

- Check for uneven groove wear by inspecting the ring seating.

★The rings should fit perfectly parallel to groove surfaces. If not, replace the piston and all the piston rings.

- With the piston rings in their grooves, make several measurements with a thickness gauge [A] to determine piston ring/groove clearance.

Piston Ring/Groove Clearance

Standard:	
Top	**0.035 ~ 0.070 mm (0.00138 ~ 0.00276 in.)**
Second	**0.020 ~ 0.055 mm (0.00079 ~ 0.00217 in.)**
Service Limit:	
Top	**0.17 mm (0.0067 in.)**
Second	**0.16 mm (0.0063 in.)**

Piston Ring Groove Width Inspection

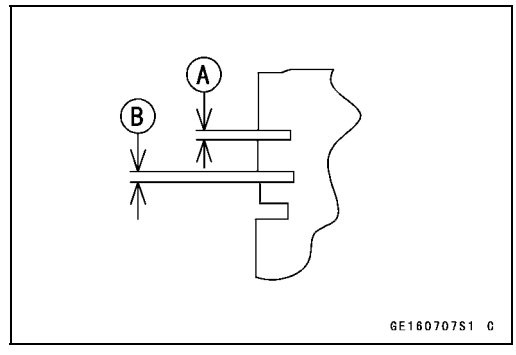

- Measure the piston ring groove width.

○Use a vernier caliper at several points around the piston.

Piston Ring Groove Width

Standard:	
Top [A]	**0.82 ~ 0.84 mm (0.0323 ~ 0.0331 in.)**
Second [B]	**0.81 ~ 0.83 mm (0.0319 ~ 0.0327 in.)**
Service Limit:	
Top	**0.92 mm (0.0362 in.)**
Second	**0.91 mm (0.0358 in.)**

★If the width of any of the two grooves are wider than the service limit at any point, replace the piston.

Cylinder, Pistons

Piston Ring Thickness Inspection

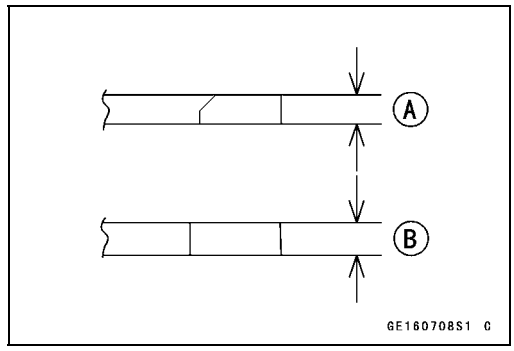

● Measure the piston ring thickness.

○Use the micrometer to measure at several points around the ring.

Piston Ring Thickness

Standard:

Top [A]	**0.770 ~ 0.785 mm (0.0303 ~ 0.0309 in.)**
Second [B]	**0.775 ~ 0.790 mm (0.0305 ~ 0.0311 in.)**

Service Limit:

Top	**0.70 mm (0.028 in.)**
Second	**0.71 mm (0.028 in.)**

★If any of the measurements is less than the service limit on either of the rings, replace all the rings.

NOTE

○*When using new rings in a used piston, check for uneven groove wear. The rings should fit perfectly parallel to the groove sides. If not, replace the piston.*

Piston Ring End Gap Inspection

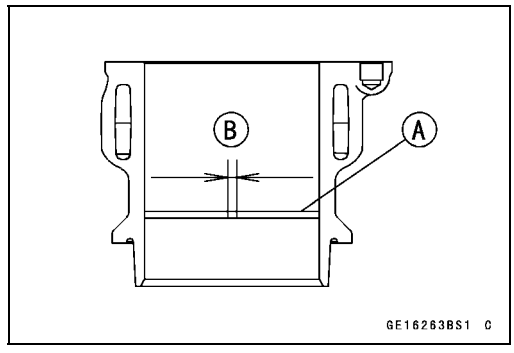

● Place the piston ring [A] inside the cylinder, using the piston to locate the ring squarely in place. Set it close to the bottom of the cylinder, where cylinder wear is low.

● Measure the gap [B] between the ends of the ring with a thickness gauge.

Piston Ring End Gap

Standard:

Top	**0.15 ~ 0.25 mm (0.0059 ~ 0.0098 in.)**
Second	**0.30 ~ 0.40 mm (0.0118 ~ 0.0157 in.)**

Service Limit:

Top	**0.6 mm (0.02 in.)**
Second	**0.7 mm (0.03 in.)**

★If the end gap of either ring is greater than the service limit, replace all the rings.

Throttle Body Assy Holder

Throttle Body Assy Holder Removal

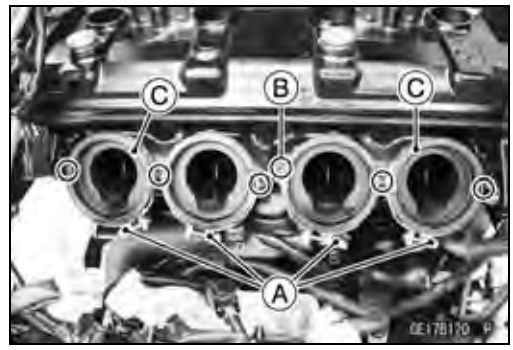

- Remove:
  Throttle Body Assy (see Throttle Body Assy Removal in the Fuel System (DFI) chapter)
  Clamps [A]
  Throttle Body Assy Holder Bolts [B]
  Throttle Body Assy Holders [C]

Throttle Body Assy Holder Installation

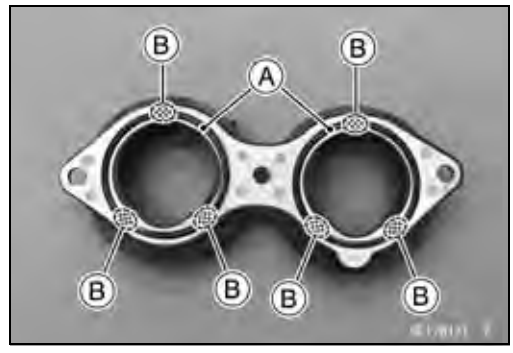

- Replace the O-rings [A] with new ones.
- Apply liquid gasket to any three positions [B] of the O -rings to prevent it from coming off, and install them.

  Sealant - Liquid Gasket, TB1211F: 92104-0004

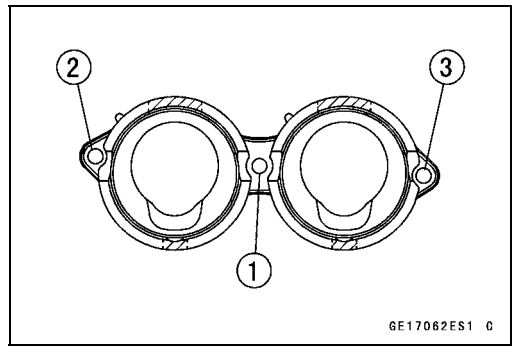

- Install:
  Throttle Body Assy Holders
- Tighten the throttle body assy holder bolts following the specified tightening sequence [1 ~ 3].

  Torque - Throttle Body Assy Holder Bolts: 12 N·m (1.2 kgf·m, 106 in·lb)
- Wipe off any excess liquid gasket.

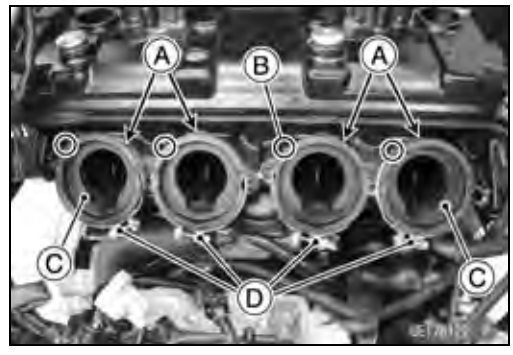

- Fit the hole of all clamps [A] to the projection [B] of all holders [C].

○Be sure that the clamp bolt heads [D] face as shown.

- Install:
  Throttle Body Assy (see Throttle Body Assy Installation in the Fuel System (DFI) chapter)

Muffler

⚠ WARNING

The exhaust pipe or muffler body can become extremely hot during normal operation and cause severe burns. Do not remove the exhaust pipe or muffler body while it is hot.

Muffler Body Removal

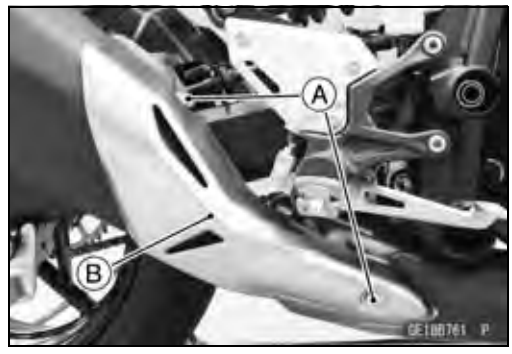

- Remove:
  Bolts [A] with Collars
  Muffler Cover [B]

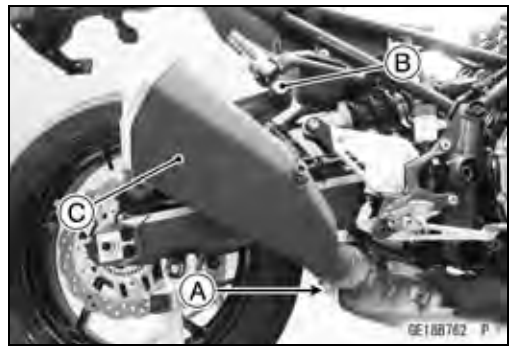

- Loosen the muffler body clamp bolt [A].
- Remove:
  Muffler Body Mounting Bolt [B], Washer and Nut
  Muffler Body [C]

Muffler

This page intentionally left blank.

Muffler

Muffler Body Installation

- Replace the muffler body gasket [A] with a new one.
- Install the muffler body gasket until it is bottomed so that the inside chamfer side face front [B].
- Install the muffler body clamp [C] so that the projection [D] fits into the clamp slit.
- Install the muffler body until it stop at the bottom surface of the exhaust pipe.
- Replace the muffler body mounting nut [E] with a new one.
- Install the muffler body mounting bolt [F] and nut.
- Tighten:

Torque - Muffler Body Mounting Bolt: 34 N·m (3.5 kgf·m, 25 ft·lb)

- Turn the muffler body clamp outward until it stops at the slit ends.
- Tighten the muffler body clamp bolt [G].

Muffler

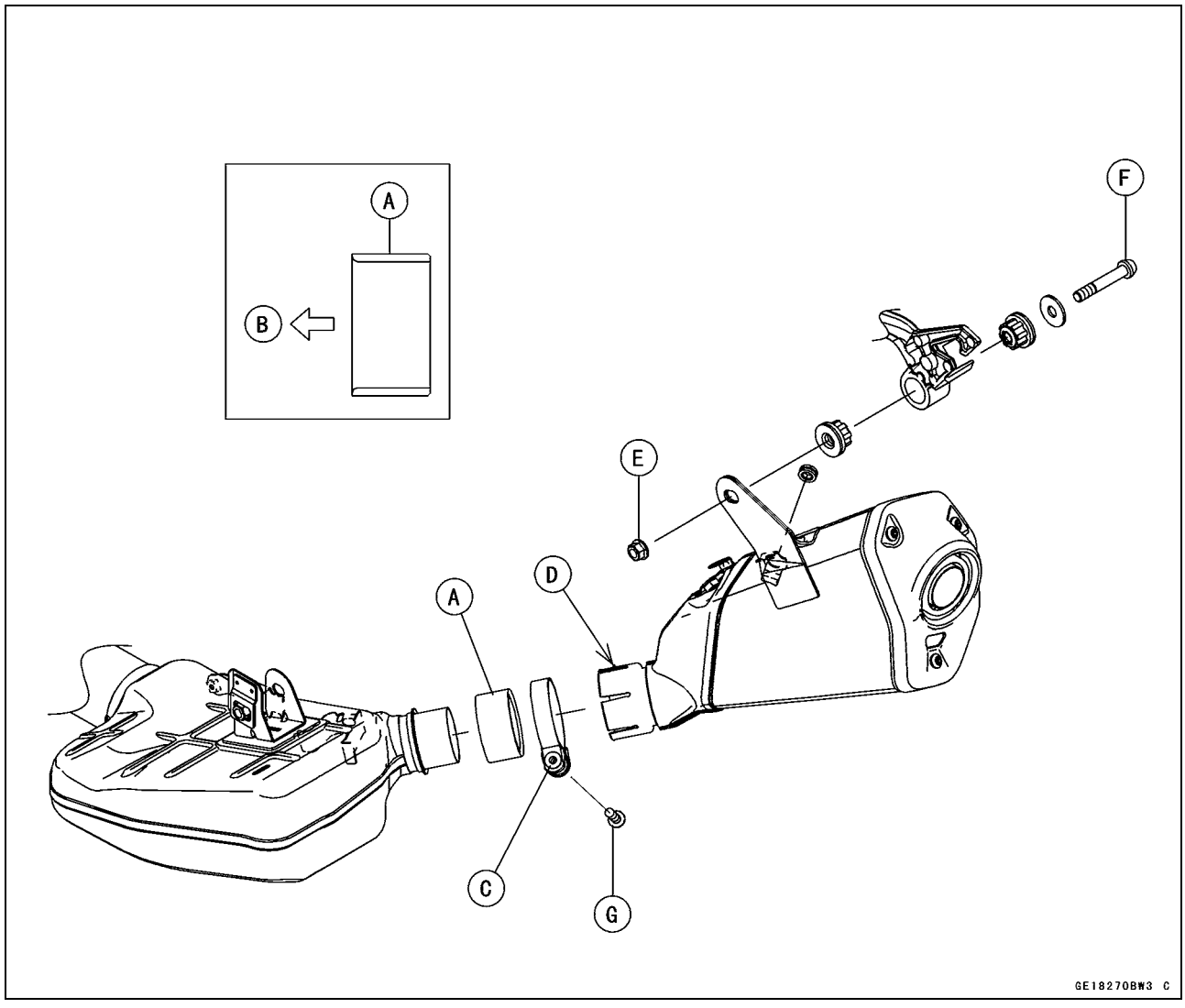

- Thoroughly warm up the engine, wait until the engine cools down, retighten all the bolts and nuts.
- Check that the pads [A] are in place on the muffler body cover.

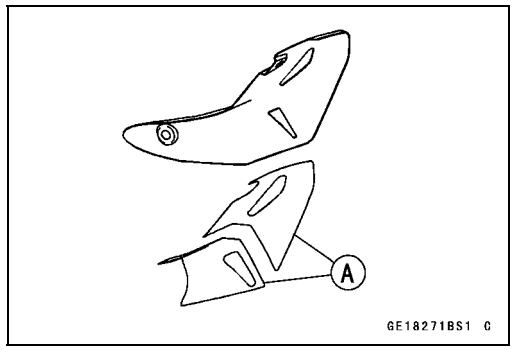

- Install the dampers [A], collars [B].
- Tighten the muffler cover bolt.
  L = 27 mm (1.06 in.) [C]
  L = 14 mm (0.55 in.) [D]

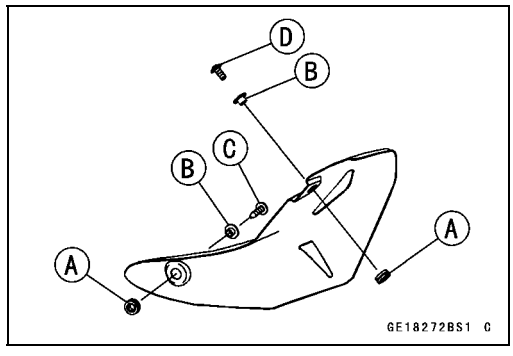

Muffler

Exhaust Pipe Removal

- Remove:
  Radiator (see Radiator and Radiator Fan Removal in the Cooling System)
  Muffler Body (see Muffler Body Removal)
  Oxygen Sensor (see Oxygen Sensor Removal in the Electrical System chapter)
- Support the premuffler chamber with the suitable stand [A].
- Remove the premuffler chamber mounting bolt [B].

- Remove:
  Exhaust Pipe Holder Nuts [A]
  Exhaust Pipe (Premuffler Chamber) [B]

Exhaust Pipe Installation

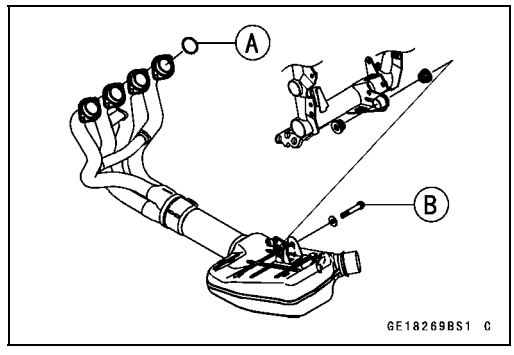

- Replace the exhaust pipe gaskets [A] with new ones.
- Apply grease to the exhaust pipe gaskets and install them.
- Install the exhaust pipe.
- Tighten the premuffler chamber mounting bolt [B].

Torque - Premuffler Chamber Mounting Bolt: 34 N·m (3.5 kgf·m, 25 ft·lb)

- Tighten the exhaust pipe holder nuts.
- Install the removed parts (see appropriate chapters).
- Thoroughly warm up the engine, wait until the engine cools down, retighten all the bolts and nuts.

Clutch

Table of Contents

Exploded View 6-2
Specifications 6-4
Special Tool and Sealant 6-5
Clutch Lever and Cable 6-6
Clutch Lever Free Play Inspection 6-6
Clutch Lever Free Play Adjustment 6-6
Clutch Cable Removal 6-6
Clutch Cable Installation 6-6
Clutch Cable Lubrication 6-6
Clutch Lever Assembly Installation 6-6
Clutch Lever and Cable 6-7
Clutch Lever Removal 6-7
Clutch Lever Installation 6-7
Clutch Lever Position Adjustment 6-8
Clutch Cover 6-9
Clutch Cover Removal 6-9
Clutch Cover Installation 6-9
Release Shaft Removal 6-9
Release Shaft Installation 6-10
Clutch Cover Disassembly 6-10
Clutch Cover Assembly 6-11
Clutch 6-12
Clutch Removal 6-12
Clutch Installation 6-13
Clutch Plate Assembly Length Inspection 6-16
Clutch Plate Assembly Length Adjustment 6-16
Clutch Plate, Wear, Damage Inspection 6-17
Clutch Plate Warp Inspection 6-17
Clutch Housing Finger Inspection 6-17
Clutch Housing Spline Inspection 6-17
Clutch Pressure Plate and Clutch Hub Inspection 6-18
Clutch Spring Inspection 6-18

Exploded View

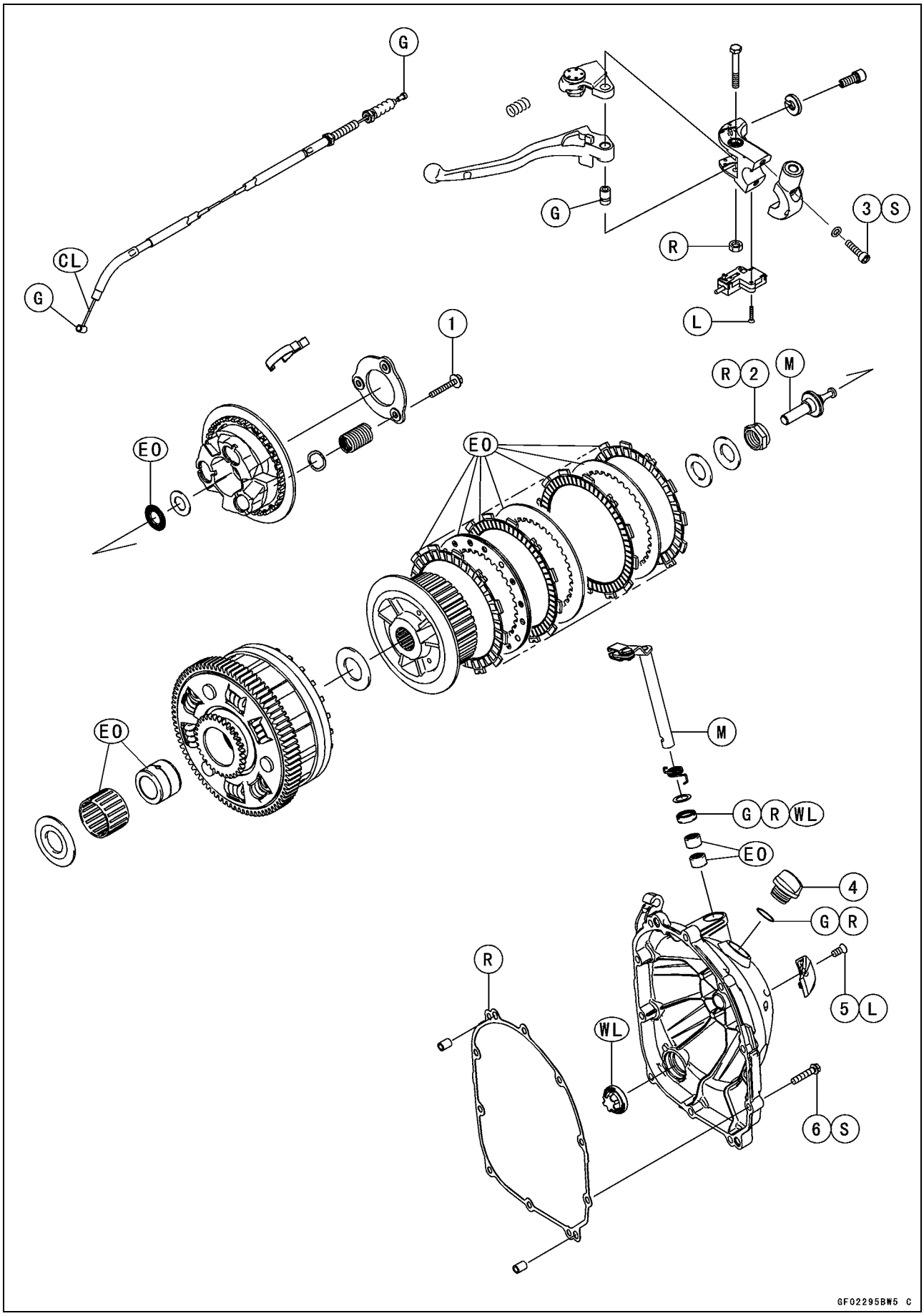

Exploded View

No.	Fastener	Torque			Remarks
		N·m	kgf·m	ft·lb	
1	Clutch Spring Bolts	8.8	0.90	78 in·lb	
2	Clutch Hub Nut	135	13.8	100	R
3	Clutch Lever Clamp Bolts	11	1.1	97 in·lb	S
4	Oil Filler Plug	Hand -tighten	–	–	
5	Clutch Cover Plate Bolt	4.0	0.41	35 in·lb	L
6	Clutch Cover Bolts	12	1.2	106 in·lb	S

CL: Apply cable lubricant.
EO: Apply engine oil.
G: Apply grease.
L: Apply a non-permanent locking agent.
M: Apply molybdenum disulfide grease.
R: Replacement Parts
S: Follow the specified tightening sequence.
WL: Apply soap and water solution or rubber lubricant.

6-4 CLUTCH

Specifications

Item	Standard	Service Limit
Clutch Lever and Cable		
Clutch Lever Position	5-way adjustable (to suit rider)	– – –
Clutch Lever Free Play	2 ~ 3 mm (0.08 ~ 0.12 in.)	– – –
Clutch		
Clutch Plate Assembly Length	(Reference) 45.6 ~ 46.4 mm (1.80 ~ 1.83 in.)	– – –
Friction Plate Thickness	2.72 ~ 2.88 mm (0.107 ~ 0.113 in.)	2.6 mm (0.10 in.)
Friction and Steel Plate Warp	0.15 mm (0.0059 in.) or less	0.3 mm (0.01 in.)

Special Tool and Sealant

Clutch Holder:
57001-1243

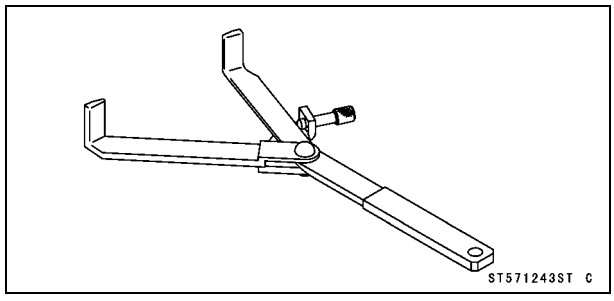

Liquid Gasket, TB1211F:
92104-0004

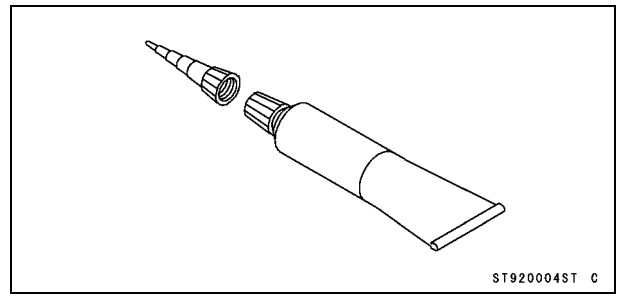

Clutch Lever and Cable

Clutch Lever Free Play Inspection

- Refer to the Clutch Operation Inspection in the Periodic Maintenance chapter.

Clutch Lever Free Play Adjustment

- Refer to the Clutch Operation Inspection in the Periodic Maintenance chapter.

Clutch Cable Removal

- Remove:
  Meter Cover (see Upper Fairing Removal in the Frame chapter)
  Right Middle Fairing (see Middle Fairing Removal in the Frame chapter)
- Slide the dust cover [A] at the clutch cable lower end out of place.
- Loosen the nuts [B], and slide the lower end of the clutch cable to give the cable plenty of play.

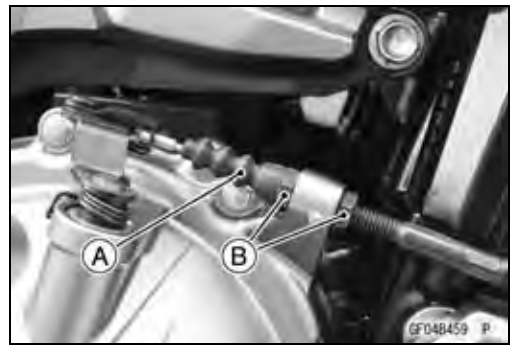

- Loosen the locknut [A] and screw in the adjuster [B].
- Line up the slots [C] in the clutch lever, locknut and adjuster, and then free the cable from the lever.
- Free the clutch inner cable tip from the clutch release lever.
- Remove the clutch cable out of the frame.

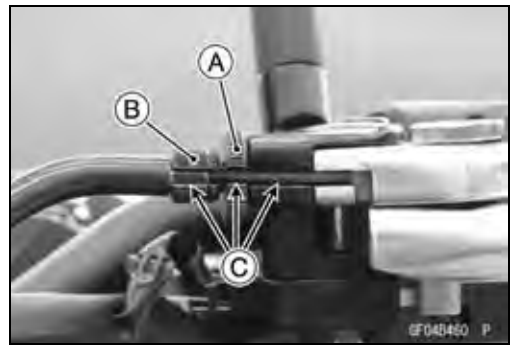

Clutch Cable Installation

- Run the clutch cable correctly (see Cable, Wire, and Hose Routing section in the Appendix chapter).
- Adjust the clutch cable (see Clutch Operation Inspection in the Periodic Maintenance chapter).
- Install the removed parts (see appropriate chapters).

Clutch Cable Lubrication

- Refer to the Chassis Parts Lubrication in the Periodic Maintenance chapter.

Clutch Lever Assembly Installation

- Install the clutch lever so that the mating surface [A] of the clutch lever clamp is aligned with the punch mark [B].
- Tighten the upper clamp bolt first, and then the lower clamp bolt. There will be a gap at the lower part of the clamp after tightening.

Torque - Clutch Lever Clamp Bolts: 11 N·m (1.1 kgf·m, 97 in·lb)

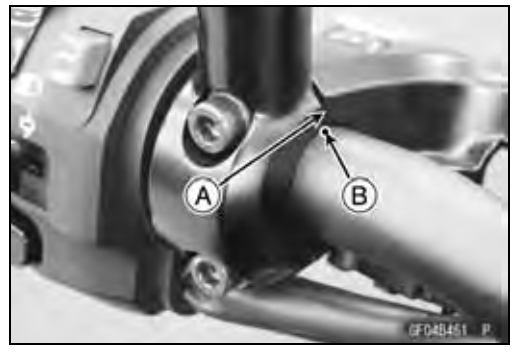

Clutch Lever and Cable

Clutch Lever Removal

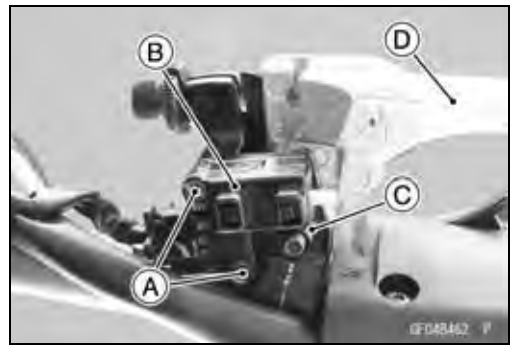

- Remove the upper end of the clutch cable (see Clutch Cable Removal).
- Remove:
  Starter Lockout Switch Screws [A]
  Starter Lockout Switch [B]
  Clutch Lever Pivot Locknut [C]
  Clutch Lever Pivot Bolt
  Clutch Lever [D]

Clutch Lever Installation

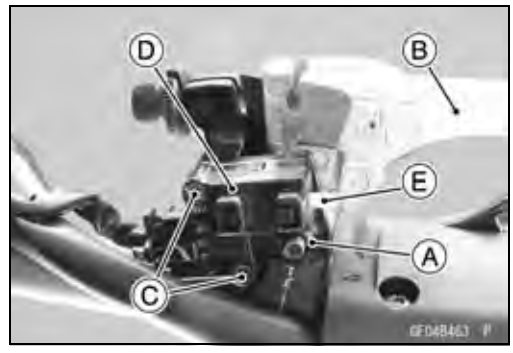

⚠ WARNING

If the starter lockout switch pin has been damaged the starter lockout system will not work properly. This allows the motorcycle to be started in gear with the clutch lever released (clutch engaged), creating sudden forward movement that can result in an accident or injury.
Check that the starter lockout switch operates properly when installing the clutch lever.

- Apply a silicone grease to the clutch lever collar.
- Replace the clutch lever pivot locknut [A] with a new one.
- Install the clutch lever [B] and clutch lever pivot bolt.
- Tighten the clutch lever locknut securely.
- Apply a non-permanent locking agent to the starter lockout switch screws [C].
- Install the starter lockout switch [D].

○Take care not to damage a pin [E] when installing the starter lockout switch.

- Tighten the starter lockout switch screws securely.
- Install the upper end of the clutch cable (see Clutch Cable Installation).
- Adjust the clutch cable (see Clutch Operation Inspection in the Periodic Maintenance chapter).
- Check that the pin of the starter lockout switch moves smoothly.

⚠ WARNING

Too much cable play can prevent clutch disengagement and cause an accident resulting in serious injury or death. When adjusting the clutch or replacing the cable, be sure the upper end of the clutch outer cable is fully seated in its fitting, or it could slip into place later, creating enough cable play to prevent clutch disengagement.

Clutch Lever and Cable

Clutch Lever Position Adjustment

The adjuster has 5 positions so that the clutch lever position can be adjusted to suit the operator's hand.

● Push the lever forward and turn the adjuster [A] to align the number with the mark [B] on the lever holder.

○ The distance from the grip to the lever is minimum at number 5 and maximum at number 1.

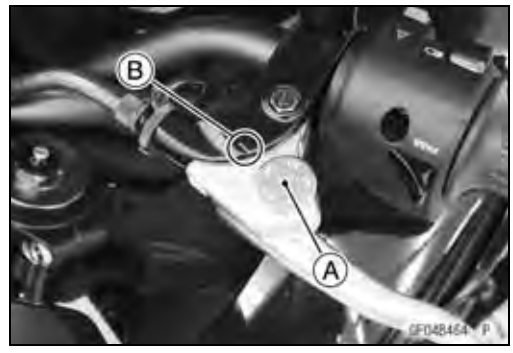

Clutch Cover

Clutch Cover Removal

- Drain the engine oil (see Engine Oil Change in the Periodic Maintenance chapter).
- Disconnect the clutch cable lower end (see Clutch Cable Removal).
- Remove:
  Right Lower Fairing (see Lower Fairing Removal in the Frame chapter)
  Clutch Cover Bolts [A]

- Turn the release lever [A] counterclockwise as shown, and remove the clutch cover [B].
  About 90° [C]

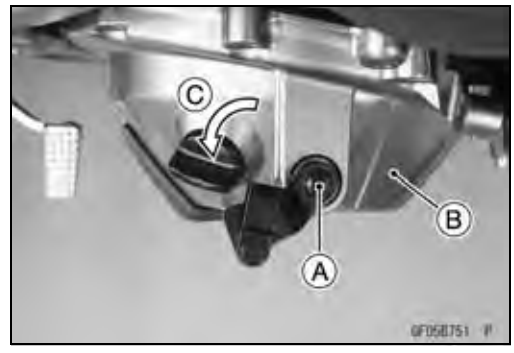

Clutch Cover Installation

- Using a high flash-point solvent, clean off any oil or dirt that may be on the liquid gasket coating area. Dry them with a clean cloth.
- Apply liquid gasket to the area [A] where the mating surface of the crankcase touches the clutch cover gasket.

  Sealant - Liquid Gasket, TB1211F: 92104-0004

- Be sure to dowel pins [B] are in position.
- Replace the clutch cover gasket with a new one and install it.

- Install the clutch cover [A]
- Tighten the clutch cover bolt following the specified tightening sequence [1 ~ 13].

  Torque - Clutch Cover Bolts: 12 N·m (1.2 kgf·m, 106 in·lb)

- Install the removed parts (see appropriate chapters).

Release Shaft Removal

NOTICE
Do not remove the clutch release lever and shaft assembly unless it is absolutely necessary. If removed, the oil seal replacement may be required.

- Remove the clutch cover (see Clutch Cover Removal).
- Pull the release lever and shaft assembly [A] straight out of the clutch cover.

Clutch Cover

Release Shaft Installation

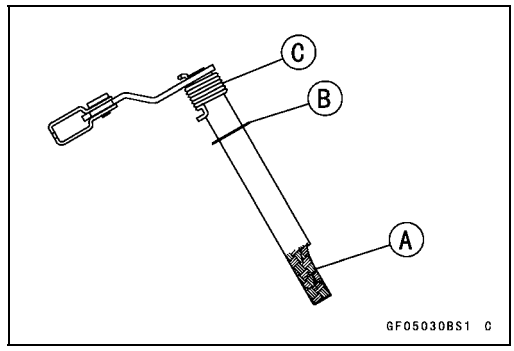

- Apply grease to the oil seal lips on the upper ridge of the clutch cover.
- Apply engine oil to the needle bearings in the hole of the clutch cover.
- Apply molybdenum disulfide grease to the pusher-holding portion [A] on the release shaft.
- Install the washer [B] and spring [C].
- Insert the release shaft straight into the upper hole of the clutch cover.

NOTICE
When inserting the release shaft, be careful not to remove the spring of the oil seal.

- Fit the spring [A] as shown.
  Release Shaft [B]
  Clutch Cover [C]

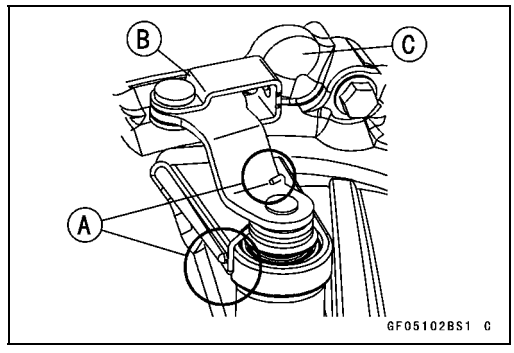

Clutch Cover Disassembly

- Remove:
  Release Lever and Shaft Assembly (see Release Shaft Removal)
  Oil Filler Plug [A]
  Oil Seal [B]
  Needle Bearing [C]

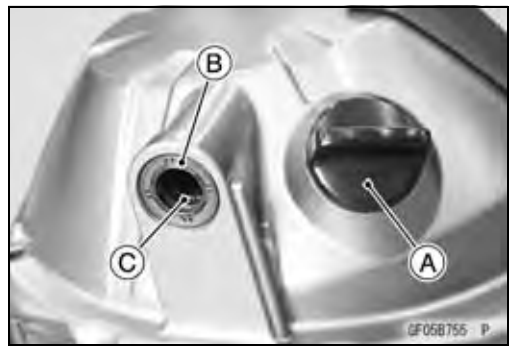

- If necessary, remove the clutch cover plate bolt [A] and the clutch cover plate [B].

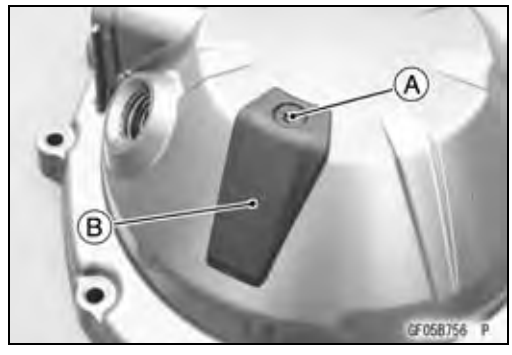

Clutch Cover

● Remove:
Needle Bearing [A]
Oil Level Inspection Window [B]

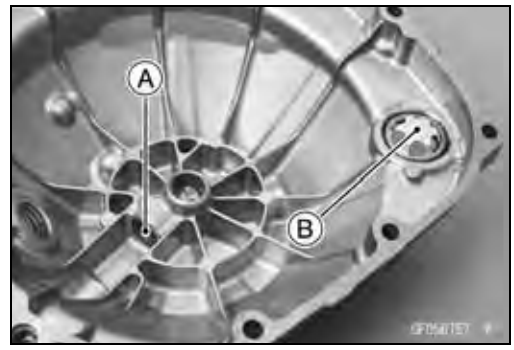

Clutch Cover Assembly

● Replace the needle bearings and oil seal with new ones.

NOTE

○*Install the needle bearings so that the manufacture's mark face out.*

● Apply soap and water solution to the oil seal.
● Install the needle bearings [A] and oil seal [B] position as shown.
○Press [C] the needle bearing so that the bearing surface [D] is flush with the housing end [E] of clutch cover.
○Press the oil seal until the bottom.
● Apply grease to the oil seal lips and the inner circumference of the oil seal.

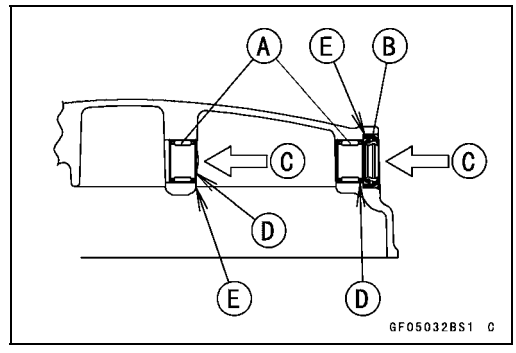

● Apply soap and water solution to the rubber portion [A] of the oil level inspection window.
● Press the oil level inspection window until the bottom so that its projection [B] faces inside of the clutch cover [C].

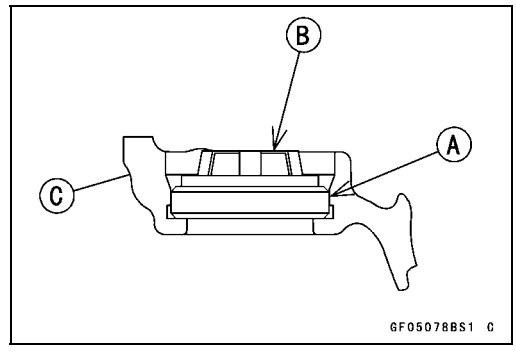

★If the damper removed, apply the non-permanent locking agent to the clutch cover plate bolt.
● Install the clutch cover plate.
● Tighten:

Torque - Clutch Cover Plate Bolt: 4.0 N·m (0.41 kgf·m, 35 in·lb)

● Replace the O-ring [A] of the oil filler plug [B] with a new one.
● Apply grease to the new O-ring.
● Tighten:

Torque - Oil Filler Plug: Hand-tighten

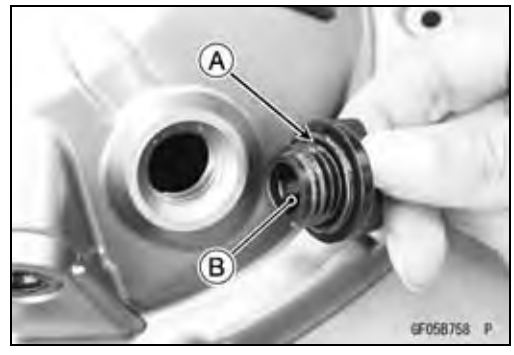

Clutch

Clutch Removal

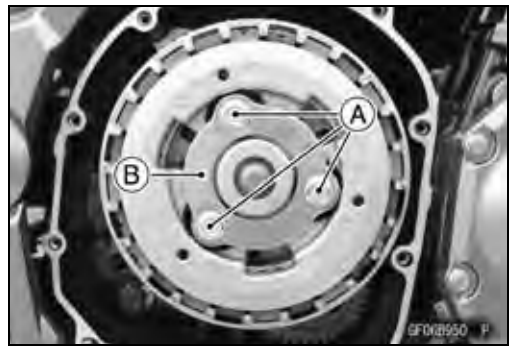

- Remove the clutch cover (see Clutch Cover Removal).
- Loosen the three clutch spring bolts [A] alternately with little by little (1/4 turn at a time) to prevent tilting the clutch stopper plate [B].

NOTICE
Do not loosen the one or two clutch stopper bolt at once to prevent clutch stopper plate from warpage by the spring force.

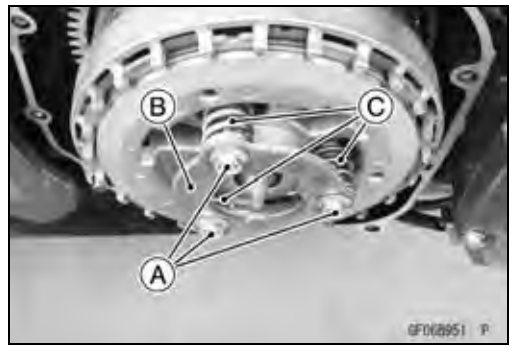

- Remove:
  Clutch Spring Bolts [A]
  Clutch Stopper Plate [B]
  Clutch Springs [C]
- Visually inspect the clutch stopper plate.

★If the clutch stopper plate is warped, replace it with a new one.

- Remove:
  Spring Seats [A]
  Clutch Pressure Plate [B] (with Shim, Bearing and Pusher [C])
  Friction Plates and Steel Plates

- Hold the sub clutch hub [A] steady with the clutch holder [B], and remove the nut [C] and washers.

Special Tool - Clutch Holder: 57001-1243

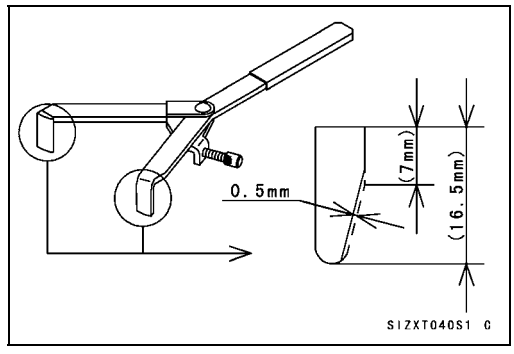

○Use the clutch holder with sharpened hook nose by grinding.

Special Tool - Clutch Holder: 57001-1243

○Grind the hook nose by 0.5 mm (0.02 in.) as shown.

Clutch

- Remove:
  Clutch Hub [A]
  Spacer [B]

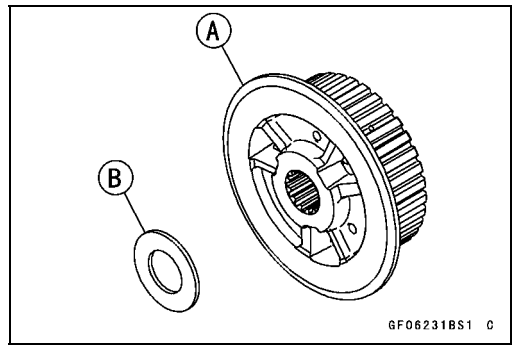

- Using the two 4 mm (0.16 in.) bolts [A], pull out the sleeve [B], needle bearing [C] and clutch housing [D].
- Remove the spacer.

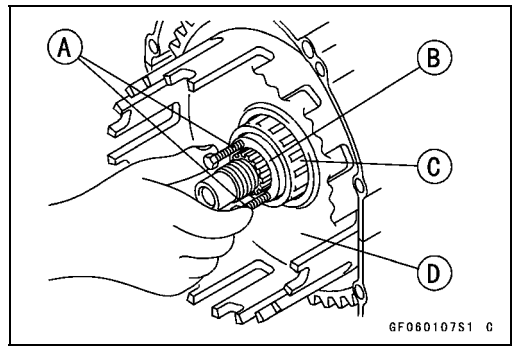

Clutch Installation

- Install the spacer [A] so that the tapered side [B] faces inward.

- Engage the clutch housing gear [A] and oil pump drive gear [B] with the crankshaft primary gear [C] and oil pump drive gear [D].

- Apply engine oil to the sleeve [A] and needle bearing [B].
- Install the sleeve so that the holes face outward.
- Install:
  Needle Bearing
  Spacer [C]

Clutch

● Install:
Clutch Hub
Washer [A]
● Install the washer [B] so that the “OUT SIDE” [C] mark faces outward.

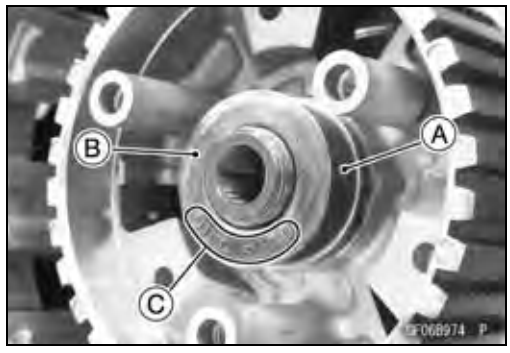

● Replace the clutch hub nut [A] with a new one.
● Hold the sub clutch hub [B] steady with the clutch holder [C], and tighten the clutch hub nut.

Special Tool - Clutch Holder: 57001-1243

Torque - Clutch Hub Nut: 135 N·m (13.8 kgf·m, 100 ft·lb)

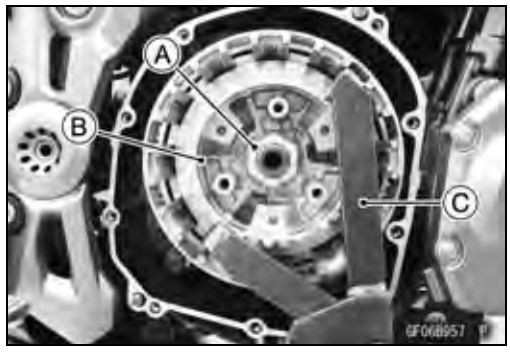

● Install the friction plates [A] [B] and steel plates [C] alternately as shown.
Friction Plates with large lining blocks [A]
Friction Plates with small lining blocks [B]
Thick Steel Plate [D]

NOTICE
If new dry friction plates and steel plates are installed, apply engine oil to the surfaces of each plate to avoid clutch plate seizure.

○Install the last friction plate and steel plate later with the clutch pressure plate.

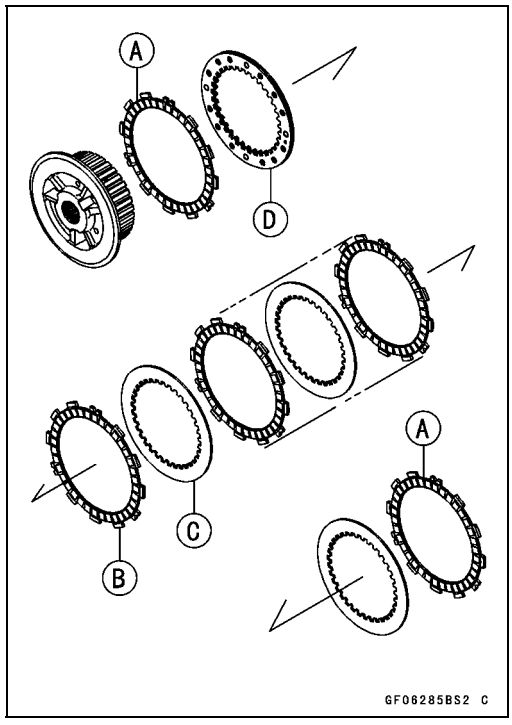

● Apply molybdenum disulfide grease to the pusher end [A].
● Install the bearing [B] and shim [C] to the pusher.
● Install the pusher to the drive shaft [D] direction as shown.

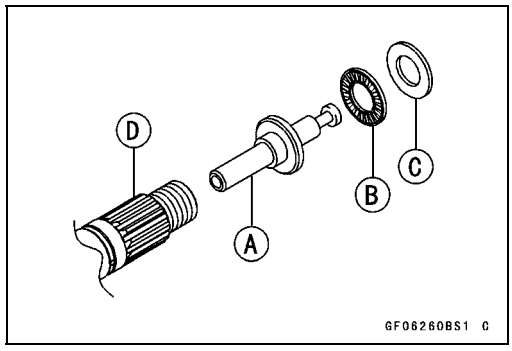

Clutch

● Put the last friction plate [A] and steel plate [B] on the clutch pressure plate [C] and install them.

● Install the last friction plate so that the tangs [A] fit into the grooves in the housing as shown.

NOTE

○*Make sure that the clutch pressure plate is installed without a gap.*

● Be sure to install the spring seats [A] on the clutch pressure plate.

● Install:
Clutch Springs [A]
Clutch Stopper Plate [B]

● Tighten the three clutch spring bolts [C] by hand until they just begin to press each clutch spring.

○Hold the clutch pressure plate by hand while tightening the clutch stopper bolts.

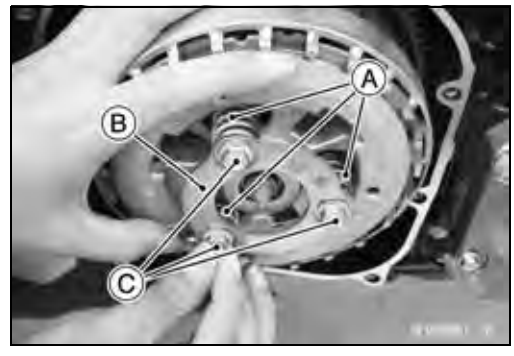

● Tighten the three clutch spring bolts [A] alternately with little by little (1/4 turn at a time) to prevent tilting the clutch stopper plate [B].

NOTICE
Do not tighten the one or two clutch stopper bolt at once to prevent the clutch stopper plate from warpage by the spring force.

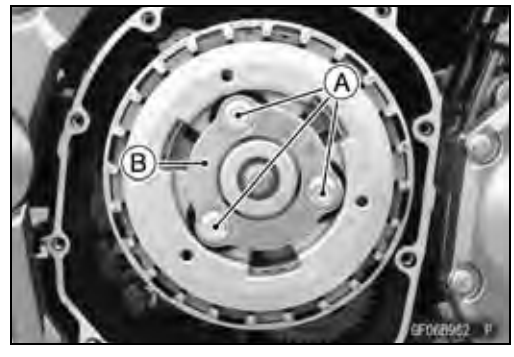

● Tighten:

Torque - Clutch Spring Bolts: 8.8 N·m (0.90 kgf·m, 78 in·lb)

● Install the clutch cover (see Clutch Cover Installation).

Clutch

Clutch Plate Assembly Length Inspection

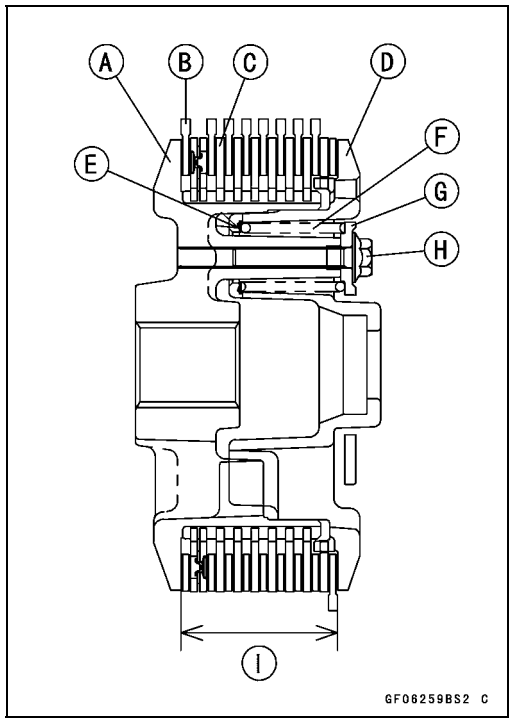

- Assemble the following parts.
  Clutch Hub [A]
  Friction Plates [B]
  Steel Plates [C]
  Clutch Pressure Plate [D]
  Spring Seats [E]
  Clutch Springs [F]
  Clutch Stopper Plate [G]
  Clutch Spring Bolts [H]

Torque - Clutch Spring Bolts: 8.8 N·m (0.90 kgf·m, 78 in·lb)

- Measure the clutch plate assembly length [I].

Clutch Plate Assembly Length
45.6 ~ 46.4 mm (1.80 ~ 1.83 in.)

★If the length is not within the specified range, adjust the length (see Clutch Plate Assembly Adjustment).

Clutch Plate Assembly Length Adjustment

- Inspect the clutch plate assembly length, and then replace the steel plate(s) which brings the length within the specified range.
- Remove:
  Clutch Spring Bolts
  Clutch Stopper Plates
  Clutch Springs
  Clutch Pressure Plate
  Spring Seats
- Replace the following steel plate(s).

Thickness	Part Number
2.0 mm (0.079 in.)	13089-1073
2.3 mm (0.091 in.) (STD)	13089-1084
2.6 mm (0.102 in.)	13089-1115

NOTE

○*Do not use the steel plate of 2.0 mm (0.079 in.) and 2.6 mm (0.102 in.) thickness at the same time.*

○*When adjusting the clutch plate assembly, install the steel plate of 2.0 mm (0.079 in.) or 2.6 mm (0.102 in.) thickness to the second or third from the clutch pressure plate.*

- Install the removed parts, and inspect the clutch plate assembly length.

Torque - Clutch Spring Bolts: 8.8 N·m (0.90 kgf·m, 78 in·lb)

Clutch

Clutch Plate, Wear, Damage Inspection

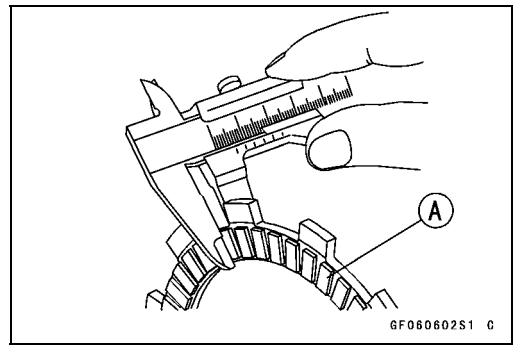

- Visually inspect the friction and steel plates for signs of seizure, overheating (discoloration), or uneven wear.
- Measure the thickness of each friction plate [A] at several points.

★If any plates show signs of damage, or if they have worn past the service limit, replace them with new ones.

Friction Plate Thickness

Standard:	**2.72 ~ 2.88 mm (0.107 ~ 0.113 in.)**
Service Limit:	**2.6 mm (0.10 in.)**

Clutch Plate Warp Inspection

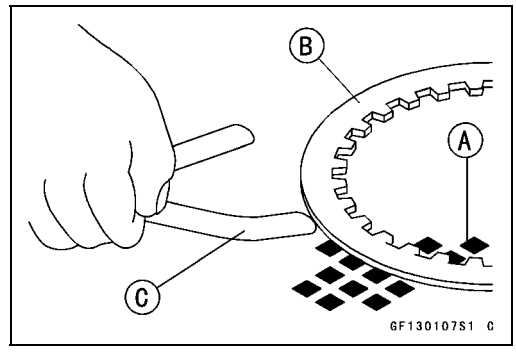

- Place each friction plate or steel plate on a surface plate and measure the gap between the surface plate [A] and each friction plate or steel plate [B] with a thickness gauge [C]. The gap is the amount of friction or steel plate warp.

★If any plate is warped over the service limit, replace it with a new one.

Friction and Steel Plate Warp

Standard:	**0.15 mm (0.0059 in.) or less**
Service Limit:	**0.3 mm (0.01 in.)**

Clutch Housing Finger Inspection

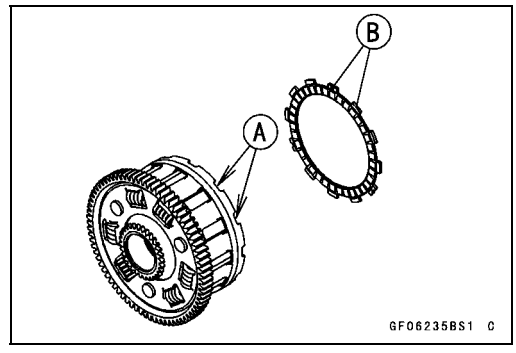

- Visually inspect the clutch housing fingers [A] where the friction plate tangs [B] hit them.

★If they are badly worn or if there are groove cuts where the tangs hit, replace the housing. Also, replace the friction plates if their tangs are damaged.

Clutch Housing Spline Inspection

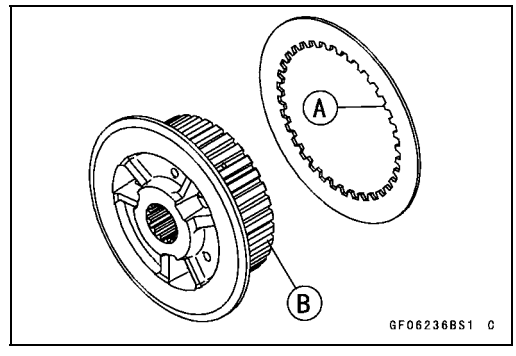

- Visually inspect where the teeth [A] on the steel plates wear against the sub clutch hub splines [B].

★If there are notches worn into the splines, replace the sub clutch hub. Also, replace the steel plates if their teeth are damaged.

Clutch

Clutch Pressure Plate and Clutch Hub Inspection

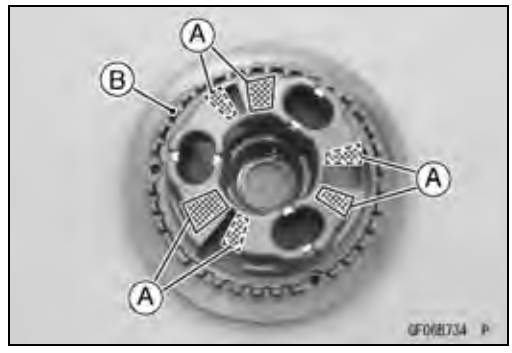

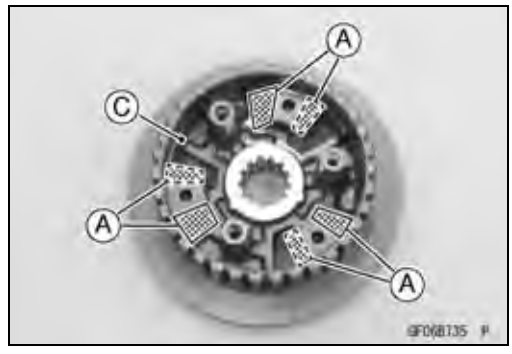

- Visually inspect the contact areas [A] of the clutch pressure plate [B] and clutch hub [C] for damage.

★If the contact areas are damaged replace them with new ones.

Clutch Spring Inspection

★If all the components are good, but the problem still exists, replace the clutch springs (see Clutch Removal and Clutch Installation).

Engine Lubrication System

Table of Contents

Exploded View 7-2
Engine Oil Flow Chart 7-4
Specifications 7-5
Special Tools and Sealants 7-6
Engine Oil and Oil Filter 7-7
  Oil Level Inspection 7-7
  Engine Oil Change 7-7
  Oil Filter Replacement 7-7
Oil Pan 7-8
  Oil Pan Removal 7-8
  Oil Pan Installation 7-8
Oil Screen 7-10
  Oil Screen Removal 7-10
  Oil Screen Installation 7-10
  Oil Screen Cleaning 7-10
Oil Pressure Relief Valve 7-11
  Oil Pressure Relief Valve Removal 7-11
  Oil Pressure Relief Valve Installation 7-11
  Oil Pressure Relief Valve Inspection 7-11
Oil Pump 7-12
  Oil Pump Removal 7-12
  Oil Pump Installation 7-12
  Oil Pump Drive Gear Removal 7-13
  Oil Pump Drive Gear Installation 7-13
Oil Cooler (MY Model) 7-14
  Oil Cooler Removal 7-14
  Oil Cooler Installation 7-14
Oil Pressure Measurement 7-15
  Oil Pressure Measurement 7-15
Oil Pressure Switch 7-16
  Oil Pressure Switch Removal 7-16
  Oil Pressure Switch Installation 7-16
Oil Pipe 7-17
  Oil Pipe Removal 7-17
  Oil Pipe Installation 7-17

Exploded View

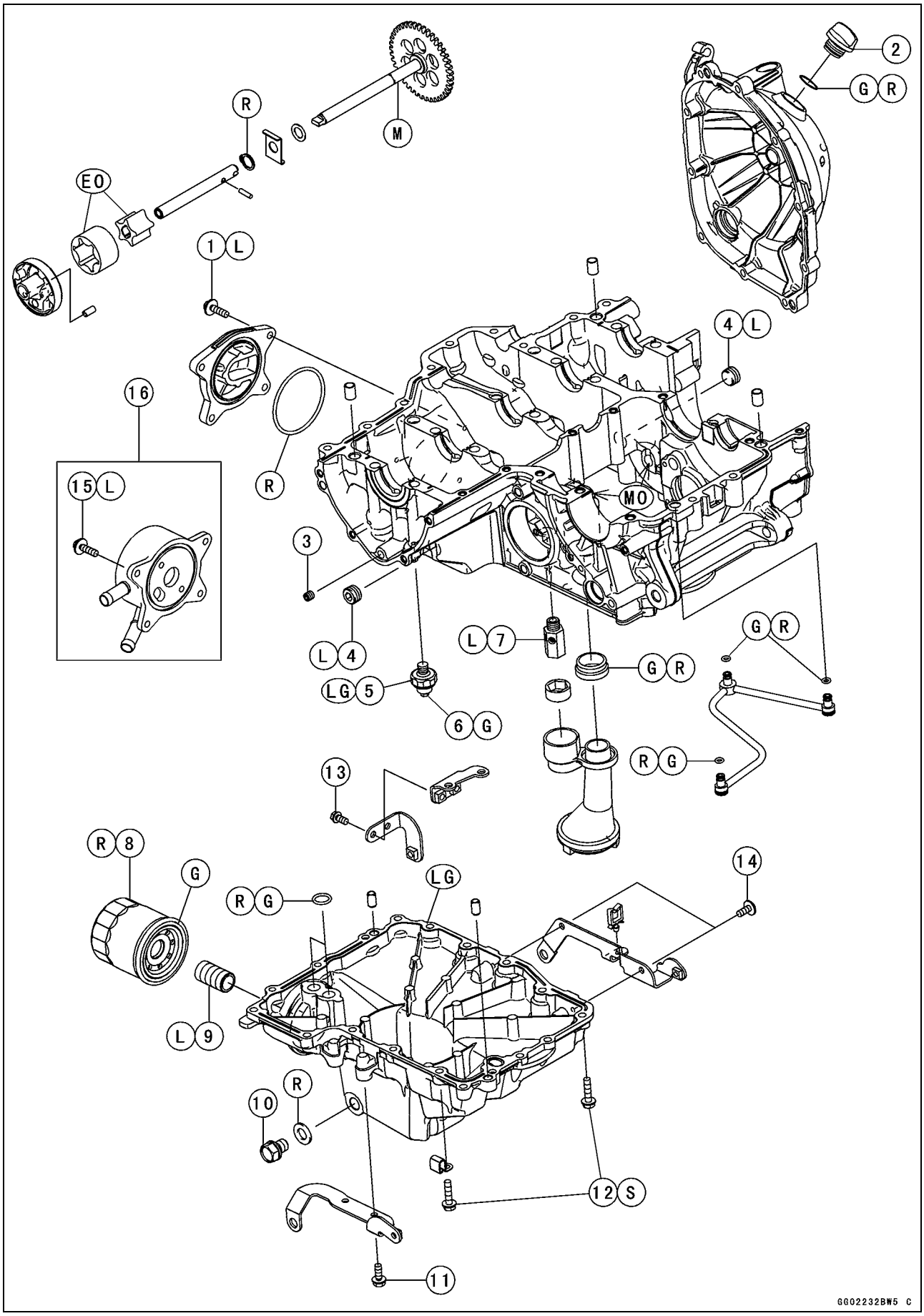

Exploded View

No.	Fastener	Torque			Remarks
		N·m	kgf·m	ft·lb	
1	Oil Passage Cover Bolts	12	1.2	106 in·lb	L
2	Oil Filler Plug	Hand-tighten	–	-	
3	Oil Passage Plug	10	1.0	89 in·lb	
4	Oil Passage Plugs	20	2.0	15	L
5	Oil Pressure Switch	15	1.5	11	LG
6	Oil Pressure Switch Terminal Bolt	2.0	0.20	18 in·lb	G
7	Oil Pressure Relief Valve	15	1.5	11	L
8	Oil Filter	17	1.7	13	G, R
9	Oil Filter Pipe	25	2.5	18	L
10	Engine Oil Drain Bolt	29	3.0	21	
11	Lower Fairing Bracket Bolts, L = 16 mm (0.63 in.)	12	1.2	106 in·lb	
12	Oil Pan Bolts	12	1.2	106 in·lb	S
13	Lower Fairing Bracket Bolts, L = 12 mm (0.47 in.)	6.9	0.70	61 in·lb	
14	Lower Fairing Bracket Bolts, L = 14 mm (0.55 in.)	9.8	1.0	87 in·lb	
15	Oil Cooler Bolts	12	1.2	106 in·lb	L

16. MY Model
EO: Apply engine oil.
G: Apply grease.
L: Apply a non-permanent locking agent.
LG: Apply liquid gasket.
M: Apply molybdenum disulfide grease.
R: Replacement Parts
S: Follow the specified tightening sequence.

Engine Oil Flow Chart

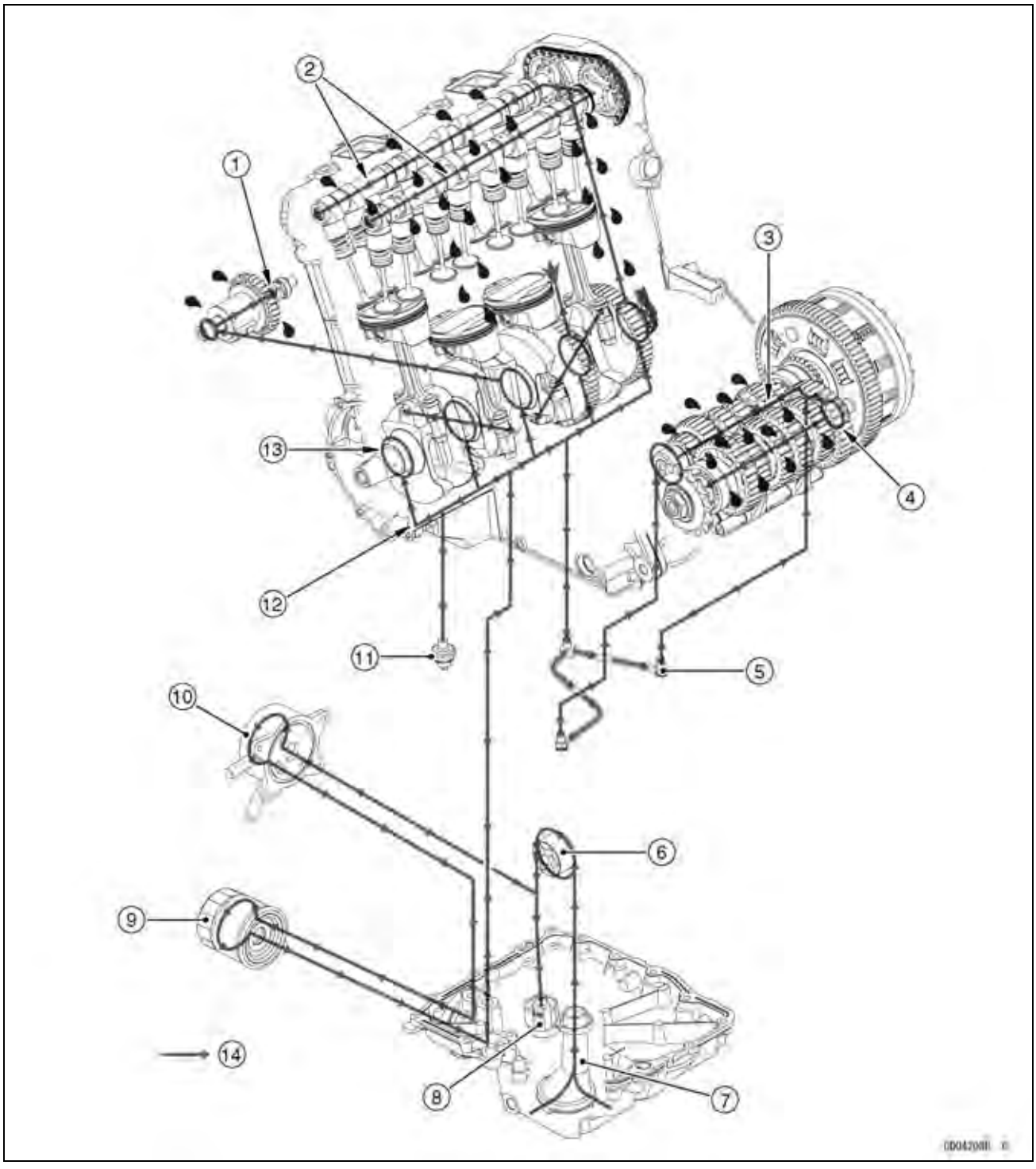

1. Balancer Oil Passage
2. Camshaft Oil Passages
3. Drive Shaft Oil Passage
4. Output Shaft Oil Passage
5. Oil Pipe
6. Oil Pump
7. Oil Screen
8. Oil Pressure Relief Valve
9. Oil Filter
10. Oil Cooler (MY Model)
11. Oil Pressure Switch
12. Main Oil Passage
13. Crankshaft Oil Passage
14. Engine Oil

Specifications

Item	Standard
Engine Oil	
Type	API SG, SH, SJ, SL or SM with JASO MA, MA1 or MA2
Viscosity	SAE 10W-40
Capacity	3.2 L (3.4 US qt) (When filter is not removed.)
	3.6 L (3.8 US qt) (When filter is removed.)
	4.0 L (4.2 US qt) (When engine is completely dry.)
Level	Between upper and lower level lines (Wait several minutes after idling or running)
Oil Pressure Measurement	
Oil Pressure	About 295 kPa (3.01 kgf/cm², 42.8 psi) @4 000 r/min (rpm), Oil Temperature 50°C (122°F)

Special Tools and Sealants

Outside Circlip Pliers:
57001-144

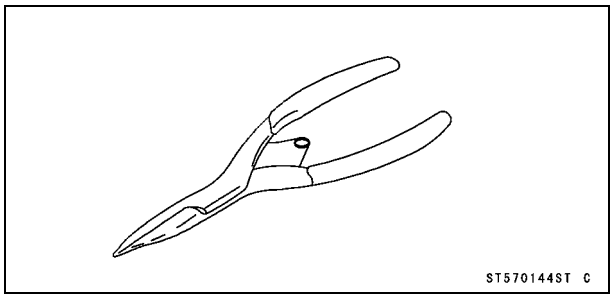

Oil Pressure Gauge, 10 kgf/cm²:
57001-164

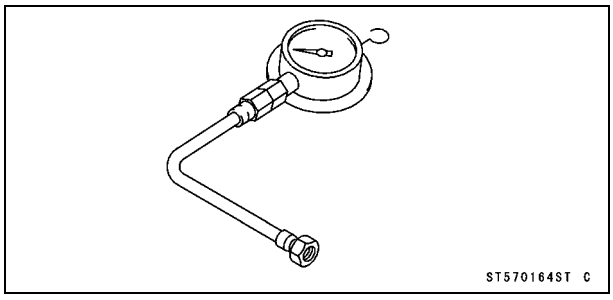

Oil Pressure Gauge Adapter, PT3/8:
57001-1233

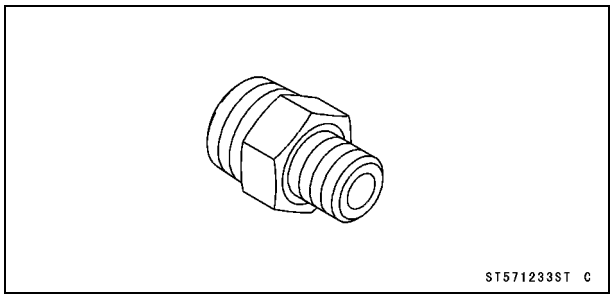

Liquid Gasket, TB1211:
56019-120

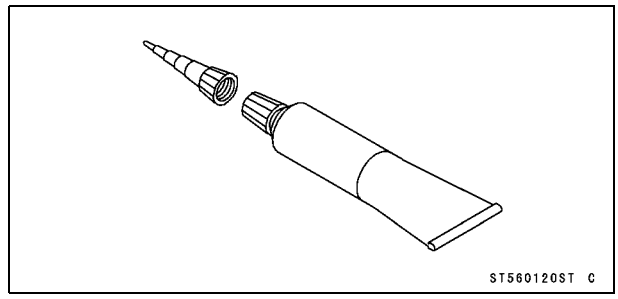

Liquid Gasket, TB1207B:
92104-2068

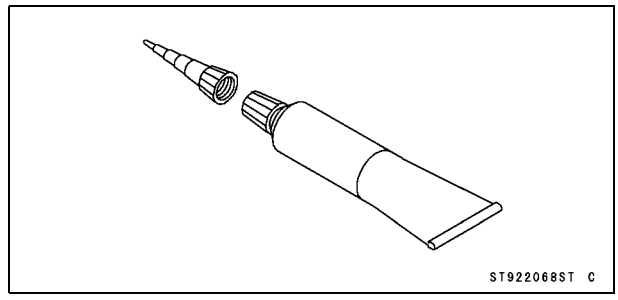

Engine Oil and Oil Filter

⚠ WARNING

Vehicle operation with insufficient, deteriorated, or contaminated engine oil will cause accelerated wear and may result in engine seizure, accident, and injury. Check the oil level before each use and change the oil and filter according to the periodic maintenance chart.

Oil Level Inspection

● Check that the engine oil level is between the upper [A] and lower [B] levels in the oil level inspection window.

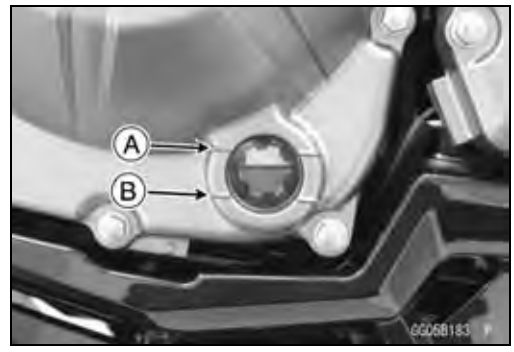

NOTE

○*Situate the motorcycle so that it is perpendicular to the ground.*

○*If the motorcycle has just been used, wait several minutes for all the oil to drain down.*

○*If the oil has just been changed, start the engine and run it for several minutes at idle speed. This fills the oil filter with oil. Stop the engine, then wait several minutes until the oil settles.*

NOTICE

Racing the engine before the oil reaches every part can cause engine seizure.
If the engine oil gets extremely low or if the oil pump or oil passages clog up or otherwise do not function properly, the red warning indicator light (LED) and oil pressure warning indicator will light. If it stays on when the engine is running above idle speed, stop the engine immediately and find the cause.

★If the oil level is too high, remove the excess oil, using a syringe or some other suitable device.

★If the oil level is too low, add the correct amount of oil through the oil filler opening. Use the same type and make of oil that is already in the engine.

NOTE

○*If the engine oil type and make are unknown, use any brand of the specified oil to top off the level in preference to running the engine with the oil level low. Then at your earliest convenience, change the oil completely.*

Engine Oil Change

● Refer to the Engine Oil Change in the Periodic Maintenance chapter.

Oil Filter Replacement

● Refer to the Oil Filter Replacement in the Periodic Maintenance chapter.

Oil Pan

Oil Pan Removal

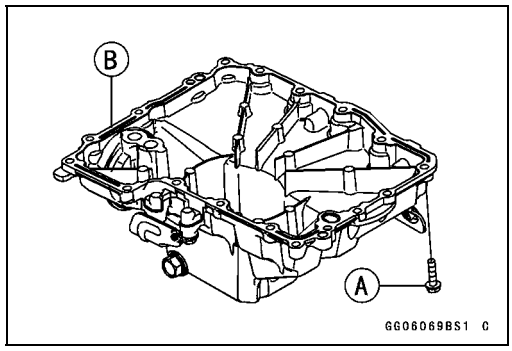

- Remove:
  Exhaust Pipe (see Exhaust Pipe Removal in the Engine Top End chapter)
  Oil Filter (see Oil Filter Replacement in the Periodic Maintenance chapter)
  Oil Pan Bolts [A]
  Clamp
  Oil Pan [B]
- Remove the following parts if necessary.
  Oil Screen (see Oil Screen Removal)
  Oil Pipe (see Oil Pipe Removal)
  Oil Pressure Relief Valve (see Oil Pressure Relief Valve Removal)

Oil Pan Installation

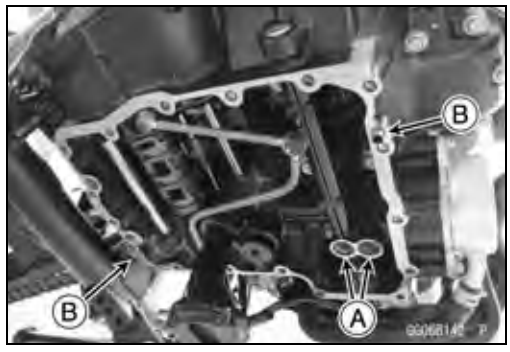

- Using a high flash-point solvent, clean off any oil or dirt that may be on the liquid gasket coating area. Dry them with a clean cloth.
- Install the following parts if removed.
  Oil Pressure Relief Valve (see Oil Pressure Relief Valve Installation)
  Oil Pipe (see Oil Pipe Installation)
  Oil Screen (see Oil Screen Installation)
- Replace the O-rings [A] with new ones.
- Apply grease to the O-rings, and install them.
- Install the dowel pins [B].

- Apply liquid gasket [A] to the mating surface of the oil pan.

Sealant - Liquid Gasket, TB1207B: 92104-2068

NOTE

○*Especially, apply liquid gasket so that it shall be filled up on the grooves [B].*

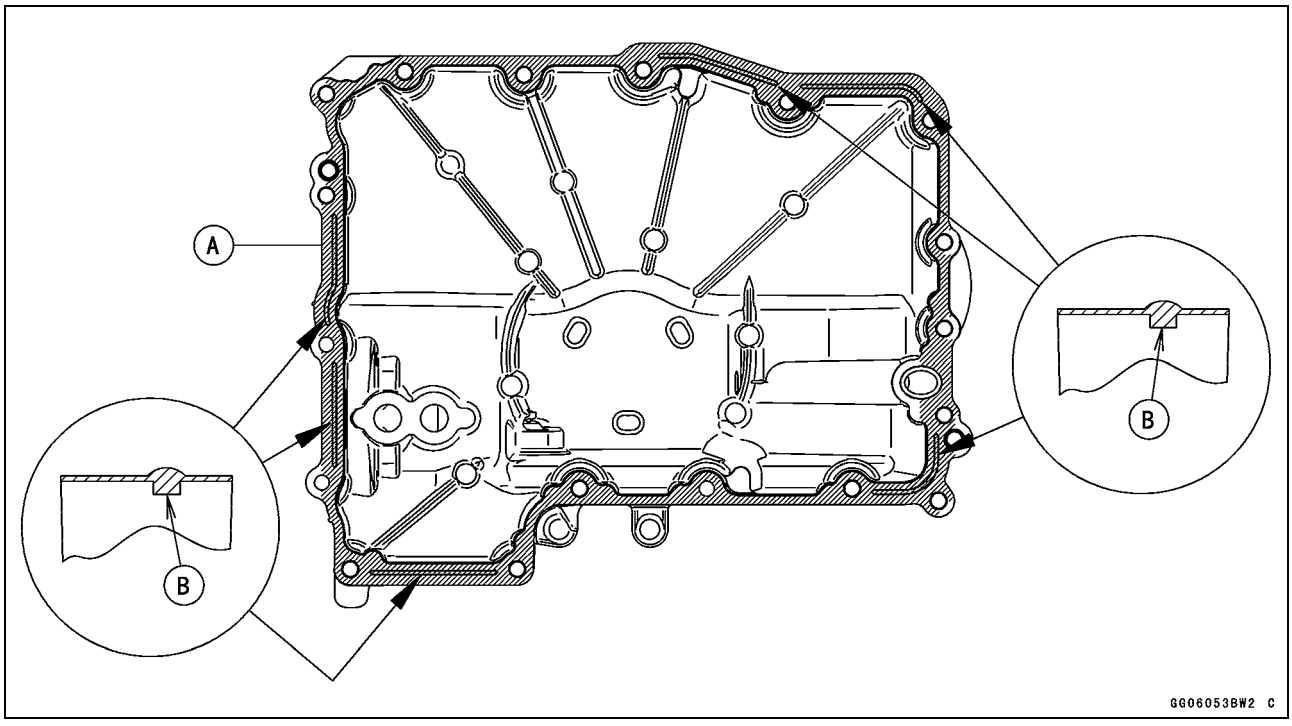

Oil Pan

NOTE

○*Make the application finish within 7 minutes when the liquid gasket to the mating surface of the oil pan is applied.*

○*Moreover fit the oil pan and tighten the bolts just after application of the liquid gasket.*

● Tighten the oil pan bolts following sequence [1 ~ 22].

○Install the oil pan bolt [9] with the clamp [A].

Torque - Oil Pan Bolts: 12 N·m (1.2 kgf·m, 106 in·lb)

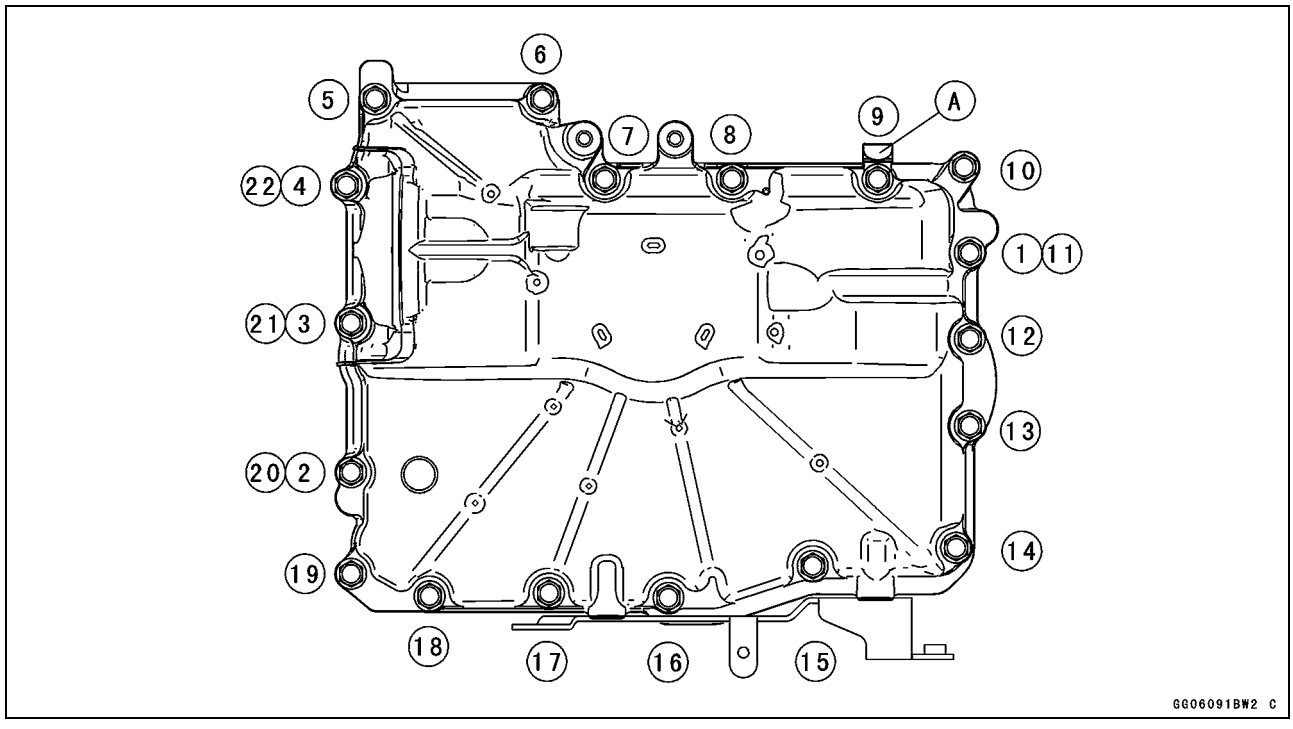

● Install the removed parts (see appropriate chapters).

Oil Screen

Oil Screen Removal

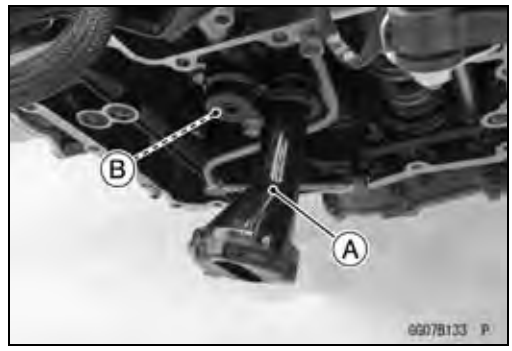

- Remove:
  Oil Pan (see Oil Pan Removal)
  Oil Screen [A]
  Rubber Damper [B]

Oil Screen Installation

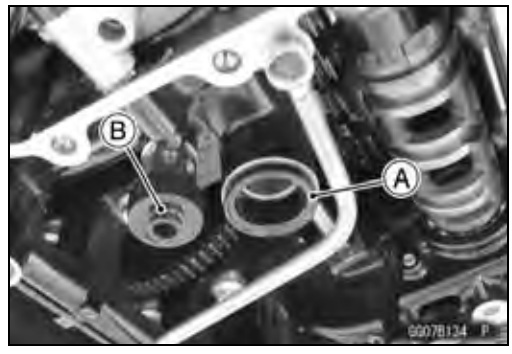

- Clean the oil screen (see Oil Screen Cleaning).
- Replace the O-ring [A] with a new one, and install it.
- Apply grease to the O-ring.
- Install the rubber damper [B] to the oil pressure relief valve.
- Install:
  Oil Screen
  Oil Pan (see Oil Pan Installation)

Oil Screen Cleaning

- Remove the oil screen (see Oil Screen Removal).
- Clean the oil screen with a high flash-point solvent and remove the particles stuck.
- Blow away the particles by applying compressed air [A] from the inside to the outside (from the clean side to the dirty side).

⚠ WARNING

Gasoline and low flash-point solvents can be flammable and/or explosive and cause severe burns. Clean the screen in a well-ventilated area, and take care that there are no sparks or flame anywhere near the working area; this includes any appliance with a pilot light. Do not use gasoline or a low flash-point solvent to clean the screen.

NOTE

○*While cleaning the screen, check for any metal particles that might indicate internal engine damage.*

- Check the screens carefully for any damage.

★If the screen is damaged, replace the oil screen.

Oil Pressure Relief Valve

Oil Pressure Relief Valve Removal

● Remove:
Oil Screen (see Oil Screen Removal)
Oil Pressure Relief Valve [A]

Oil Pressure Relief Valve Installation

● Apply a non-permanent locking agent to the threads of the oil pressure relief valve, and tighten it.

Torque - Oil Pressure Relief Valve: 15 N·m (1.5 kgf·m, 11 ft·lb)

● Install the oil screen (see Oil Screen Installation).

Oil Pressure Relief Valve Inspection

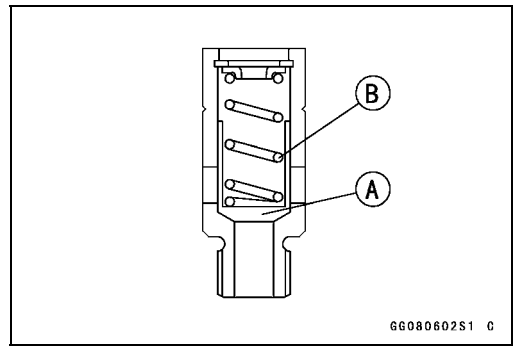

● Check to see if the valve [A] slides smoothly when pushing it in with a wooden or other soft rod, and see if it comes back to its seat by spring [B] pressure.

NOTE

○*Inspect the valve in its assembled state. Disassembly and assembly may change the valve performance.*

★If any rough spots are found during above inspection, wash the valve clean with a high flash-point solvent and blow out any foreign particles that may be in the valve with compressed air.

⚠ WARNING

Gasoline and low flash-point solvents can be flammable and/or explosive and cause severe burns. Clean the oil pressure relief valve in a well-ventilated area, and take care that there are no sparks or flame anywhere near the working area; this includes any appliance with a pilot light. Do not use gasoline or a low flash-point solvent to clean the oil pressure relief valve.

★If cleaning does not solve the problem, replace the oil pressure relief valve as an assembly. The oil pressure relief valve is precision made with no allowance for replacement of individual parts.

Oil Pump

Oil Pump Removal

● Remove:
Water Pump (see Water Pump Removal in the Cooling System chapter)
Oil Pump Cover [A]

● Remove:
Oil (Water) Pump Shaft [A] with Inner Rotor [B]
Outer Rotor [C]

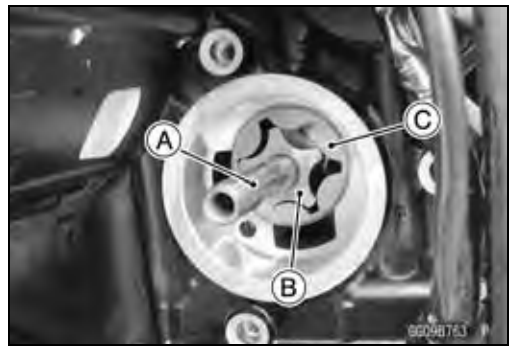

Oil Pump Installation

● Install the outer rotor [A] into the crankcase.

● Apply grease to the pin [A].
● Assemble the pin, inner rotor [B] and oil (water) pump shaft [C].

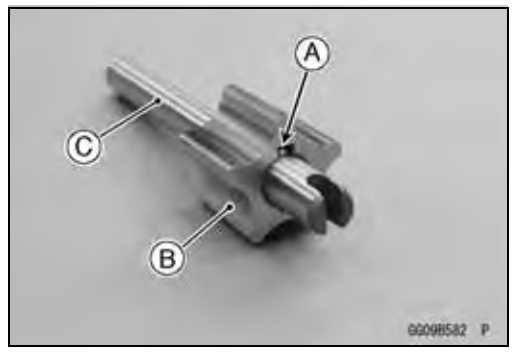

● Turn the pump shaft so that the slot [A] in its shaft fits onto the projection [B] of the pump drive gear shaft.

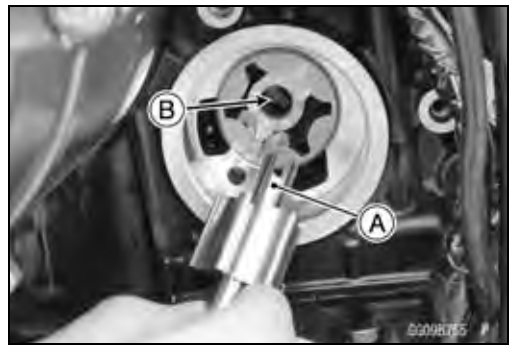

Oil Pump

- Pack grease into the cavity [A] between the inner rotor and outer rotor for improve the oil pump initial priming.
- Install the dowel pin [B].
- Install the oil pump cover [C] so that the dowel pin fits into the hole [D] of the oil pump cover.
- Install the water pump (see Water Pump Installation in the Cooling System chapter).

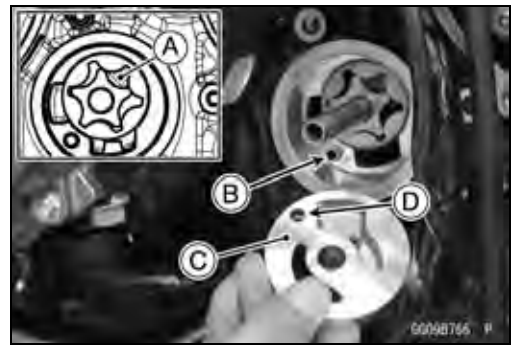

Oil Pump Drive Gear Removal

- Remove:
  Clutch (see Clutch Removal in the Clutch chapter)
  Oil Pan (see Oil Pan Removal)
  Circlip [A] and Washer [B]

  Special Tool - Outside Circlip Pliers: 57001-144

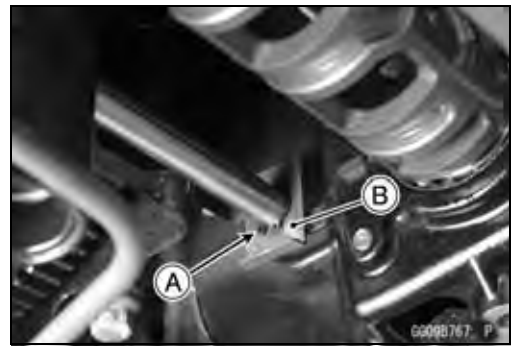

- Remove:
  Oil Pump Drive Gear [A]
  Washer [B]

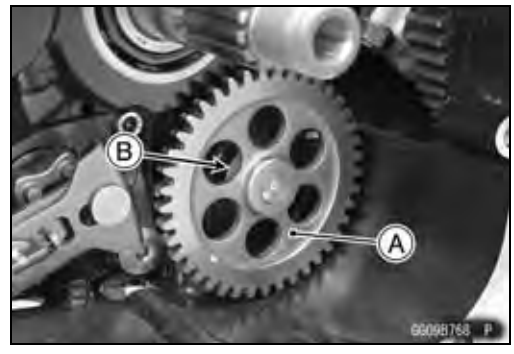

Oil Pump Drive Gear Installation

- Apply molybdenum disulfide oil solution to the hole of the oil pump drive gear shaft in the crankcase.
- Apply molybdenum disulfide grease to the journal portion [A] on the oil pump drive gear shaft [B].
- Install the washer [C] to the shaft.

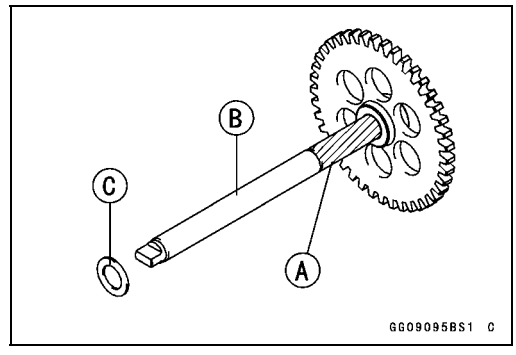

- Replace the circlip [A] with a new one.
- Insert the oil pump drive gear to the lower crankcase.
- Install the washer [B] and circlip.

  Special Tool - Outside Circlip Pliers: 57001-144

- Fit the projection on the shaft and oil (water) pump shaft slot.
- Set the circlip to the original position.

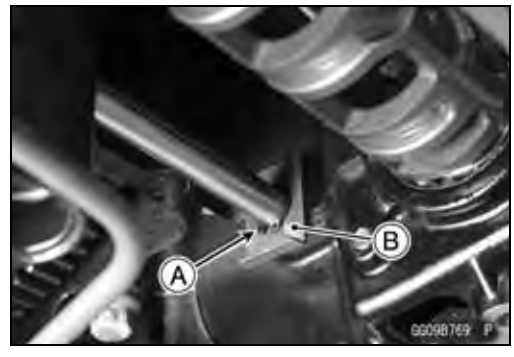

Oil Cooler (MY Model)

Oil Cooler Removal

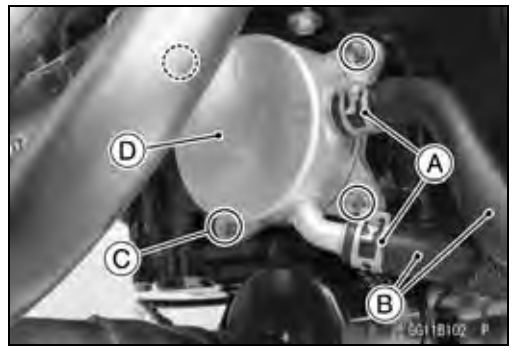

- Remove the lower fairings (see Lower Fairing Removal in the Frame chapter).
- Drain:
  Coolant (see Coolant Change in the Periodic Maintenance chapter)
  Engine Oil (see Engine Oil Change in the Periodic Maintenance chapter)
- Slide the water hose clamps [A].
- Disconnect the water hoses [B].
- Remove:
  Oil Cooler Bolts [C]
  Oil Cooler [D]

Oil Cooler Installation

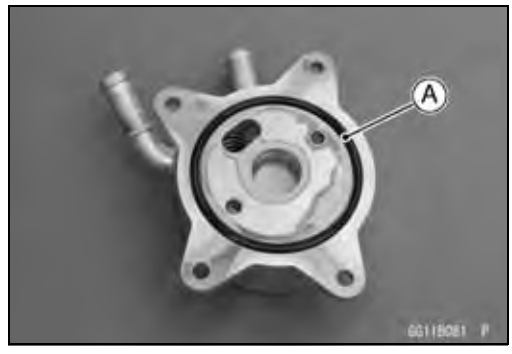

- Replace the O-ring [A] with a new one.
- Apply grease to the O-ring and install it.
- Install the oil cooler.
- Apply a non-permanent locking agent to the threads of the oil cooler bolts.
- Tighten:

Torque - Oil Cooler Bolts: 12 N·m (1.2 kgf·m, 106 in·lb)

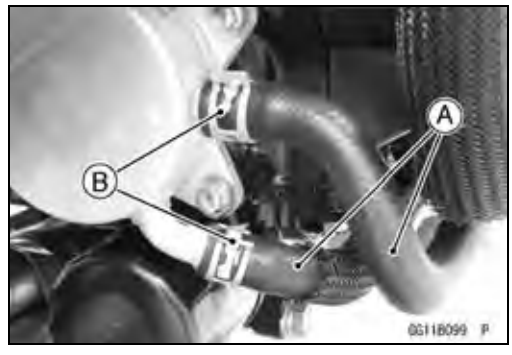

- Install the water hoses [A] and clamps [B] as shown.
- Pour:
  Engine Oil (see Engine Oil Change in the Periodic Maintenance chapter)
  Coolant (see Coolant Change in the Periodic Maintenance chapter)
- Install the lower fairings (see Lower Fairing Installation in the Frame chapter).

Oil Pressure Measurement

Oil Pressure Measurement

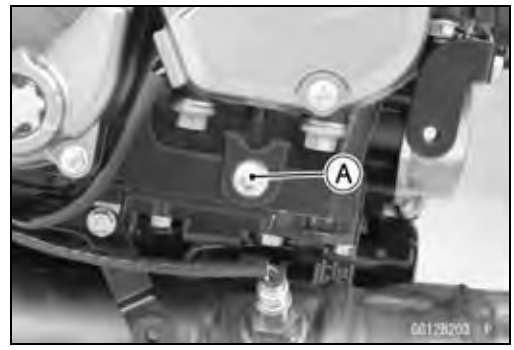

- Remove:
  Right Lower Fairing (see Lower Fairing Removal in the Frame chapter)
  Oil Passage Plug [A]

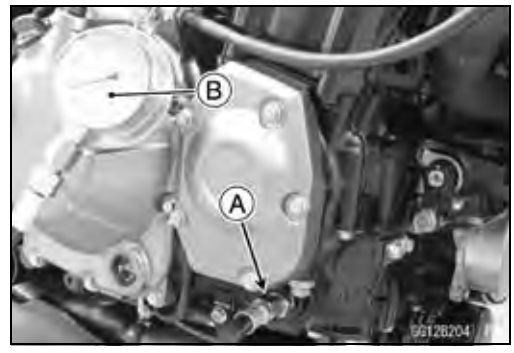

- Attach the adapter [A] and gauge [B] to the plug hole.

Special Tools - Oil Pressure Gauge, 10 kgf/cm²: 57001-164
Oil Pressure Gauge Adapter, PT3/8: 57001 -1233

- Start the engine and warm up the engine.
- Run the engine at the specified speed, and read the oil pressure gauge.

Oil Pressure
Standard: About 295 kPa (3.01 kgf/cm², 42.8 psi) @4 000 r/min (rpm), oil temperature 50°C (122°F)

★If the oil pressure is much lower than the standard, check the oil pump, relief valve, and/or crankshaft bearing insert wear immediately.

★If the reading is much higher than the standard, check the oil passages for clogging.

- Stop the engine.
- Remove the oil pressure gauge and adapter.

⚠ WARNING

Hot oil can cause severe burns. Beware of hot engine oil that will drain through the oil passage when the gauge adapter is removed.

- Apply a non-permanent locking agent to the oil passage plug, and tighten it.

Torque - Oil Passage Plug: 20 N·m (2.0 kgf·m, 15 ft·lb)

- Install the right lower fairing (see Lower Fairing Installation in the Frame chapter).

Oil Pressure Switch

Oil Pressure Switch Removal

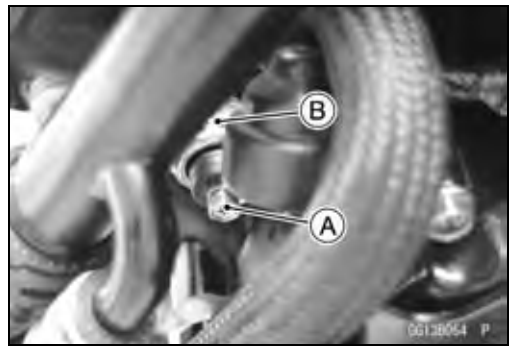

- Drain the engine oil (see Engine Oil Change in the Periodic Maintenance chapter).
- Remove the left lower fairing (see Lower Fairing Removal in the Frame chapter).
- Slide the switch cover.
- Remove:
  Switch Terminal Bolt [A]
  Oil Pressure Switch [B]

Oil Pressure Switch Installation

- Using a high flash-point solvent, clean off any oil or dirt that may be on the liquid gasket coating area. Dry them with a clean cloth.
- Apply liquid gasket to the threads of the oil pressure switch and tighten it.

Sealant - Liquid Gasket, TB1211: 56019-120

Torque - Oil Pressure Switch: 15 N·m (1.5 kgf·m, 11 ft·lb)

- Install the switch lead (see Cable, Wire, and Hose Routing section in the Appendix chapter).
- Tighten:

Torque - Oil Pressure Switch Terminal Bolt: 2.0 N·m (0.20 kgf·m, 18 in·lb)

- Apply grease to the terminal.

NOTE

○*Apply a small amount grease to the terminal so that grease should not close two breather holes [A] for switch diaphragm.*

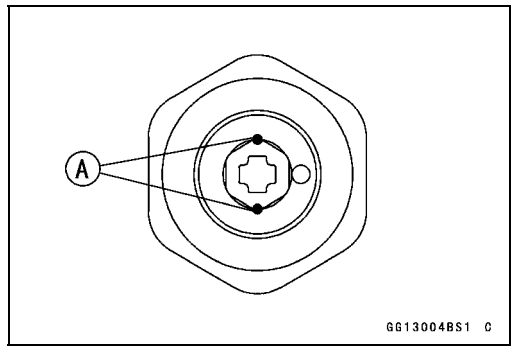

- Install the switch cover.
- Install the removed parts (see appropriate chapters).

Oil Pipe

Oil Pipe Removal

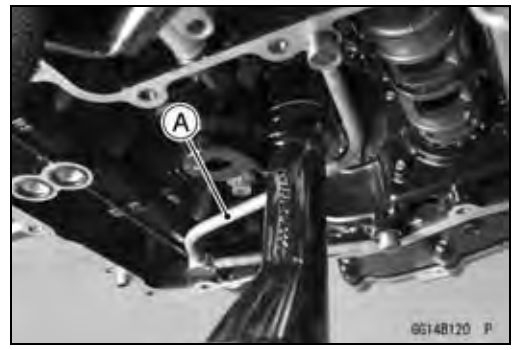

- Remove:
  Oil Pan (see Oil Pan Removal)
  Oil Pipe [A]

Oil Pipe Installation

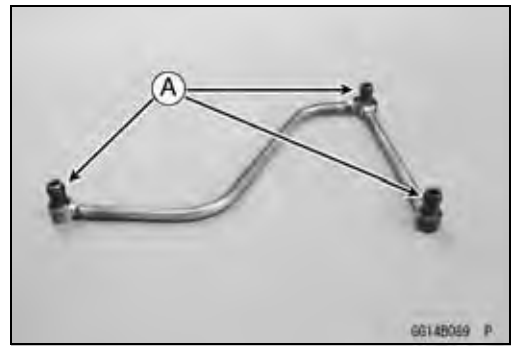

- Replace the O-rings [A] with new ones.
- Apply grease to the O-rings, and install them.
- Install:
  Oil Pipe
  Oil Pan (see Oil Pan Installation)

Engine Removal/Installation

Table of Contents

Exploded View 8-2
Engine Removal/Installation 8-4
Engine Removal 8-4
Engine Installation 8-6

Exploded View

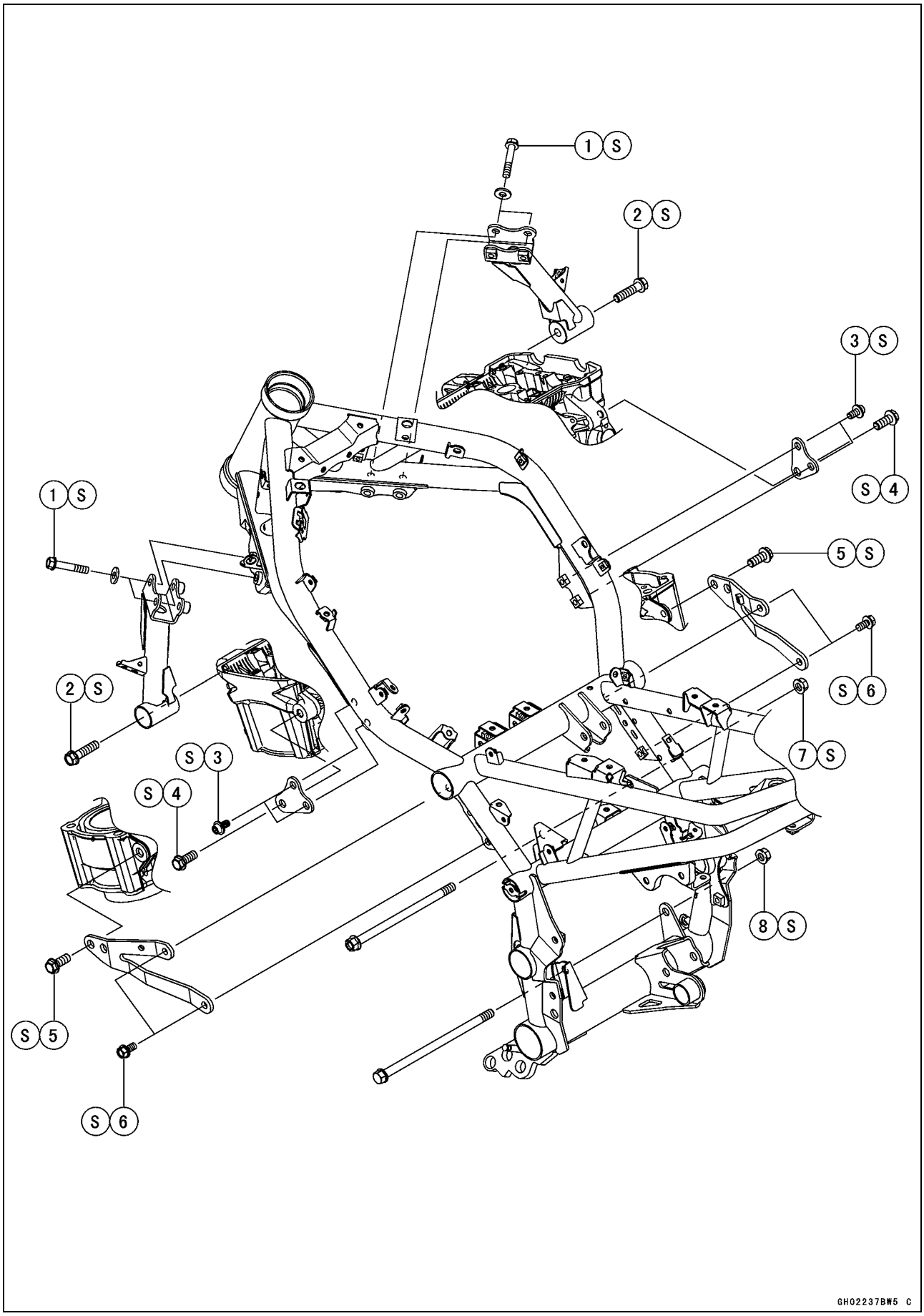

Exploded View

No.	Fastener	Torque			Remarks
		N·m	kgf·m	ft·lb	
1	Upper Front Engine Bracket Bolts	29	3.0	21	S
2	Upper Front Engine Mounting Bolts	59	6.0	44	S
3	Upper Rear Engine Bracket Bolts	25	2.5	18	S
4	Upper Rear Engine Mounting Bolts	44	4.5	32	S
5	Middle Front Engine Mounting Bolts	44	4.5	32	S
6	Middle Engine Bracket Bolts	25	2.5	18	S
7	Middle Rear Engine Mounting Nut	44	4.5	32	S
8	Lower Engine Mounting Nut	44	4.5	32	S

S: Follow the specified tightening sequence.

Engine Removal/Installation

Engine Removal

- Support the rear part of the swingarm with a stand.
- Squeeze the brake lever slowly and hold it with a band [A].

⚠ WARNING

Motorcycle may fall over unexpectedly resulting in an accident or injury. Be sure to hold the front brake when removing the engine.

NOTICE

Be sure to hold the front brake when removing the engine, or the motorcycle may fall over. The engine or the motorcycle could be damaged.

- Drain:
  Engine Oil (see Engine Oil Change in the Periodic Maintenance chapter)
  Coolant (see Coolant Change in the Periodic Maintenance chapter)
- Remove:
  Lower Fairings (see Lower Fairing Removal in the Frame chapter)
  Clutch Cable Lower End (see Clutch Cable Removal in the Clutch chapter)
  Exhaust Pipe (see Exhaust Pipe Removal in the Engine Top End chapter)
  Air Switching Valve (see Air Switching Valve Removal in the Engine Top End chapter)
  Coolant Reserve Tank (see Coolant Reserve Tank Removal in the Cooling System chapter)
  Shift Lever (see Shift Pedal Removal in the Crankshaft/Transmission chapter)
  Engine Sprocket (see Engine Sprocket Removal in the Final Drive chapter)
- Disconnect:
  Stick Coil Connectors (see Stick Coil Removal in the Electrical System chapter)
  Alternator Lead Connector (see Alternator Cover Removal in the Electrical System chapter)
  Crankshaft Sensor Lead Connector (see Crankshaft Senor Removal in the Electrical System chapter)
  Starter Motor Cable (see Starter Motor Removal in the Electrical System chapter)

Engine Removal/Installation

- Slide the clamps [A].
- Disconnect:
  Air Bleeder Hose [B]
  Water Hose [C]

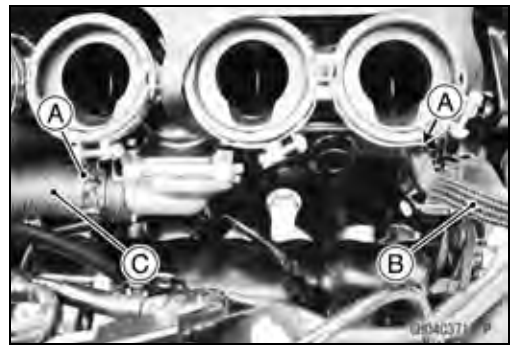

- Open the clamps [A].
- Disconnect the oil pressure switch lead [B] and gear position sensor lead connector [C].

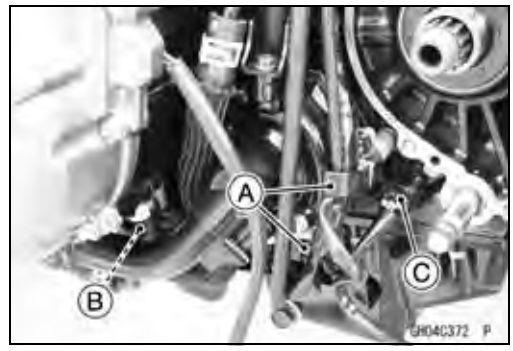

- Remove the clamps [A].

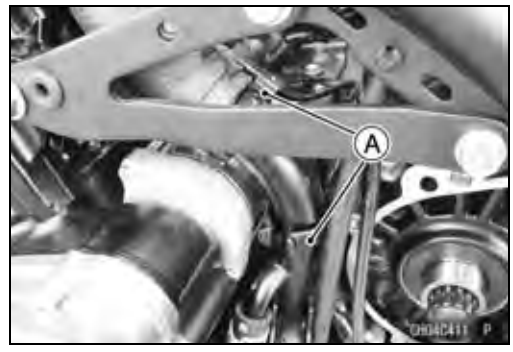

- Remove the engine ground cable terminal bolt [A].

- Remove the drive chain [A] from the output shaft [B].

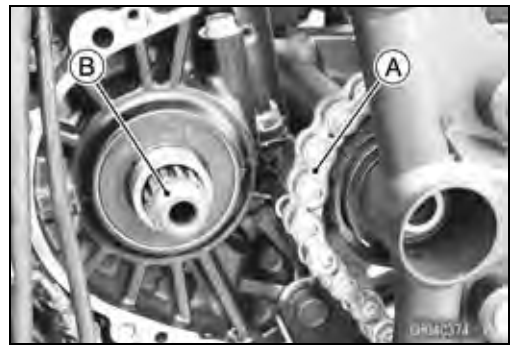

Engine Removal/Installation

● Support the engine with a suitable stand [A].
○Put a plank [B] onto the suitable stand for engine balance.

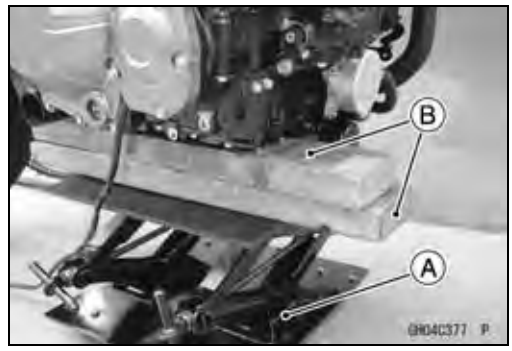

● Remove:
Upper Front Engine Mounting Bolt [A] (Both Sides)
Upper Front Engine Bracket Bolts [B] and Washers (Both Sides)
Upper Front Engine Bracket [C] (Both Sides)

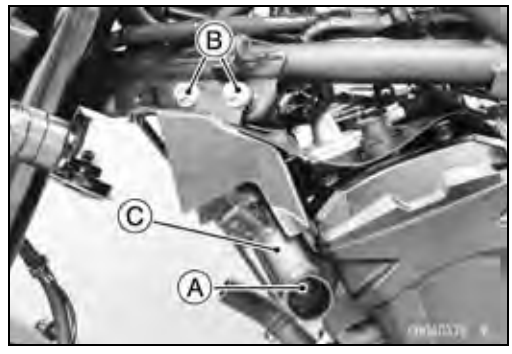

● Free the crankshaft sensor lead [A] from the clamp.
● Remove:
Lower Fairing Bracket Bolts [B]
Lower Fairing Bracket [C]

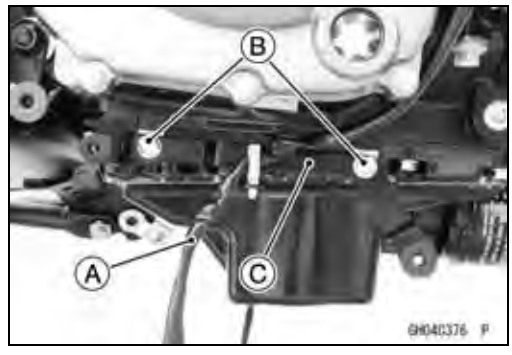

● Remove:
Upper Rear Engine Mounting Bolt [A] (Both Sides)
Middle Front Engine Mounting Bolt [B] (Both Sides)
Upper Rear Engine Bracket Bolts [C] and Bracket (Both Sides)
Middle Engine Bracket Bolts [D] and Bracket (Both Sides)

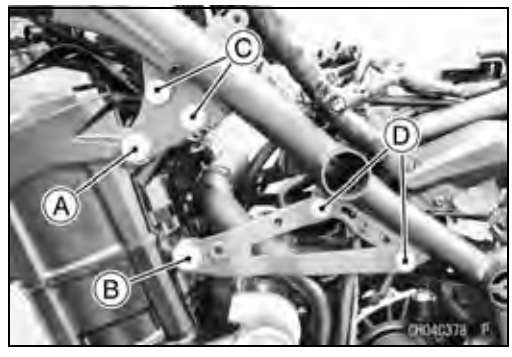

● Remove:
Middle Rear Engine Mounting Nut [A] and Bolt
Lower Engine Mounting Nut [B] and Bolt
● Using the suitable stand, take out the engine.

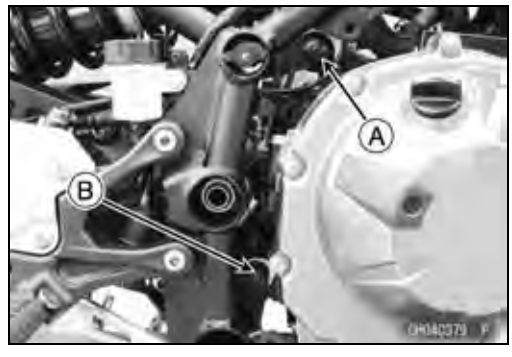

Engine Installation

● Support the engine with a suitable stand.
○Put a plank onto the suitable stand for engine balance.

Engine Removal/Installation

This page intentionally left blank.

Engine Removal/Installation

● Install the engine mounting bolts and nuts, following the specified installing sequence.
○First, hang the drive chain over the output shaft just before moving the engine into its final position in the frame.
○Second, insert the lower engine mounting bolt [A] and middle rear engine mounting bolt [B] temporarily.
○Third, tighten the lower engine mounting nut [C] and middle rear engine mounting nut temporarily by hand.
○Forth, install the following parts temporarily.
Upper Front Engine Brackets [E]
Upper Rear Engine Brackets [F]
Middle Engine Brackets [G]
○Fifth, tighten the following parts temporarily by hand.
Upper Front Engine Bracket Bolts [H]
Upper Rear Engine Bracket Bolts [I]
Middle Engine Bracket Bolts [J]
Upper Front Engine Mounting Bolts [K]
Upper Rear Engine Mounting Bolts [L]
Middle Front Engine Mounting Bolts [M]
○Sixth, temporarily tighten the lower engine mounting nut [C].
○Seventh, temporarily tighten the middle rear engine mounting nut [D].
○Eighth, tighten the following parts temporarily.
Upper Front Engine Mounting Bolts [K]
Upper Rear Engine Mounting Bolts [L]
Middle Front Engine Mounting Bolts [M]
○Ninth, tighten the following parts temporarily.
Upper Front Engine Bracket Bolts [H]
Upper Rear Engine Bracket Bolts [I]
Middle Engine Bracket Bolts [J]
○Tenth, by the following specified sequence [1 ~ 8], tighten the nuts and bolts.

Torque - Lower Engine Mounting Nut [C]: 44 N·m (4.5 kgf·m, 32 ft·lb)
Middle Rear Engine Mounting Nut [D]: 44 N·m (4.5 kgf·m, 32 ft·lb)
Upper Front Engine Bracket Bolts [H]: 29 N·m (3.0 kgf·m, 21 ft·lb)
Upper Rear Engine Bracket Bolts [I]: 25 N·m (2.5 kgf·m, 18 ft·lb)
Middle Engine Bracket Bolts [J]: 25 N·m (2.5 kgf·m, 18 ft·lb)
Upper Front Engine Mounting Bolts [K]: 59 N·m (6.0 kgf·m, 44 ft·lb)
Upper Rear Engine Mounting Bolts [L]: 44 N·m (4.5 kgf·m, 32 ft·lb)
Middle Front Engine Mounting Bolts [M]: 44 N·m (4.5 kgf·m, 32 ft·lb)

Engine Removal/Installation

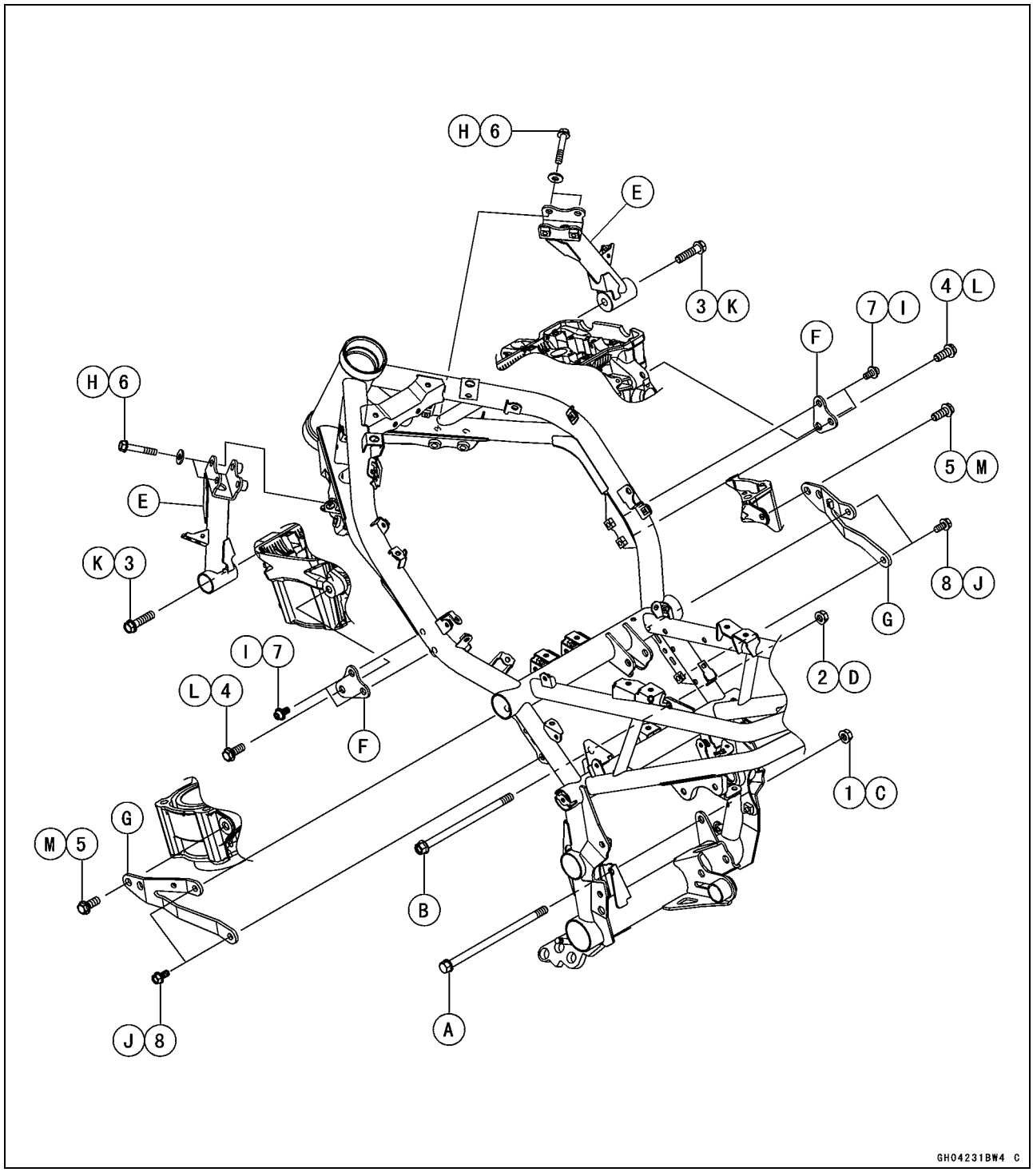

- Run the leads, cables and hoses correctly (see Cable, Wire, and Hose Routing section in the Appendix chapter).
- Install the removed parts (see appropriate chapters).
- Adjust:
  Throttle Cables (see Throttle Control System Inspection in the Periodic Maintenance chapter)
  Clutch Cable (see Clutch Operation Inspection in the Periodic Maintenance chapter)
  Drive Chain (see Drive Chain Slack Inspection in the Periodic Maintenance chapter)
- Fill the engine with engine oil (see Engine Oil Change in the Periodic Maintenance chapter).
- Fill the engine with coolant (see Coolant Change in the Periodic Maintenance chapter).

Crankshaft/Transmission

Table of Contents

Exploded View 9-2
Specifications 9-6
Special Tools and Sealants 9-8
Crankcase Splitting 9-9
  Crankcase Splitting 9-9
  Crankcase Assembly 9-10
Crankshaft and Connecting Rods 9-15
  Crankshaft Removal 9-15
  Crankshaft Installation 9-15
  Connecting Rod Removal 9-15
  Connecting Rod Installation 9-16
  Crankshaft/Connecting Rod Cleaning 9-20
  Connecting Rod Bend Inspection 9-20
  Connecting Rod Twist Inspection. 9-20
  Connecting Rod Big End Side Clearance Inspection 9-21
  Connecting Rod Big End Bearing Insert/Crankpin Wear Inspection 9-21
  Crankshaft Side Clearance Inspection 9-23
  Crankshaft Runout Inspection 9-24
  Crankshaft Main Bearing Insert/Journal Wear Inspection . 9-24
Balancer 9-27
  Balancer Removal 9-27
  Balancer Installation 9-27
  Balancer Adjustment 9-28
  Balancer Damper Inspection 9-28
Starter Motor Clutch 9-29
  Starter Motor Clutch Removal/Installation 9-29
  Starter Motor Clutch Disassembly 9-29
  Starter Motor Clutch Assembly 9-29
  Starter Motor Clutch Inspection ... 9-29
External Shift Mechanism 9-30
  Shift Pedal Removal 9-30
  Shift Pedal Installation 9-30
  External Shift Mechanism Removal 9-31
  External Shift Mechanism Installation 9-31
  External Shift Mechanism Inspection 9-32
Transmission 9-34
  Transmission Shaft Removal 9-34
  Transmission Shaft Installation 9-34
  Transmission Shaft Disassembly. 9-34
  Transmission Shaft Assembly 9-35
  Shift Drum and Fork Removal 9-40
  Shift Drum and Fork Installation ... 9-40
  Shift Drum Disassembly 9-40
  Shift Drum Assembly 9-41
  Shift Fork Bending Inspection 9-41
  Shift Fork/Gear Groove Wear Inspection 9-41
  Shift Fork Guide Pin/Drum Groove Wear Inspection 9-41
  Gear Dog and Gear Dog Hole Damage Inspection 9-42
Ball Bearing, Needle Bearing, and Oil Seal 9-43
  Ball and Needle Bearing Replacement 9-43
  Ball and Needle Bearing Wear Inspection 9-43
  Oil Seal Inspection 9-43

Exploded View

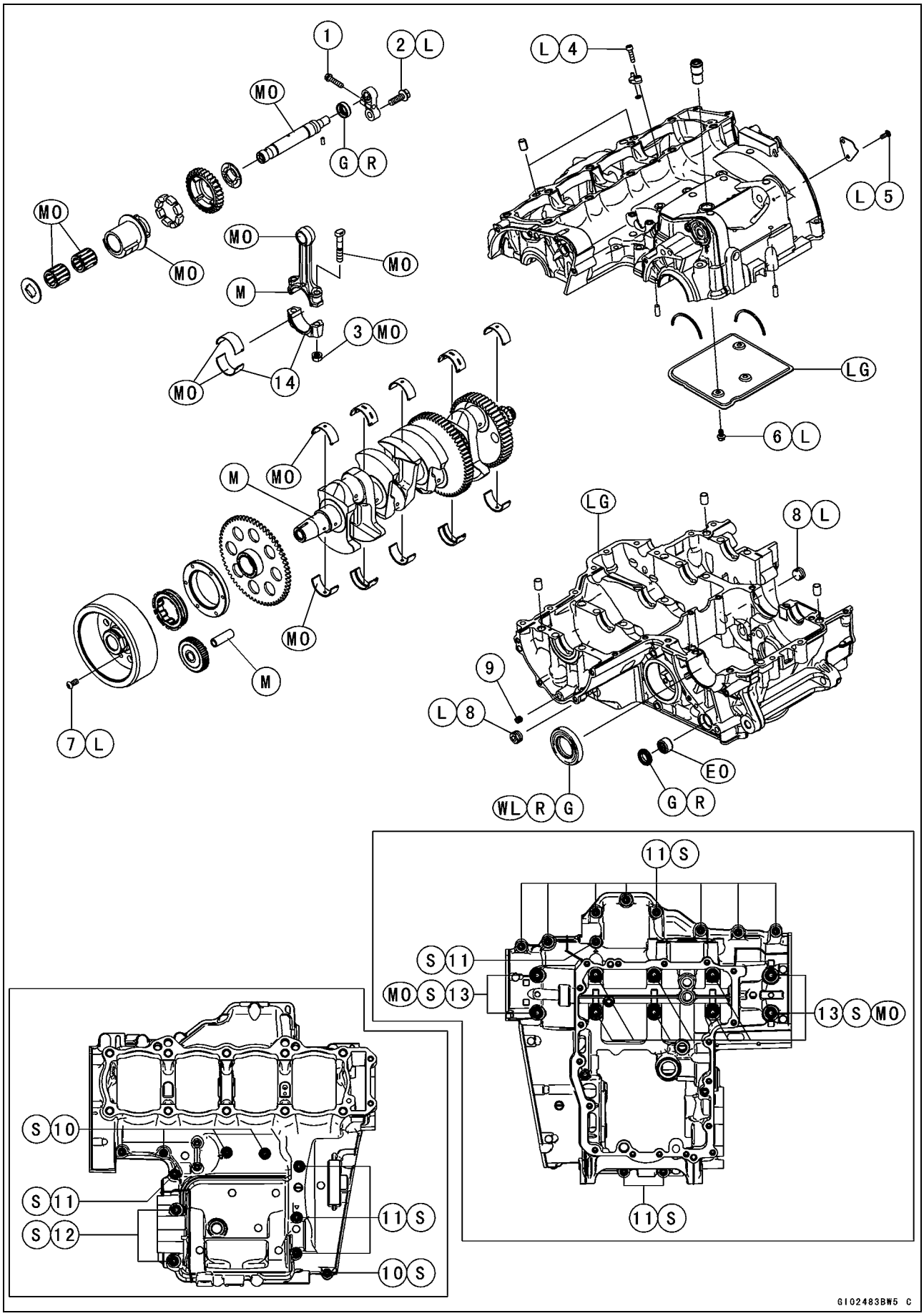

Exploded View

No.	Fastener	Torque			Remarks
		N·m	kgf·m	ft·lb	
1	Balancer Shaft Clamp Bolt	9.8	1.0	87 in·lb	
2	Balancer Shaft Clamp Lever Bolt	25	2.5	18	L
3	Connecting Rod Big End Nuts	see the text	←	←	MO
4	Oil Jet Nozzle Bolt	6.9	0.70	61 in·lb	L
5	Breather Side Plate Bolt	5.9	0.60	52 in·lb	L
6	Breather Plate Bolts	9.8	1.0	87 in·lb	L
7	Starter Motor Clutch Bolts	12	1.2	106 in·lb	L
8	Oil Passage Plugs	20	2.0	15	L
9	Oil Passage Plug	10	1.0	89 in·lb	
10	Crankcase Bolts (M6)	12	1.2	106 in·lb	S
11	Crankcase Bolts (M7)	20	2.0	15	S
12	Crankcase Bolts (M8)	27	2.8	20	S
13	Crankcase Bolts (M9)	44	4.5	32	MO, S

14. Do not apply any grease or oil.
EO: Apply engine oil.
G: Apply grease.
L: Apply a non-permanent locking agent.
LG: Apply liquid gasket.
M: Apply molybdenum disulfide grease.
MO: Apply molybdenum disulfide oil solution.
(mixture of the engine oil and molybdenum disulfide grease in a weight ratio 10:1)
R: Replacement Parts
S: Follow the specified tightening sequence.

Exploded View

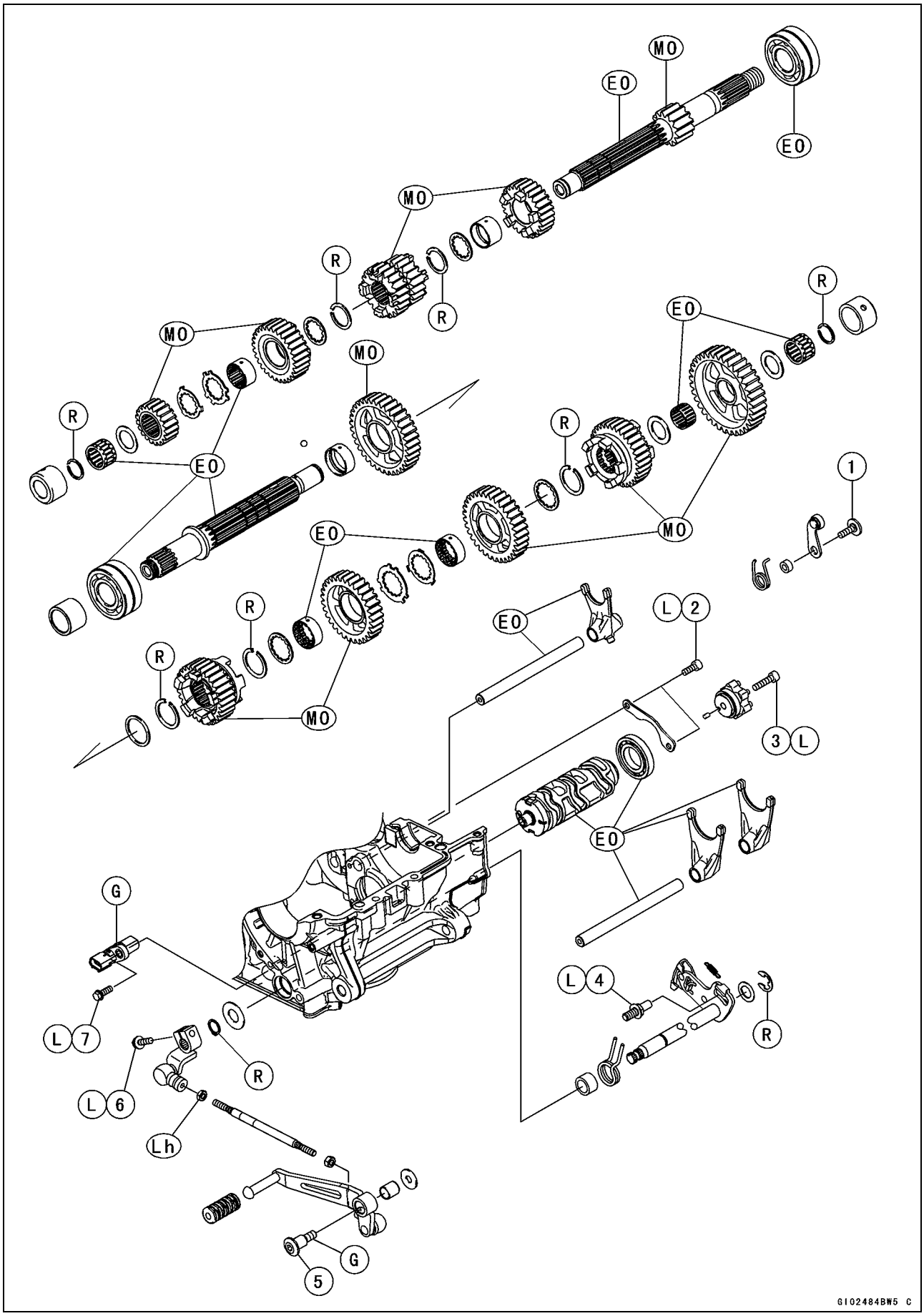

Exploded View

No.	Fastener	Torque			Remarks
		N·m	kgf·m	ft·lb	
1	Gear Positioning Lever Bolt	12	1.2	106 in·lb	
2	Shift Drum Bearing Holder Bolts	12	1.2	106 in·lb	L
3	Shift Drum Cam Holder Bolt	12	1.2	106 in·lb	L
4	Shift Shaft Return Spring Pin	39	4.0	29	L
5	Shift Pedal Mounting Bolt	25	2.5	18	G
6	Shift Lever Clamp Bolt	9.8	1.0	87 in·lb	L
7	Gear Position Sensor Bolt	10	1.0	89 in·lb	L

EO: Apply engine oil.
G: Apply grease.
MO: Apply molybdenum disulfide oil solution.
(mixture of the engine oil and molybdenum disulfide grease in a weight ratio 10:1)
L: Apply a non-permanent locking agent.
Lh: Left-hand Threads
R: Replacement Parts

Specifications

Item	Standard	Service Limit
Crankcase, Crankshaft, Connecting Rods		
Connecting Rod Bend	– – –	TIR 0.2/100mm (0.008/3.94 in.)
Connecting Rod Twist	– – –	TIR 0.2/100mm (0.008/3.94 in.)
Connecting Rod Big End Side Clearance	0.13 ~ 0.38 mm (0.0051 ~ 0.0150 in.)	0.6 mm (0.02 in.)
Connecting Rod Big End Bearing Insert/Crankpin Clearance	0.030 ~ 0.060 mm (0.0012 ~ 0.0024 in.)	0.10 mm (0.0039 in.)
Crankpin Diameter:	34.484 ~ 34.500 mm (1.3576 ~ 1.3583 in.)	34.47 mm (1.357 in.)
Marking:		
None	34.484 ~ 34.492 mm (1.3576 ~ 1.35795 in.)	– – –
○	34.493 ~ 34.500 mm (1.35799 ~ 1.3583 in.)	– – –
Connecting Rod Big End Inside Diameter:	37.500 ~ 37.516 mm (1.4764 ~ 1.4770 in.)	– – –
Marking:		
None	37.500 ~ 37.508 mm (1.4764 ~ 1.47669 in.)	– – –
○	37.509 ~ 37.516 mm (1.47673 ~ 1.4770 in.)	– – –
Connecting Rod Big End Bearing Insert Thickness:		
Brown	1.478 ~ 1.483 mm (0.05819 ~ 0.05839 in.)	– – –
Black	1.483 ~ 1.488 mm (0.05839 ~ 0.05858 in.)	– – –
Blue	1.488 ~ 1.493 mm (0.05858 ~ 0.05878 in.)	– – –
Connecting Rod Bolt Stretch:		
New Connecting Rod (Use the bolts attached to new connecting rod.)	(Usable Range) 0.20 ~ 0.32 mm (0.0079 ~ 0.0126 in.)	– – –
Used Connecting Rod (Replace the bolts with new ones.)	(Usable Range) 0.24 ~ 0.36 mm (0.0094 ~ 0.0142 in.)	– – –
Crankshaft Side Clearance	0.09 ~ 0.19 mm (0.0035 ~ 0.0075 in.)	0.39 mm (0.015 in.)
Crankshaft #3 Main Journal Width	23.49 ~ 23.54 mm (0.9248 ~ 0.9268 in.)	– – –
Crankshaft Runout	TIR 0.02 mm (0.0008 in.) or less	TIR 0.05 mm (0.0020 in.)
Crankshaft Main Bearing Insert/Journal Clearance	0.010 ~ 0.034 mm (0.0004 ~ 0.0013 in.)	0.06 mm (0.0024 in.)
Crankshaft Main Journal Diameter:	34.984 ~ 35.000 mm (1.3773 ~ 1.3780 in.)	34.96 mm (1.376 in.)
Marking:		
None	34.984 ~ 34.992 mm (1.3773 ~ 1.3776 in.)	– – –
1	34.993 ~ 35.000 mm (1.3777 ~ 1.3780 in.)	– – –

Specifications

Item	Standard	Service Limit
Crankcase Main Bearing Inside Diameter:	38.000 ~ 38.016 mm (1.4961 ~ 1.4967 in.)	– – –
Marking:		
None	38.000 ~ 38.008 mm (1.4961 ~ 1.49637 in.)	– – –
○	38.009 ~ 38.016 mm (1.49641 ~ 1.4967 in.)	– – –
Crankshaft Main Bearing Insert Thickness:		
Brown	1.491 ~ 1.495 mm (0.05870 ~ 0.05886 in.)	– – –
Black	1.495 ~ 1.499 mm (0.05886 ~ 0.05902 in.)	– – –
Blue	1.499 ~ 1.503 mm (0.05902 ~ 0.05917 in.)	– – –
Transmission		
Shift Fork Ear Thickness	5.9 ~ 6.0 mm (0.232 ~ 0.236 in.)	5.8 mm (0.228 in.)
Shifter Groove Width	6.05 ~ 6.15 mm (0.238 ~ 0.242 in.)	6.3 mm (0.25 in.)
Shift Fork Guide Pin Diameter	6.9 ~ 7.0 mm (0.272 ~ 0.276 in.)	6.8 mm (0.268 in.)
Shift Drum Groove Width	7.05 ~ 7.20 mm (0.278 ~ 0.283 in.)	7.3 mm (0.29 in.)

Connecting Rod Big End Bearing Insert Selection

Con-rod Big End Inside Diameter Marking	Crankpin Diameter Marking	Bearing Insert	
		Size Color	Part Number
None	○	Brown	92139-0124
None	None	Black	92139-0123
○	○		
○	None	Blue	92139-0122

Crankshaft Main Bearing Insert Selection

Crankcase Main Bearing Inside Diameter Marking	Crankshaft Main Journal Diameter Marking	Bearing Insert*		
		Size Color	Part Number	Journal Nos.
○	1	Brown	92139-0034	2, 4
			92139-0219	1, 3, 5
None	1	Black	92139-0033	2, 4
○	None		92139-0218	1, 3, 5
None	None	Blue	92139-0032	2, 4
			92139-0217	1, 3, 5

*: The bearing inserts for Nos. 2 and 4 journals have an oil groove, respectively.

Special Tools and Sealants

Bearing Puller:
57001-135

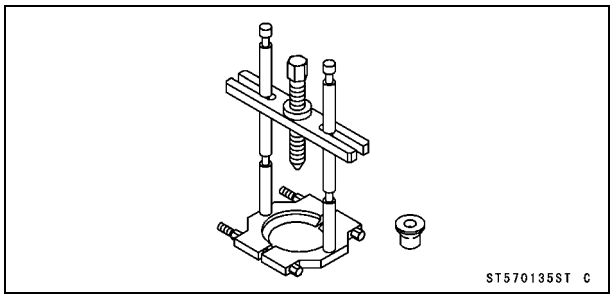

Bearing Driver Set:
57001-1129

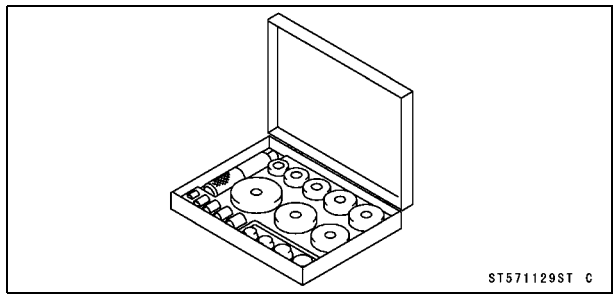

Outside Circlip Pliers:
57001-144

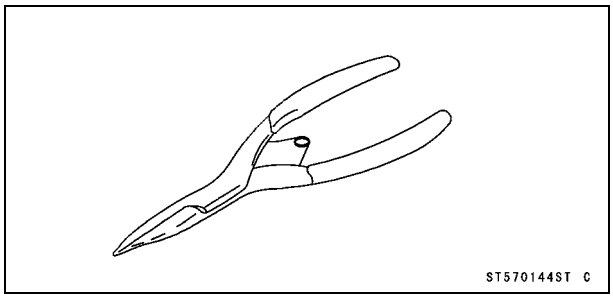

Flywheel Holder:
57001-1313

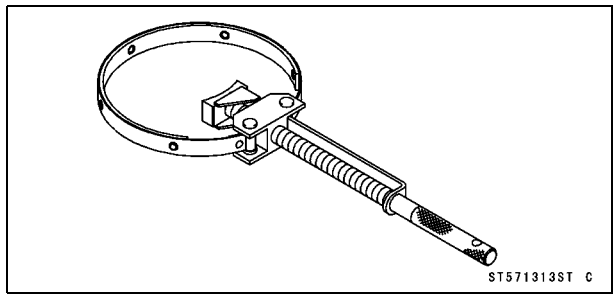

Bearing Puller Adapter:
57001-317

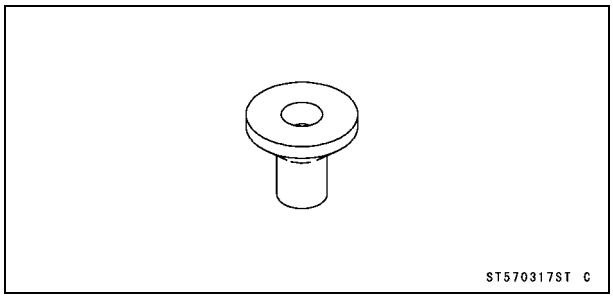

Liquid Gasket, TB1216B:
92104-1064

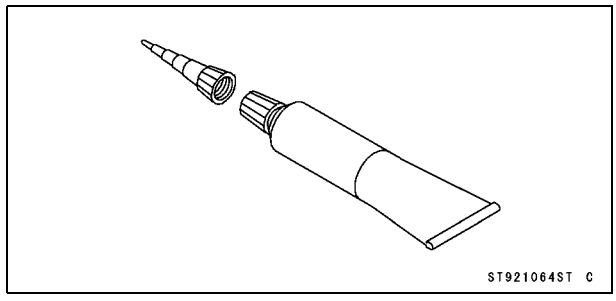

Bearing Driver, ϕ32:
57001-382

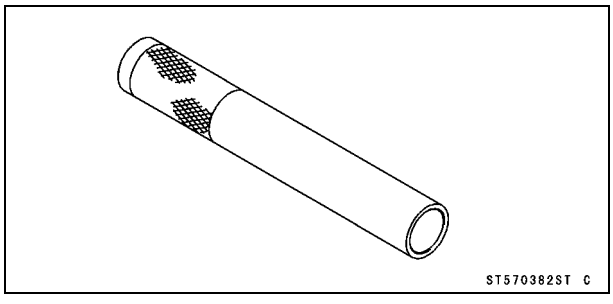

Liquid Gasket, TB1207B:
92104-2068

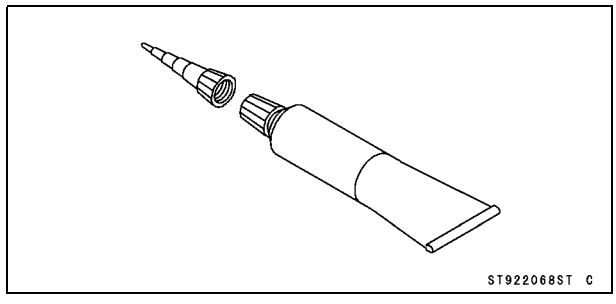

Crankcase Splitting

Crankcase Splitting

- Remove the engine (see Engine Removal in the Engine Removal/Installation chapter).
- Set the engine on a clean surface and hold the engine steady while parts are being removed.
- For MY model, remove the oil cooler (see Oil Cooler Removal in the Engine lubrication System chapter)
- For other than MY model, remove the oil passage cover.
- Remove:
  Cylinder (see Cylinder Removal in the Engine Top End chapter)
  Clutch (see Clutch Removal in the Clutch chapter)
  External Shift Mechanism (see External Shift Mechanism Removal)
  Starter Motor (see Starter Motor Removal in the Electrical System chapter)
  Oil Pump (see Oil Pump Removal in the Engine Lubrication System chapter)
  Alternator Rotor (see Alternator Rotor Removal in the Electrical System chapter)
  Oil Pipe (see Oil Pipe Removal in the Engine Lubrication System chapter)
  Oil Screen (see Oil Screen Removal in the Engine Lubrication System chapter)

★If the crankshaft is to be removed, remove the pistons (see Piston Removal in the Engine Top End chapter).

- Loosen the balancer shaft clamp bolt [A].
- Remove:
  Balancer Shaft Clamp Lever Bolt [B]
  Balancer Shaft Clamp Lever [C]

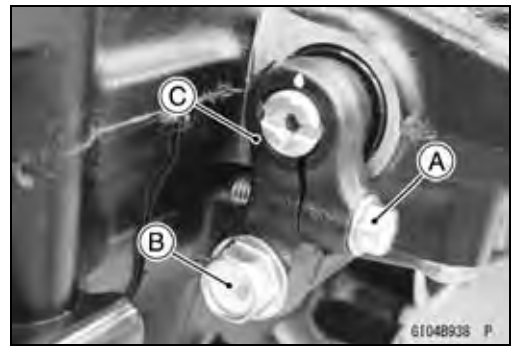

- Remove the upper crankcase bolts, following the specified sequence.

○Firstly, loosen the M6 bolts [A].
○Secondly, loosen the M7 bolts [B].
○Lastly, loosen the M8 bolts [C].

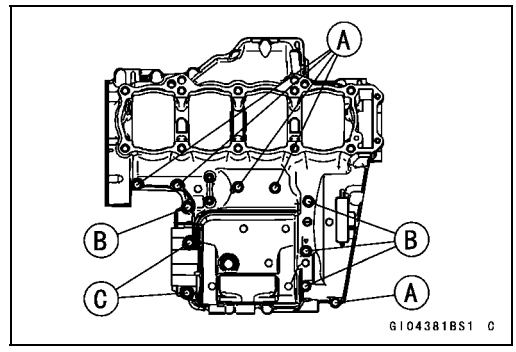

Crankcase Splitting

● Remove the lower crankcase bolts, following the specified sequence.
○Firstly, loosen the M7 bolts [A].
○Lastly, loosen the M9 bolts as shown sequence [1 ~ 10].
● Tap lightly around the crankcase mating surface with a plastic mallet, and split the crankcase.
○Take care not to damage the crankcase.

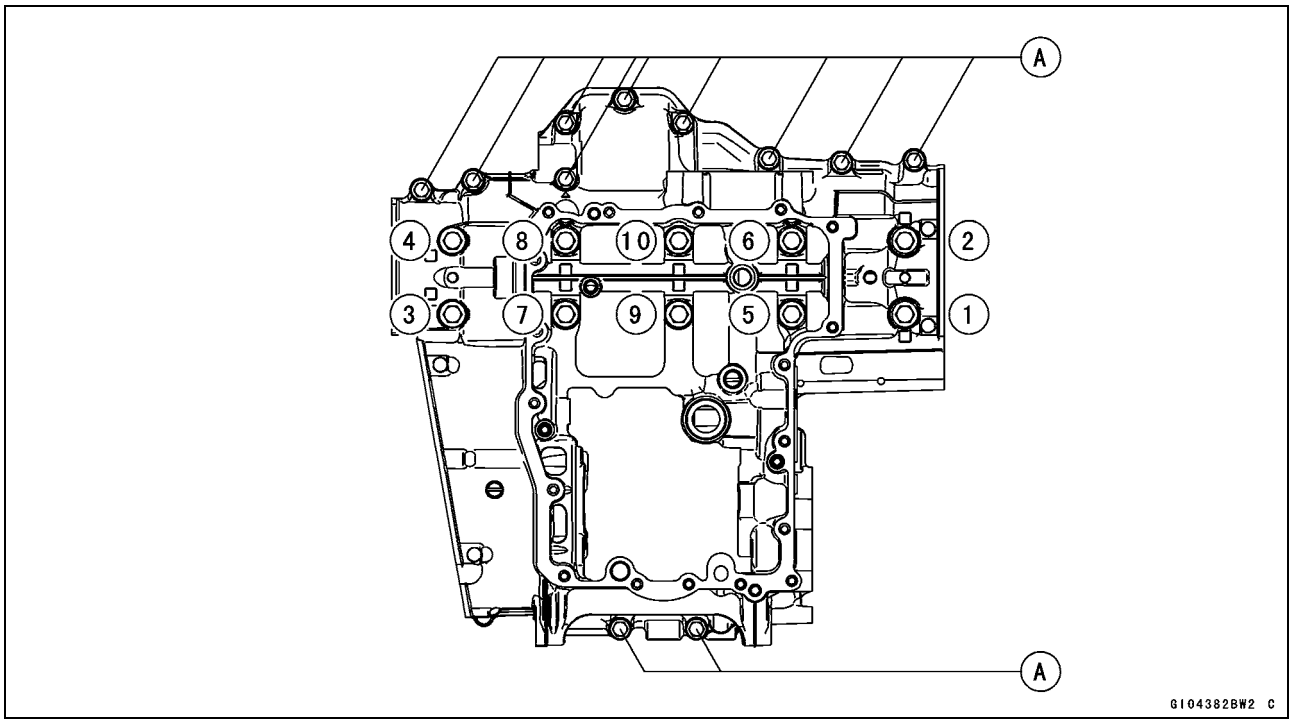

Crankcase Assembly

NOTICE
The upper and lower crankcase halves are machined at the factory in the assembled state, so the crankcase halves must be replaced as a set.

● With a high flash-point solvent, clean off the mating surfaces of the crankcase halves and wipe dry.
● Using compressed air, blow out the oil passages in the crankcase halves.

● Using a high flash-point solvent, clean off any oil or dirt that may be on the liquid gasket coating area. Dry them with a clean cloth.
● Apply liquid gasket to the breather plate mating surface [A] 1 mm (0.04 in.) or more thick, and then install the breather plate.
○Apply liquid gasket start from the corner area [B] as shown.

Sealant - Liquid Gasket, TB1207B: 92104-2068

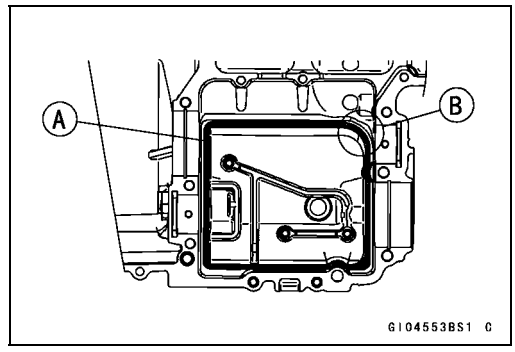

NOTE

○*Make the application finish within 7 minutes when the liquid gasket to the mating surface of the breather plate is applied.*
○*Moreover fit the plate and tighten the bolts just after application of the liquid gasket.*

Crankcase Splitting

- Apply a non-permanent locking agent to the threads of the breather plate bolts [A] and tighten them.

  Torque - Breather Plate Bolts: 9.8 N·m (1.0 kgf·m, 87 in·lb)

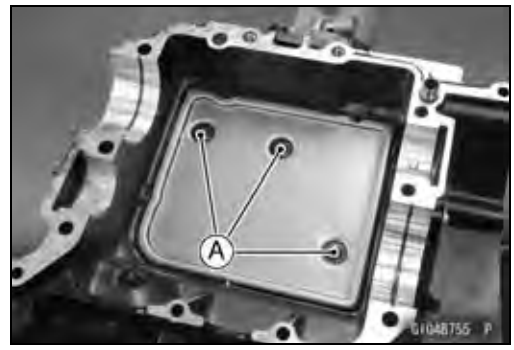

- Install the breather side plate [A] so that the plate hole [B] fit the projection [C] of the upper crankcase.
- Apply a non-permanent locking agent to the threads of the breather side plate bolt [D] and tighten it.

  Torque - Breather Side Plate Bolt: 5.9 N·m (0.60 kgf·m, 52 in·lb)

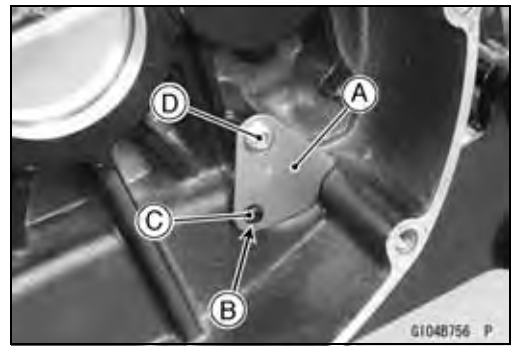

- Press the fitting [A] in the upper crankcase [B] until it is bottomed.

  Special Tool - Bearing Driver Set: 57001-1129

- Press the plug [C] in the upper crankcase so that the plug is deeper than crankcase surface.

  Special Tool - Bearing Driver Set: 57001-1129

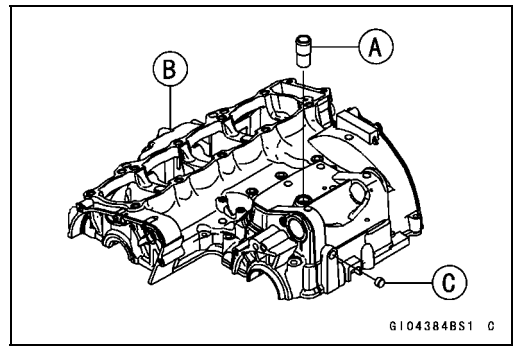

- Press the new needle bearing [A] for the shift shaft so that its marked side faces outside and its surface [B] is flush with the end of the hole.

  Special Tool - Bearing Driver Set: 57001-1129

- Install the new oil seal [C] so that its surface [D] is flush with the end of the hole.

  Special Tool - Bearing Driver Set: 57001-1129

- Apply grease to the oil seal lips.

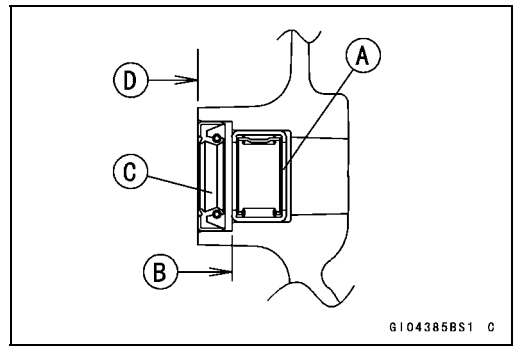

- Apply a non-permanent locking agent to the oil passage plugs [A], and tighten them.

  Torque - Oil Passage Plugs: 20 N·m (2.0 kgf·m, 15 ft·lb)

- Install the oil passage plug [B] in the lower crankcase, and tighten it.

  Torque - Oil Passage Plug: 10 N·m (1.0 kgf·m, 89 in·lb)

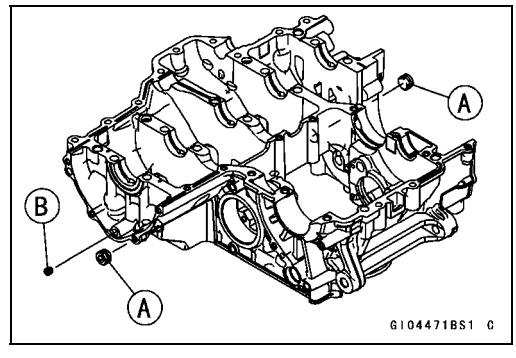

Crankcase Splitting

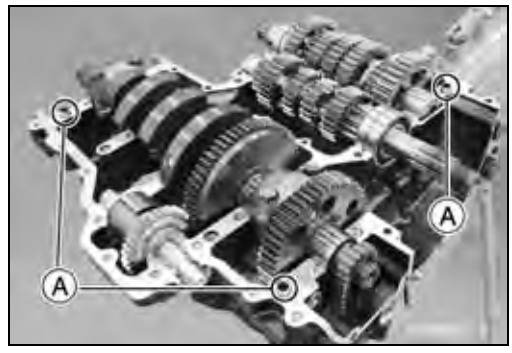

● Install:
Crankshaft (see Crankshaft Installation)
Connecting Rods (see Connecting Rod Installation)
Balancer (see Balancer Installation)
Transmission Shafts (see Transmission Shaft Installation)
Dowel Pins [A]
Shift Drum (see Shift Drum and Fork Installation)
Shift Forks and Shift Rods (see Shift Drum and Fork Installation)

● Before fitting the lower case on the upper case, check the following.
○Be sure to hang the camshaft chain on the crankshaft.
○Check to see that the shift drum and transmission gears are in the neutral position.

● Using a high flash-point solvent, clean off any oil or dirt that may be on the liquid gasket coating area. Dry them with a clean cloth.
● Apply liquid gasket [A] to the mating surface of the lower crankcase half.

Sealant - Liquid Gasket, TB1216B: 92104-1064

NOTE

○*Especially, apply a liquid gasket so that it shall be filled up on the grooves [B].*
○*Do not apply liquid gasket to the inside of the groove [C].*

NOTICE
Do not apply liquid gasket around the crankshaft main bearing inserts and oil passage holes.

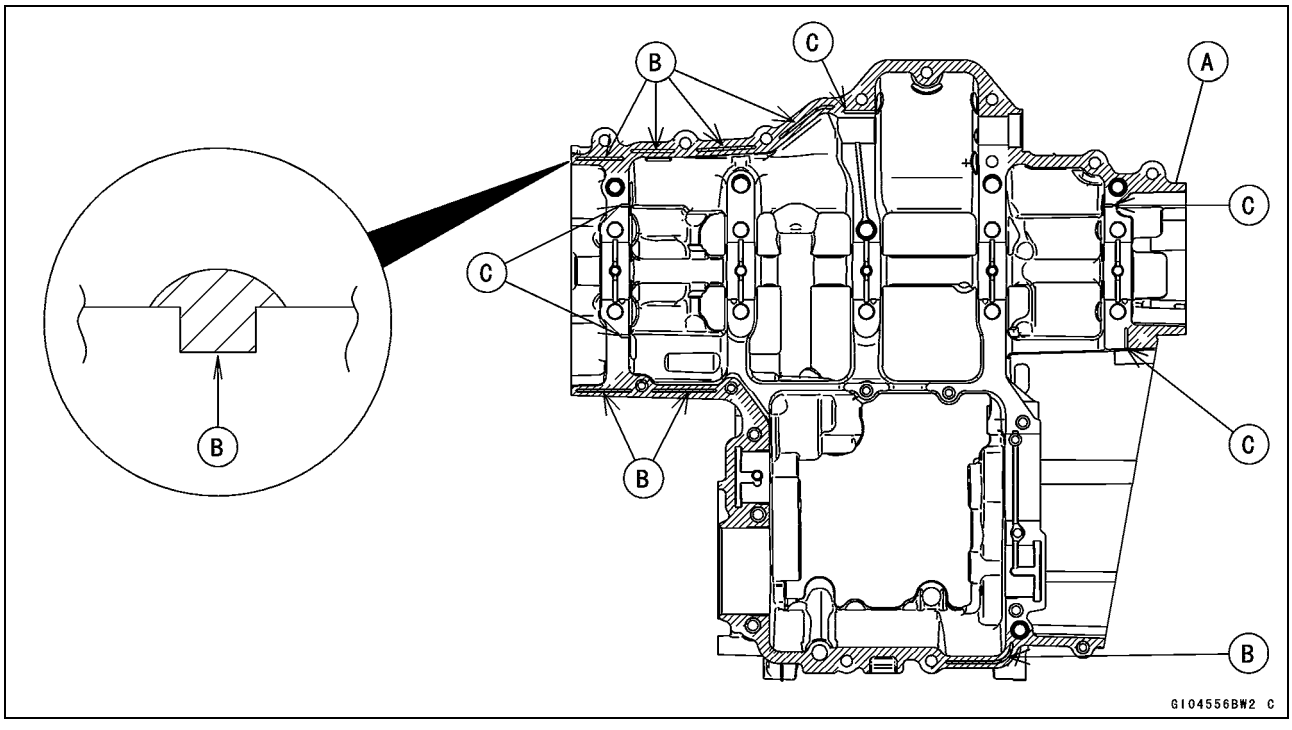

Crankcase Splitting

● Fit the lower crankcase to the upper crankcase.

NOTE

○*Make the application finish within 20 minutes when the liquid gasket to the mating surface of the lower crankcase half is applied.*

○*Moreover fit the case and tighten the bolts just after application of the liquid gasket.*

● The M9 bolts [A] have copper plated washers [B], replace them with new ones.

● Apply molybdenum disulfide oil solution to both sides [C] of the copper plated washer and threads [D] of the M9 bolts.

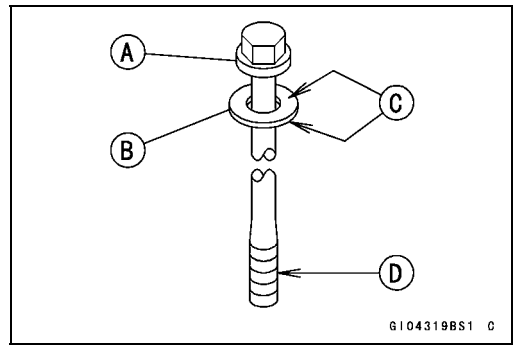

● Tighten the lower crankcase bolts using the following steps.

○Following the sequence numbers on the lower crankcase half, tighten the M9 bolts [1 ~ 10] with copper plated washers.

Torque - Crankcase Bolts (M9): 44 N·m (4.5 kgf·m, 32 ft·lb)

○Replace the washer [A] with a new one.

○Tighten the M7 bolts.

Torque - Crankcase Bolts (M7): 20 N·m (2.0 kgf·m, 15 ft·lb)

L = 60 mm (2.36 in.) [B]
L = 50 mm (1.97 in.) [C]
L = 45 mm (1.77 in.) [D]

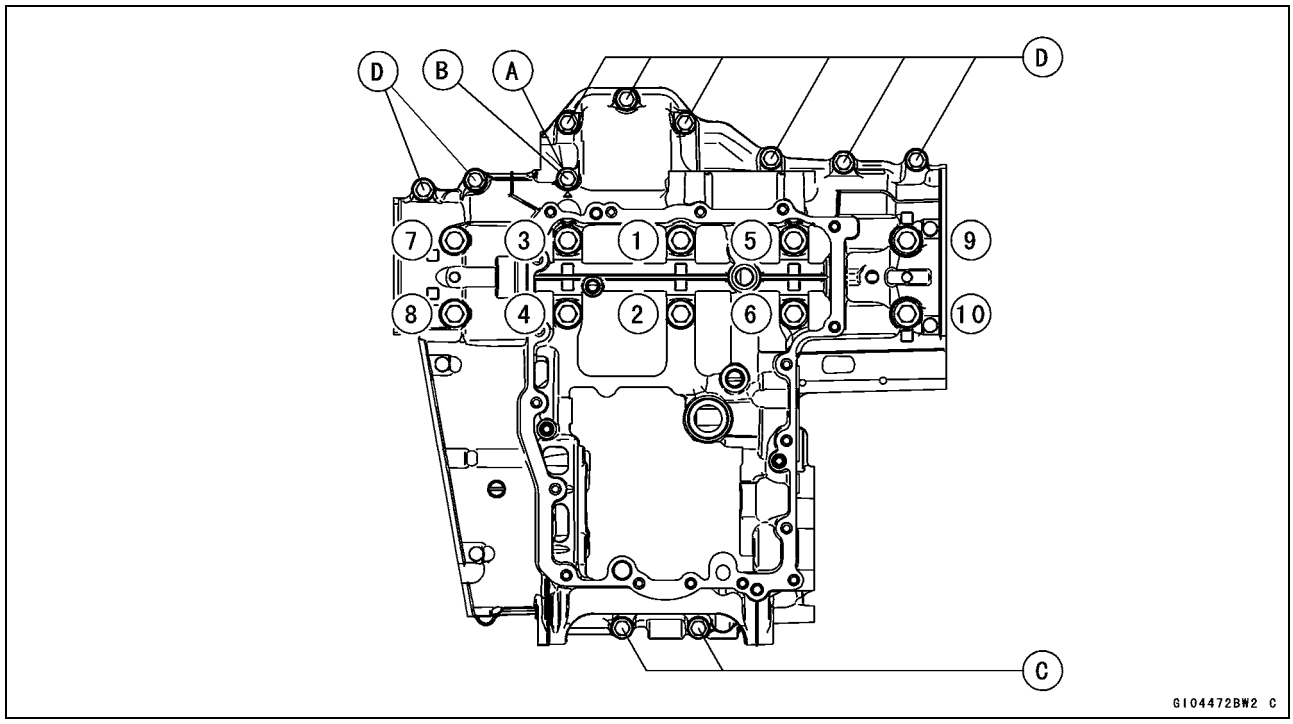

Crankcase Splitting

● Tighten the upper crankcase bolts using the following steps.

○Tighten the M8 bolts [A].

Torque - Crankcase Bolts (M8): 27 N·m (2.8 kgf·m, 20 ft·lb)

○Replace the washer [B] with a new one.

○Tighten the M7 bolts.

L = 85 mm (3.35 in.) [C]

L = 50 mm (1.97 in.) [D]

Torque - Crankcase Bolts (M7): 20 N·m (2.0 kgf·m, 15 ft·lb)

○Tighten the M6 bolts.

L = 68 mm (2.69 in.) [E]

L = 40 mm (1.57 in.) [F]

Torque - Crankcase Bolts (M6): 12 N·m (1.2 kgf·m, 106 in·lb)

● After tightening all crankcase bolts, check the following items.

○Wipe up the liquid gasket that seeps out around the crankcase mating surface.

○Crankshaft and transmission shafts turn freely.

○While spinning the output shaft, gears shift smoothly from the 1st to 6th gear, and 6th to 1st.

○When the output shaft stays still, the gear can not be shifted to 2nd gear or other higher gear positions.

● Install the removed parts (see appropriate chapters).

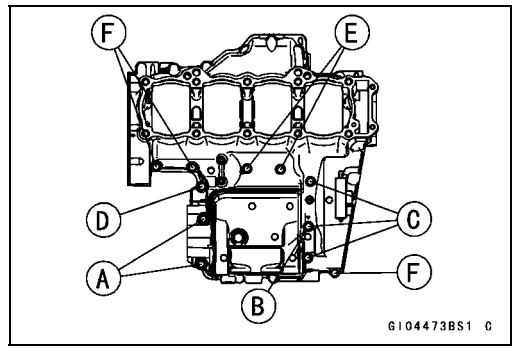

Crankshaft and Connecting Rods

Crankshaft Removal

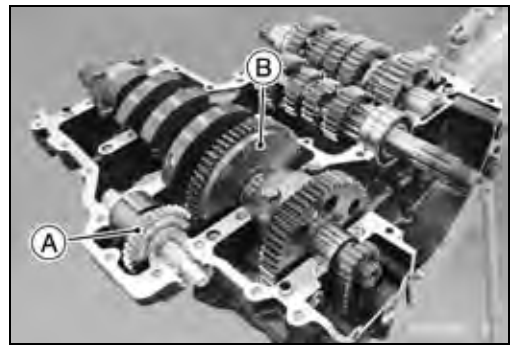

- Split the crankcase (see Crankcase Splitting).
- Remove:
  Connecting Rods (see Connecting Rod Removal)
  Balancer [A] (see Balancer Removal)
  Crankshaft [B]

Crankshaft Installation

NOTICE
If the crankshaft, bearing inserts, or crankcase halves are replaced with new ones, select the bearing inserts and check clearance with a plastigage (press gauge) before assembling engine to be sure the correct bearing inserts are installed.

- Apply molybdenum disulfide oil solution to the crankshaft main bearing inserts.
- Install the crankshaft with the camshaft chain [A] hanging on it.
- Install the removed parts (see appropriate chapters).

Connecting Rod Removal

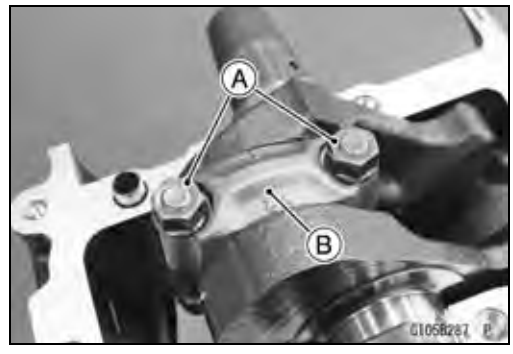

- Split the crankcase (see Crankcase Splitting).
- Remove:
  Connecting Rod Big End Nuts [A]
  Connecting Rod Big End Caps [B]

NOTE

○*Mark and record the locations of the connecting rods and their big end caps so that they can be reassembled in their original positions.*

- Remove the connecting rods from the crankshaft.

NOTICE
Discard the connecting rod bolts. To prevent damage to the crankpin surfaces, do not allow the connecting rod bolts to bump against the crankpins.

Crankshaft and Connecting Rods

Connecting Rod Installation

NOTICE
To minimize vibration, the connecting rods should have the same weight mark.

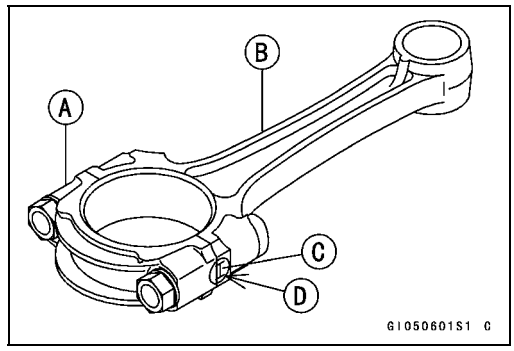

Big End Cap [A]
Connecting Rod [B]
Weight Mark, Alphabet [C]
Diameter Mark [D]: "○" or no mark

NOTICE
If the connecting rods, big end bearing inserts, or crankshaft are replaced with new ones, select the bearing insert and check clearance with a plastigage (press gauge) before assembling engine to be sure the correct bearing inserts are installed.

- Apply molybdenum disulfide oil solution [A] to the inner surfaces of upper and lower bearing inserts.
- Apply molybdenum disulfide grease to the connecting rod big end inside surface [B].
- Do not apply any grease or oil to the cap inside and cap insert outside [C].
- Install the inserts so that their nails [D] are on the same side and fit them into the recess of the connecting rod and cap.

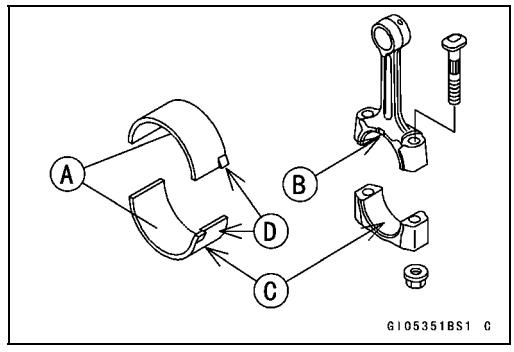

NOTICE
Wrong application of oil and grease could cause bearing damage.

○When installing the inserts [A], be careful not to damage the insert surface with the edge of the connecting rod [B] or the cap [C]. One way to install inserts is as follows.
Installation [D] to Cap
Installation [E] to Connecting Rod
Push [F]
Spare Dowel Pin [G]
Connecting Rod Bolts [H]

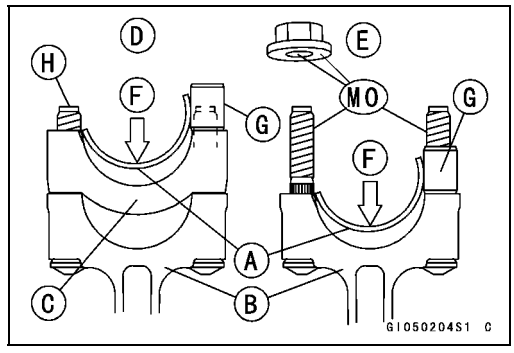

- Remove debris and clean the surface of inserts.
- Install the cap on the connecting rod, aligning the weight and diameter marks.
- Apply molybdenum disulfide oil solution [MO] to the threads and seating surfaces of the big end nuts and bolts.

Crankshaft and Connecting Rods

● Install each connecting rod on its original crankpin.
○The connecting rod big end is bolted using the “plastic region fastening method.”
○This method precisely achieves the needed clamping force without exceeding it unnecessarily, allowing the use of thinner, lighter bolts further decreasing connecting rod weight.
○There are two types of the plastic region fastening. One is a bolt length measurement method and other is a rotation angle method. Observe one of the following two, but the bolt length measurement method is preferable because this is a more reliable way to tighten the big end nuts.

NOTICE

The connecting rod bolts are designed to stretch when tightened. Never reuse the connecting rod bolts. See the table below for correct bolt and nut usage.

NOTICE

Be careful not to overtighten the nuts.
The bolts must be positioned on the seating surface correctly to prevent the bolt heads from hitting the crankcase.

(1) Bolt Length Measurement Method
● Be sure to clean the bolts, nuts, and connecting rods thoroughly with a high flash-point solvent, because the new connecting rods, bolts, and nuts are treated with an anti-rust solution.

⚠ WARNING

Gasoline and low flash-point solvents can be flammable and/or explosive and cause severe burns. Clean the bolts, nuts, and connecting rods in a well-ventilated area, and take care that there are no sparks or flame anywhere near the working area; this includes any appliance with a pilot light. Do not use gasoline or a low flash-point solvent to clean them.

NOTICE

Immediately dry the bolts and nuts with compressed air after cleaning.
Clean and dry the bolts and nuts completely.

Crankshaft and Connecting Rods

● Install new bolts and nuts in reused connecting rod.
★If the connecting rod assy was replaced, use the bolts and nuts attached to the new connecting rod assy.
● Apply a small amount of molybdenum disulfide oil solution to the following portions.
Threads [A] of Bolts and Nuts
Seating Surfaces [B] of Nuts and Connecting Rod Caps

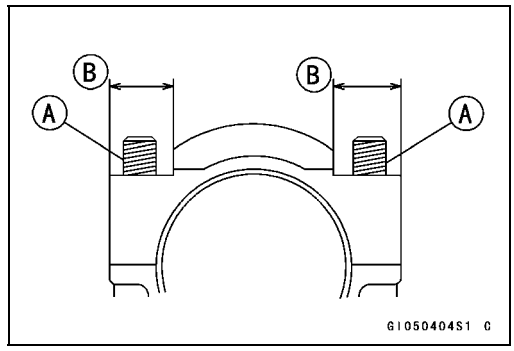

● Dent both bolt head and bolt tip with a punch as shown.
● Before tightening, use a point micrometer to measure the length of new connecting rod bolts and record the values to find the bolt stretch.
Connecting Rod [A]
Dent here with a punch [B].
Nuts [C]
Fit micrometer pins into dents [D].
● Tighten the big end nuts until the bolt elongation reaches the length specified in the table.

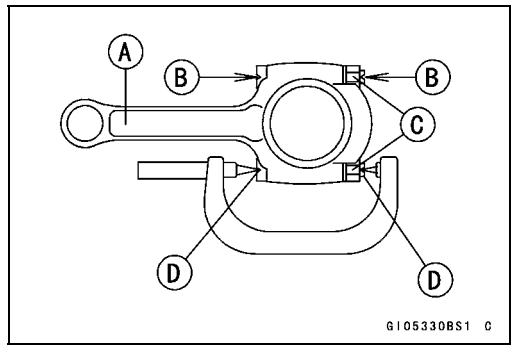

Bolt Length after tightening – Bolt Length before tightening = Bolt Stretch

Connecting Rod Assy	Bolt	Nut	Usable Range of Connecting Rod Bolt Stretch
New	Use the bolts attached to new con-rod.	Attached to new con-rod	0.20 ~ 0.32 mm (0.0079 ~ 0.0126 in.)
		New	
Used	Replace the bolts with new ones.	Used	0.24 ~ 0.36 mm (0.0094 ~ 0.0142 in.)
		New	

● Check the length of the connecting rod bolts.
★If the stretch is more than the usable range, the bolt has stretched too much. An overelongated bolt may break in use.

Crankshaft and Connecting Rods

(2) Rotation Angle Method

★If you do not have a point micrometer, you may tighten the nuts using the “Rotation Angle Method.”

● Be sure to clean the bolts, nuts and connecting rods thoroughly with a high flash-point solvent, because the new connecting rods, bolts and nuts are treated with an anti-rust solution.

⚠ WARNING

Gasoline and low flash-point solvents can be flammable and/or explosive and cause severe burns. Clean the bolts, nuts, and connecting rods in a well-ventilated area, and take care that there are no sparks or flame anywhere near the working area; this includes any appliance with a pilot light. Do not use gasoline or a low flash-point solvent to clean them.

NOTICE

Immediately dry the bolts and nuts with compressed air after cleaning.
Clean and dry the bolts and nuts completely.

● Install new bolts and nuts in reused connecting rods.

★If the connecting rod assy was replaced, use the bolts and nuts attached to the new connecting rod assy.

● Apply a small amount of molybdenum disulfide oil solution to the following portions.
Threads [A] of Bolts and Nuts
Seating Surfaces [B] of Nuts and Connecting Rod Caps

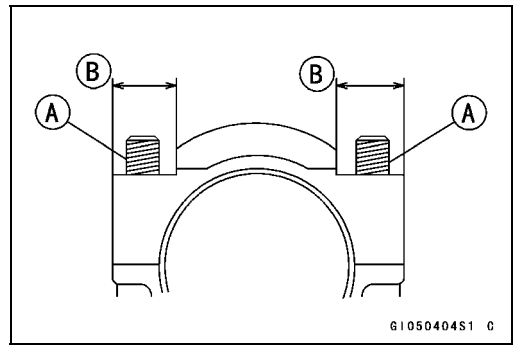

● First, tighten the nuts to the specified torque. See the table below.

● Next, tighten the nuts **120° ±5°** .

○Mark [A] the connecting rod big end caps and nuts so that nuts can be turned 120° [B] properly.

○Tighten the hexagon nut by 2 corners.

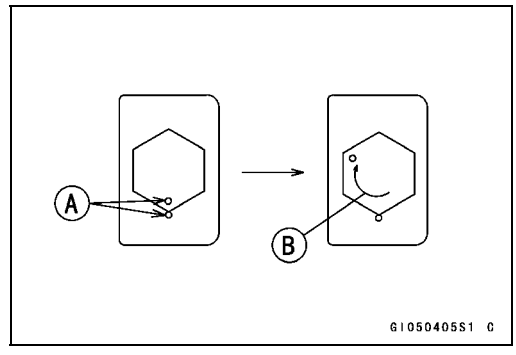

Connecting Rod Assy	Bolt	Nut	Torque + Angle N·m (kgf·m, ft·lb)
New	Use the bolts attached to new con-rod.	Attached to new con-rod	22 (2.2, 16) + 120°
		New	20 (2.0, 15) + 120°
Used	Replace the bolts with new ones.	Used	26 (2.7, 19) + 120°
		New	26 (2.7, 19) + 120°

Crankshaft and Connecting Rods

○The nuts can be tightened by using a torque angle gauge [A].

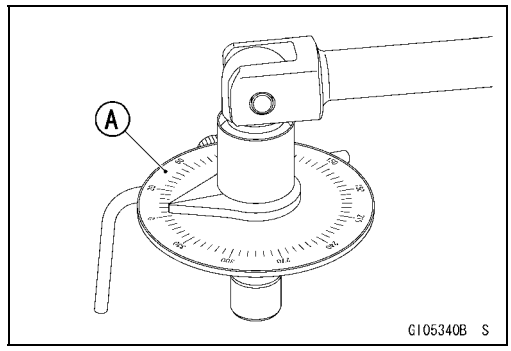

Crankshaft/Connecting Rod Cleaning

- After removing the connecting rods from the crankshaft, clean them with a high flash-point solvent.
- Blow the crankshaft oil passages with compressed air to remove any foreign particles or residue that may have accumulated in the passages.

Connecting Rod Bend Inspection

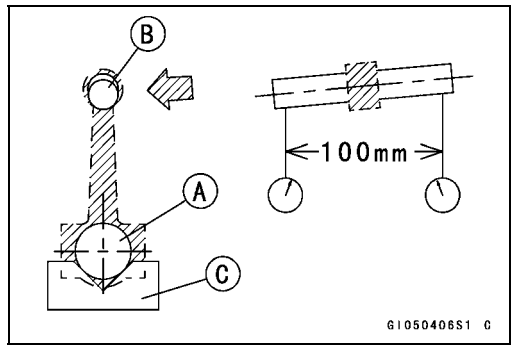

- Remove the connecting rod big end bearing inserts, and reinstall the connecting rod big end cap.
- Select an arbor [A] of the same diameter as the connecting rod big end, and insert the arbor through the connecting rod big end.
- Select an arbor of the same diameter as the piston pin and at least 100 mm (3.94 in.) long, and insert the arbor [B] through the connecting rod small end.
- On a surface plate, set the big-end arbor on V block [C].
- With the connecting rod held vertically, use a height gauge to measure the difference in the height of the arbor above the surface plate over a 100 mm (3.94 in.) length to determine the amount of connecting rod bend.

★If the connecting rod bend exceeds the service limit, the connecting rod must be replaced.

Connecting Rod Bend
Service Limit: TIR 0.2/100 mm (0.008/3.94 in.)

Connecting Rod Twist Inspection

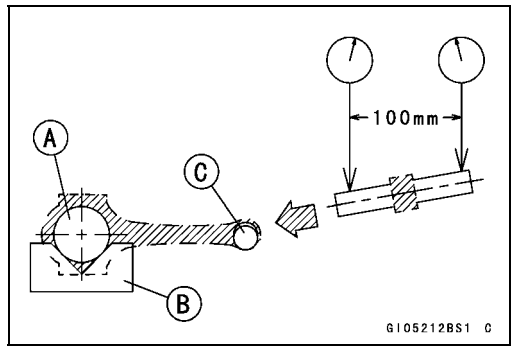

- With the big-end arbor [A] still on V block [B], hold the connecting rod horizontally and measure the amount that the arbor [C] varies from being paralleled with the surface plate over a 100 mm (3.94 in.) length of the arbor to determine the amount of connecting rod twist.

★If the connecting rod twist exceeds the service limit, the connecting rod must be replaced.

Connecting Rod Twist
Service Limit: TIR 0.2/100 mm (0.008/3.94 in.)

Crankshaft and Connecting Rods

Connecting Rod Big End Side Clearance Inspection

- Measure connecting rod big end side clearance.

○Insert a thickness gauge [A] between the big end and either crank web to determine clearance.

Connecting Rod Big End Side Clearance

Standard: 0.13 ~ 0.38 mm (0.0051 ~ 0.0150 in.)

Service Limit: 0.6 mm (0.02 in.)

★If the clearance exceeds the service limit, replace the connecting rod with new one and then check clearance again. If the clearance is too large after connecting rod replacement, the crankshaft also must be replaced.

Connecting Rod Big End Bearing Insert/Crankpin Wear Inspection

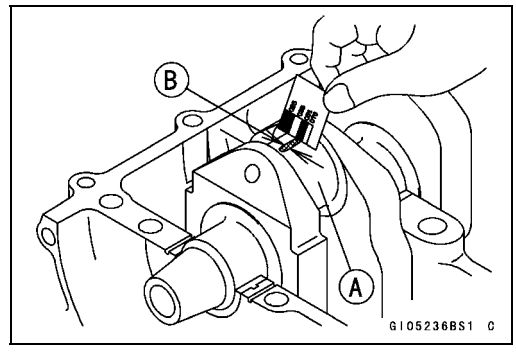

- Remove the connecting rod big end (see Connecting Rod Removal).
- Cut strips of plastigage (press gauge) to crankpin width. Place a strip on the crankpin parallel to the crankshaft installed in the correct position.
- Tighten the connecting rod big end nuts to the specified torque (see Connecting Rod Installation).

NOTE

○*Do not move the connecting rod and crankshaft during clearance measurement.*

- Remove the connecting rod big end again, measure each clearance between the bearing insert and crankpin [A] using plastigage (press gauge) [B].

NOTICE
After measurement, replace the connecting rod bolts.

Connecting Rod Big End Bearing Insert/Crankpin Clearance

Standard: 0.030 ~ 0.060 mm (0.0012 ~ 0.0024 in.)

Service Limit: 0.10 mm (0.0039 in.)

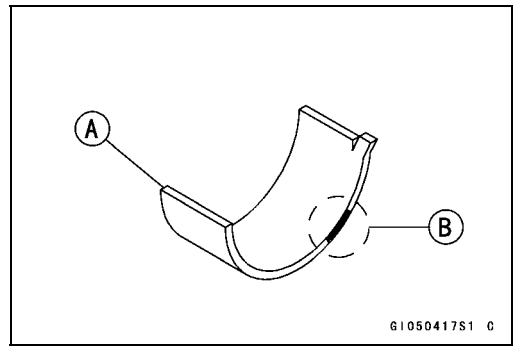

★If the clearance is within the standard, no bearing replacement is required.

★If the clearance is between 0.061 mm (0.0024 in.) and the service limit (0.10 mm, 0.0039 in.), replace the bearing inserts [A] with inserts painted blue [B]. Check insert/crankpin clearance with the plastigage. The clearance may exceed the standard slightly, but it must not be less than the minimum in order to avoid bearing seizure.

★If the clearance exceeds the service limit, measure the diameter of the crankpins.

Crankpin Diameter

Standard: 34.484 ~ 34.500 mm (1.3576 ~ 1.3583 in.)

Service Limit: 34.47 mm (1.357 in.)

Crankshaft and Connecting Rods

★If any crankpin has worn past the service limit, replace the crankshaft with a new one.

★If the measured crankpin diameters [A] are not less than the service limit, but do not coincide with the original diameter markings [B] on the crankshaft, make new marks on it.

Crankpin Diameter Marks

None	**34.484 ~ 34.492 mm (1.3576 ~ 1.35795 in.)**
○	**34.493 ~ 34.500 mm (1.35799 ~ 1.3583 in.)**

△: Crankpin Diameter Marks, "○" or no mark.

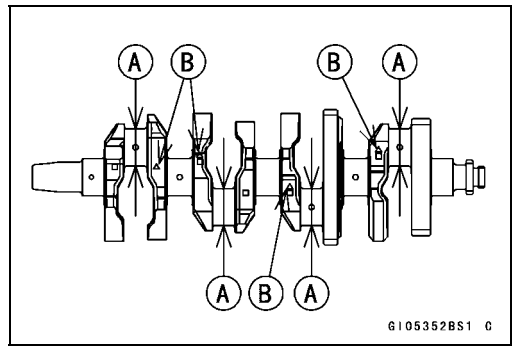

Crankshaft and Connecting Rods

- Measure the connecting rod big end inside diameter, and mark each connecting rod big end in accordance with the inside diameter.
- Tighten the connecting rod big end nuts to the specified torque (see Connecting Rod Installation).

NOTE

○*The mark already on the big end should almost coincide with the measurement.*

Connecting Rod Big End Inside Diameter Marks

None 37.500 ~ 37.508 mm (1.4764 ~ 1.47669 in.)

○ 37.509 ~ 37.516 mm (1.47673 ~ 1.4770 in.)

Big End Cap [A]
Connecting Rod [B]
Weight Mark, Alphabet [C]
Diameter Mark (Around Weight Mark) [D]: "○" or no mark

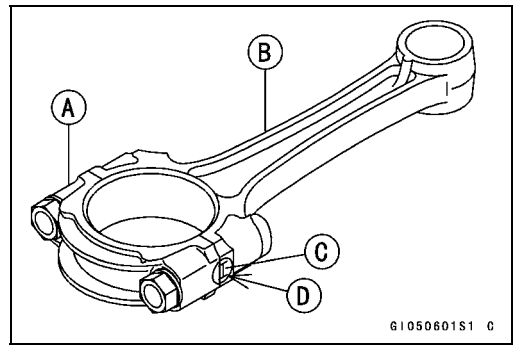

- Select the proper bearing insert [A] in accordance with the combination of the connecting rod and crankshaft coding.
  Size Color [B]

Con-rod Big End Inside Diameter Marking	Crankpin Diameter Marking	Bearing Insert	
		Size Color	Part Number
None	○	Brown	92139-0124
None	None	Black	92139-0123
○	○		
○	None	Blue	92139-0122

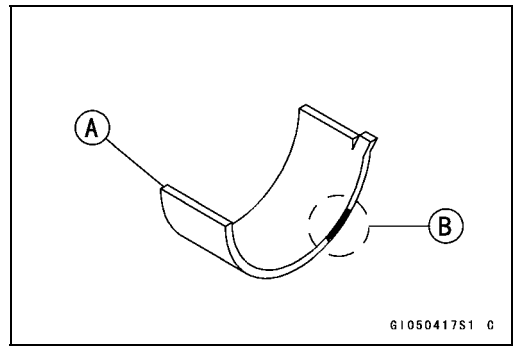

- Install the new inserts in the connecting rod and check insert/crankpin clearance with the plastigage.

Crankshaft Side Clearance Inspection

- Insert a thickness gauge [A] between the crankcase main bearing and the crank web at the #3 journal to determine clearance.

★If the clearance exceeds the service limit, replace the crankcase halves as a set.

NOTE

○*The upper and lower crankcase halves are machined at the factory in the assembled state, so the crankcase halves must be replaced as a set.*

Crankshaft Side Clearance

Standard: 0.09 ~ 0.19 mm (0.0035 ~ 0.0075 in.)

Service Limit: 0.39 mm (0.0154 in.)

Crankshaft and Connecting Rods

Crankshaft Runout Inspection

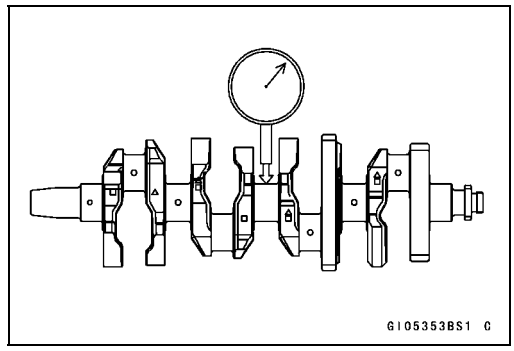

- Measure the crankshaft runout.

★If the measurement exceeds the service limit, replace the crankshaft.

Crankshaft Runout

Standard: TIR 0.02 mm (0.0008 in.) or less

Service Limit: TIR 0.05 mm (0.0020 in.)

Crankshaft Main Bearing Insert/Journal Wear Inspection

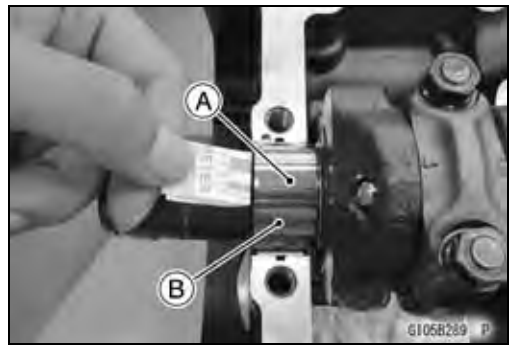

- Split the crankcase (see Crankcase Splitting).
- Cut strips of plastigage (press gauge) to journal width.
- Place a strip on each journal parallel to the crankshaft installed in the correct position.
- Tighten the crankcase bolts to the specified torque (see Crankcase Assembly).

NOTE

○*Do not turn the crankshaft during clearance measurement.*

○*Journal clearance less than 0.025 mm (0.00098 in.) can not be measured by plastigage [A], however, using genuine parts maintains the minimum standard clearance.*

- Split the crankcase again, measure each clearance between the bearing insert and journal [B] using plastigage (press gauge).

Crankshaft Main Bearing Insert/Journal Clearance

Standard: 0.010 ~ 0.034 mm (0.0004 ~ 0.0013 in.)

Service Limit: 0.06 mm (0.0024 in.)

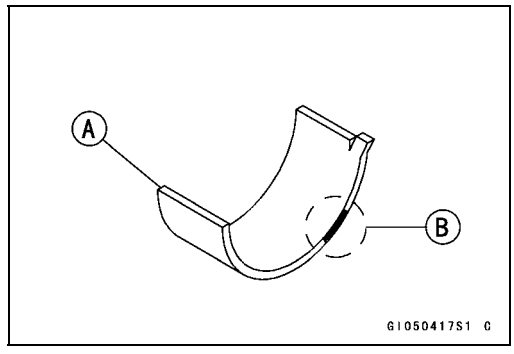

★If the clearance is within the standard, no bearing replacement is required.

★If the clearance is between 0.035 mm (0.0014 in.) and the service limit (0.06 mm, 0.0024 in.), replace the bearing inserts [A] with inserts painted blue [B]. Check insert/journal clearance with the plastigage. The clearance may exceed the standard slightly, but it must not be less than the minimum in order to avoid bearing seizure.

★If the clearance exceeds the service limit, measure the diameter of the crankshaft main journal.

Crankshaft and Connecting Rods

Crankshaft Main Journal Diameter

Standard: 34.984 ~ 35.000 mm (1.3773 ~ 1.3780 in.)

Service Limit: 34.96 mm (1.376 in.)

★If any journal has worn past the service limit, replace the crankshaft with a new one.

★If the measured journal diameters [A] are not less than the service limit, but do not coincide with the original diameter markings [B] on the crankshaft, make new marks on it.

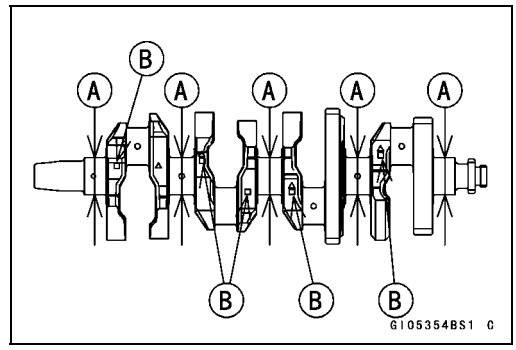

Crankshaft Main Journal Diameter Marks

None 34.984 ~ 34.992 mm (1.3773 ~ 1.3776 in.)

1 34.993 ~ 35.000 mm (1.3777 ~ 1.3780 in.)

□: Crankshaft Main Journal Diameter Marks, “1” or no mark.

● Measure the main bearing inside diameter, and mark the upper crankcase half in accordance with the inside diameter.

Crankcase Main Bearing Inside Diameter Marks: “○” or no mark.

● Tighten the crankcase bolts to the specified torque (see Crankcase Assembly).

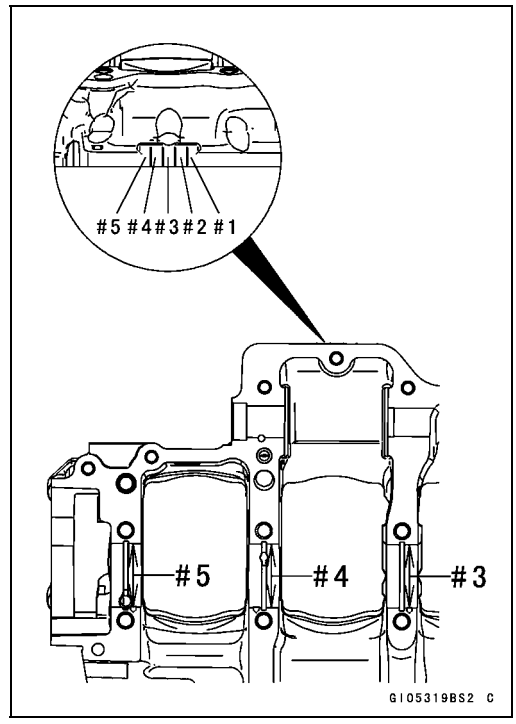

NOTE

○*The mark already on the upper crankcase half should almost coincide with the measurement.*

Crankcase Main Bearing Inside Diameter Marks

○ 38.000 ~ 38.008 mm (1.4961 ~ 1.49637 in.)

None 38.009 ~ 38.016 mm (1.49641 ~ 1.4967 in.)

● Select the proper bearing insert [A] in accordance with the combination of the crankcase and crankshaft coding.

Size Color [B]

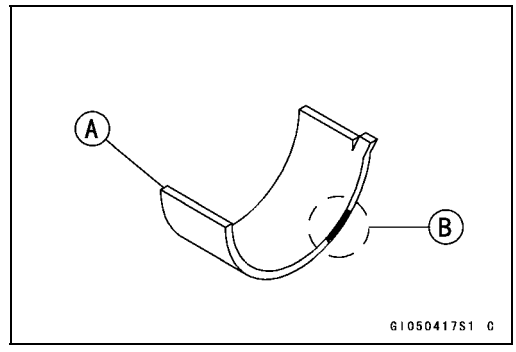

Crankshaft and Connecting Rods

Crankcase Main Bearing Inside Diameter Marking	Crankshaft Main Journal Diameter Marking	Bearing Insert*		
		Size Color	Part Number	Journal Nos.
○	1	Brown	92139-0034	2, 4
			92139-0219	1, 3, 5
None	1	Black	92139-0033	2, 4
○	None		92139-0218	1, 3, 5
None	None	Blue	92139-0032	2, 4
			92139-0217	1, 3, 5

* The bearing inserts for Nos. 2 and 4 journals have an oil groove, respectively.

● Install the new inserts in the crankcase halves and check insert/journal clearance with the plastigage.

Balancer

Balancer Removal

- Split the crankcase (see Crankcase Splitting).
- Remove:
  Oil Seal [A]
  Balancer [B]

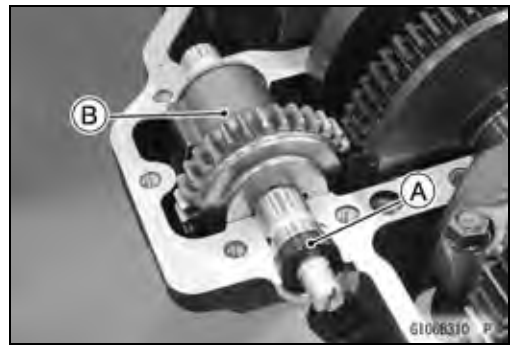

Balancer Installation

- Check that the rubber dampers [A] are in place as shown.

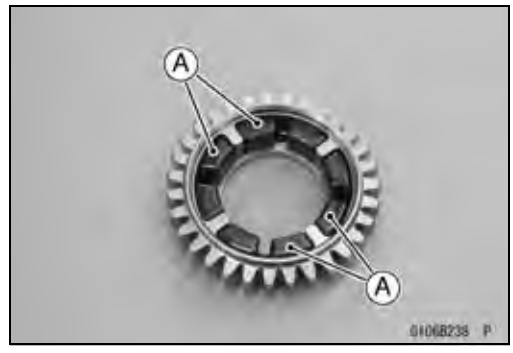

- Apply molybdenum disulfide oil solution to the damper contact portions of the balancer weight [A].
- Install the balancer weight into the gear [B].

○Align the punch mark [C] of the balancer weight with the groove [D] of the gear.

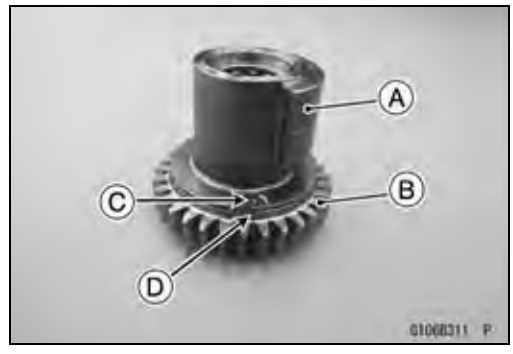

- Apply molybdenum disulfide oil solution to the needle bearings. Insert the needle bearings.
- Fit the washers [A] on both ends of the weight and gear assembly. The projected sides [B] face inward.

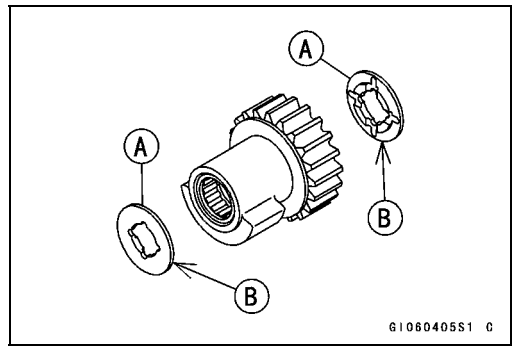

- Insert the pin [A] as shown.
- Set the balancer on the upper crankcase half.

○Align the punch mark [B] on the balancer gear [C] with the mark [D] on the balancer drive gear [E] of crankshaft.

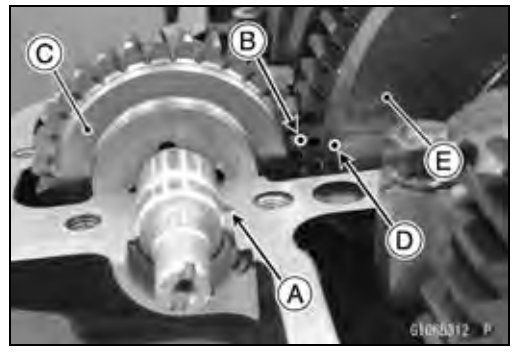

Balancer

- Assemble the crankcase (see Crankcase Assembly).
- Fill the oil seal lips with grease.
- Install the new oil seal [A] so that its surface is flush with the surface of the crankcase.
- Install the balancer shaft clamp lever [B].
- Apply a non-permanent locking agent to the threads of the balancer shaft clamp lever bolt [C].
- Tighten:

Torque - Balancer Shaft Clamp Lever Bolt: 25 N·m (2.5 kgf·m, 18 ft·lb)

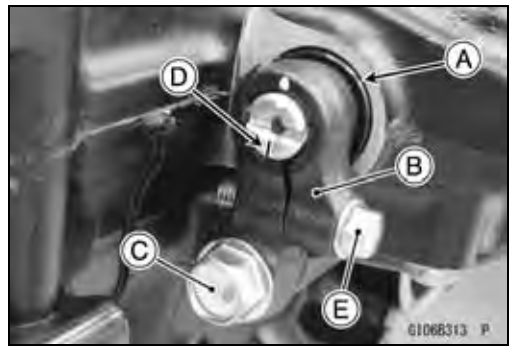

- Turn the balancer shaft so that its mark [D] faces downward.
- Check that the balancer shaft clamp lever is in contact with the oil seal.
- Tighten:

Torque - Balancer Shaft Clamp Bolt [E]: 9.8 N·m (1.0 kgf·m, 87 in·lb)

Balancer Adjustment

- Start the engine and warm it up thoroughly.
- Adjust the balancer gear backlash with the engine idling. The amount of backlash can be changed by turning the balancer shaft which has eccentric journals.

○Start the engine and let it idle.

○Loosen the clamp bolt [A] and turn the balancer shaft [B] clockwise [C] until the balancer gear makes a whining sound.

○Turn the shaft counterclockwise [D] until the balancer gear whining sound disappears and tighten the clamp bolt.

Torque - Balancer Shaft Clamp Bolt: 9.8 N·m (1.0 kgf·m, 87 in·lb)

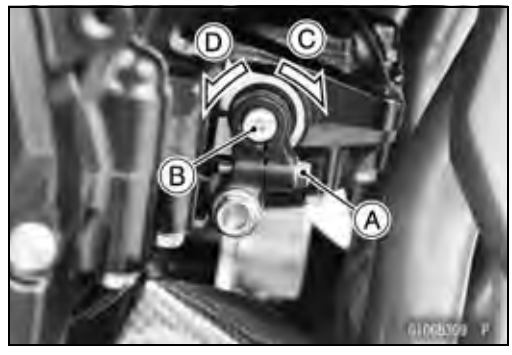

Balancer Damper Inspection

- Remove the balancer and disassemble the weight and gear assembly.
- Visually inspect the rubber dampers [A].

★If they appear damaged or deteriorated, replace them.

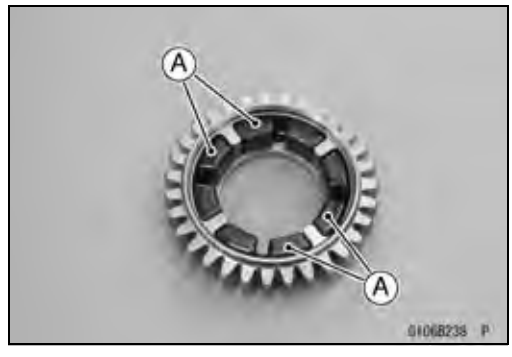

Starter Motor Clutch

Starter Motor Clutch Removal/Installation

● Refer to the Starter Motor Clutch Disassembly/Assembly.

Starter Motor Clutch Disassembly

● Remove the alternator rotor (see Alternator Rotor Removal in the Electrical System chapter).

● Hold the alternator rotor with the flywheel holder [A].

Special Tool - Flywheel Holder: 57001-1313

● Remove the starter motor clutch bolts [B].

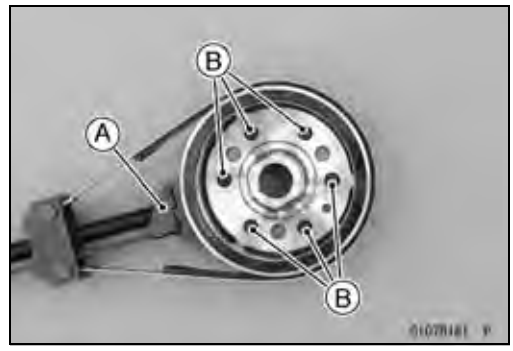

● Remove:
Starter Motor Clutch Housing [A]
Starter Motor Clutch [B]

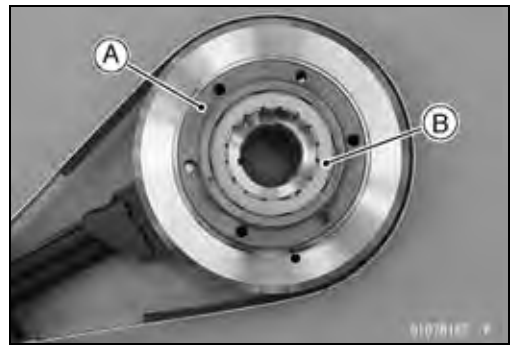

Starter Motor Clutch Assembly

● Install the starter motor clutch to the housing so that the flange [A] fit to the housing groove [B].

● Hold the alternator rotor with the flywheel holder.

Special Tool - Flywheel Holder: 57001-1313

● Apply a non-permanent locking agent to the threads of the starter motor clutch bolts and tighten them.

Torque - Starter Motor Clutch Bolts: 12 N·m (1.2 kgf·m, 106 in·lb)

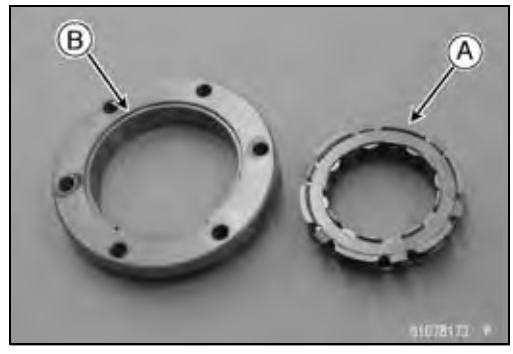

Starter Motor Clutch Inspection

● Remove:
Alternator Cover (see Alternator Cover Removal in the Electrical System chapter)
Starter Idle Gear and Shaft

● Turn the starter motor clutch gear [A] by hand. The starter motor clutch gear should turn clockwise [B] freely, but should not turn counterclockwise [C].

★If the starter motor clutch does not operate as it should or if it makes noise, go to the next step.

● Disassemble the starter motor clutch, and visually inspect the clutch parts.

★If there is any worn or damaged part, replace it.

NOTE

○*Examine the starter motor clutch gear as well. Replace it if it worn or damaged.*

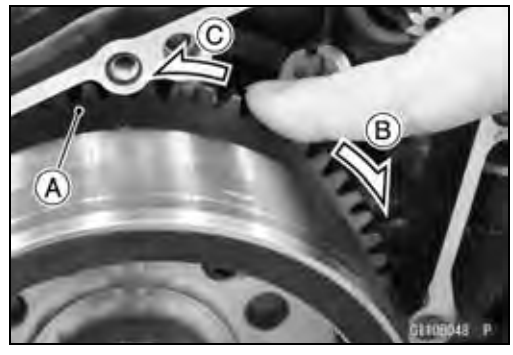

External Shift Mechanism

Shift Pedal Removal

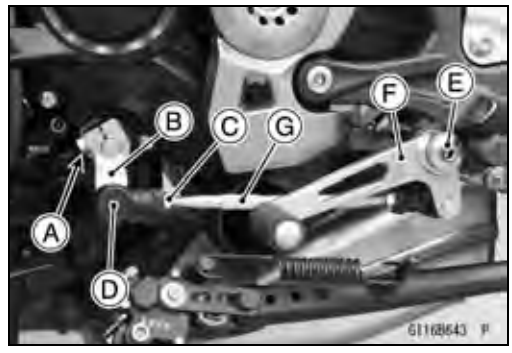

- Remove:
  Shift Lever Bolt [A]
  Shift Lever [B]

★If the tie-rod is removed from the shift pedal and shift lever, note the following.

○The following portions have left-hand threads.
  Locknut [C] of Shift Lever Side
  Ball Joint [D] of Shift Lever

- Remove:
  Shift Pedal Mounting Bolt [E]
  Shift Pedal [F] with Tie-Rod [G]
  Washer

Shift Pedal Installation

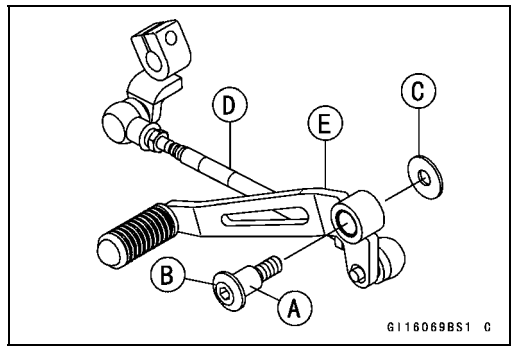

- Apply grease to the sliding surface [A] on the shift pedal mounting bolt [B].
- Install:
  Washer [C]
  Tie-Rod [D] and Shift Pedal [E]
- Tighten:

Torque - Shift Pedal Mounting Bolt: 25 N·m (2.5 kgf·m, 18 ft·lb)

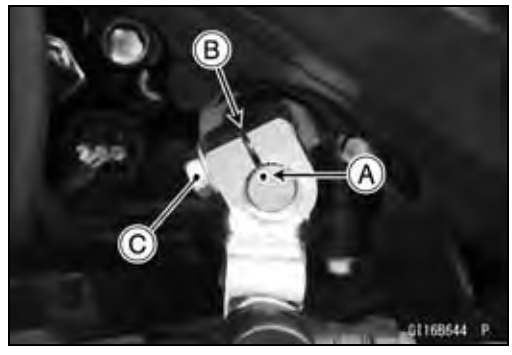

- Align the punch mark [A] on the shift shaft with the slit [B] of the shift lever.
- Apply a non-permanent locking agent to the threads of the shift lever bolt [C] and tighten it.

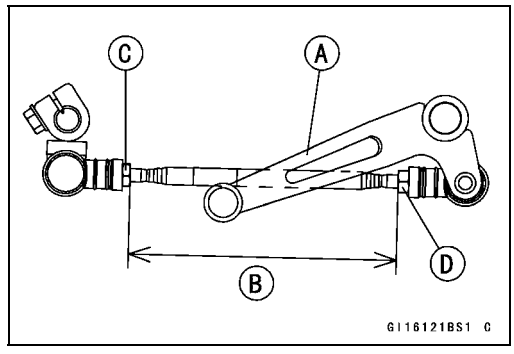

- After installation, confirm that the shift pedal [A] is positioned as shown.
  123 mm (4.843 in.) [B]

★If the pedal position is different, adjust it as follows.

○To adjust the pedal position, loosen the front locknut [C] (left-hand threads) and rear locknut [D], and then turn the tie-rod [E].

○Tighten the locknuts securely.

External Shift Mechanism

External Shift Mechanism Removal

● Remove:
Engine Sprocket Cover (see Engine Sprocket Removal in the Final Drive chapter)
Shift Lever (see Shift Pedal Removal)
Clutch (see Clutch Removal in the Clutch chapter)
Circlip [A]
Washer [B]

Special Tool - Outside Circlip Pliers: 57001-144

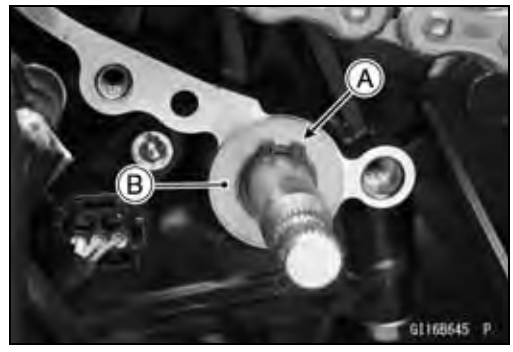

● Remove the shift shaft assembly [A].

● Remove:
Gear Positioning Lever Bolt [A]
Gear Positioning Lever [B]
Collar and Spring [C]

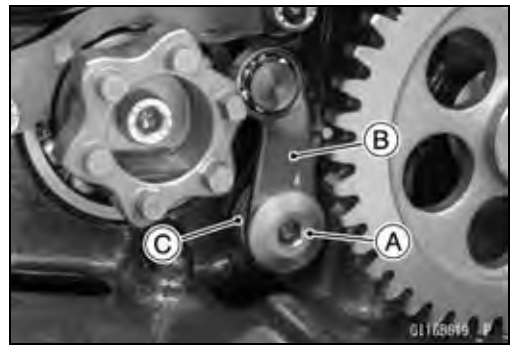

External Shift Mechanism Installation

● Assemble the following parts as shown.
Gear Positioning Lever [A]
Spring [B]
Collar [C]
Gear Positioning Lever Bolt [D]
○Hang the spring end [E] to the gear positioning lever.

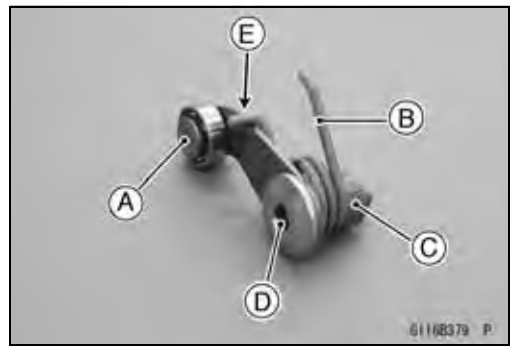

● While prying the gear positioning lever [A], tighten the gear positioning lever bolt [B].

Torque - Gear Positioning Lever Bolt: 12 N·m (1.2 kgf·m, 106 in·lb)

External Shift Mechanism

● Apply grease to the lips of the oil seal [A].

● Install the shift shaft [A] so that the return spring pin [B] fits between the spring [C].

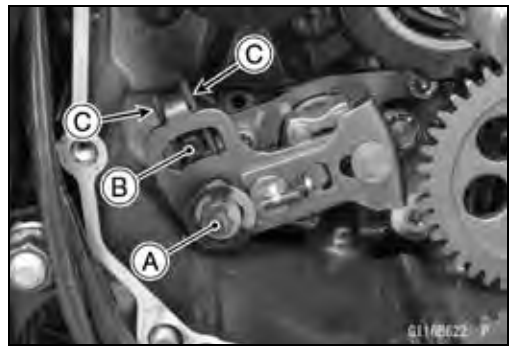

● Install the washer [A].
● Replace the circlip [B] with a new one, and install it.

Special Tool - Outside Circlip Pliers: 57001-144

○Fit the circlip into the groove of the shift shaft securely.
● Install the removed parts (see appropriate chapters).

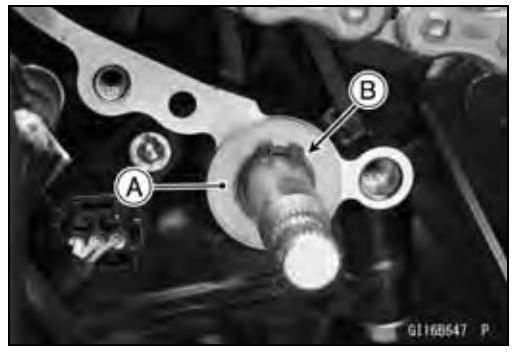

External Shift Mechanism Inspection

● Examine the shift shaft [A] for any damage.
★If the shaft is bent, straighten or replace it.
★If the serration [B] are damaged, replace the shaft.
★If the springs [C] are damaged in any way, replace them.
★If the shift mechanism arm [D] is damaged in any way, replace the shift shaft.

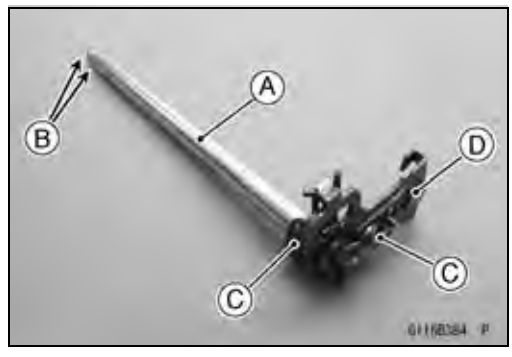

● Check the return spring pin [A] is not loose.
★If it is loose, unscrew it, apply a non-permanent locking agent to the threads, and tighten it.

Torque - Shift Shaft Return Spring Pin: 39 N·m (4.0 kgf·m, 29 ft·lb)

External Shift Mechanism

- Check the gear positioning lever [A] and its spring for breaks or distortion.

★If the lever or spring are damaged in any way, replace them.

- Visually inspect the shift drum cam [B].

★If it is badly worn or shows any damage, replace it.

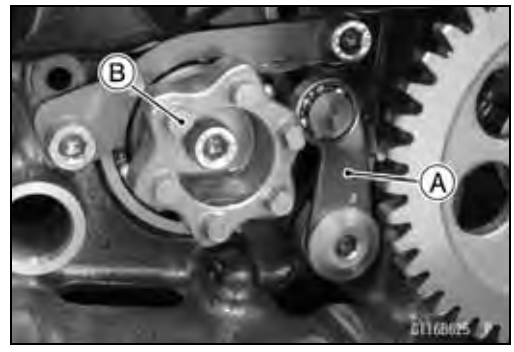

Transmission

Transmission Shaft Removal

- Split the crankcase (see Crankcase Splitting).
- Remove the drive shaft [A] and output shaft [B].

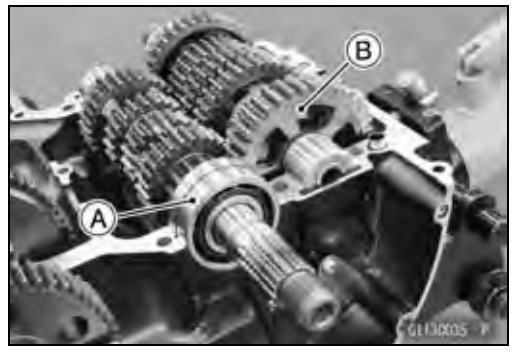

Transmission Shaft Installation

- Check to see that the set pins [A] and set rings [B] are in place.

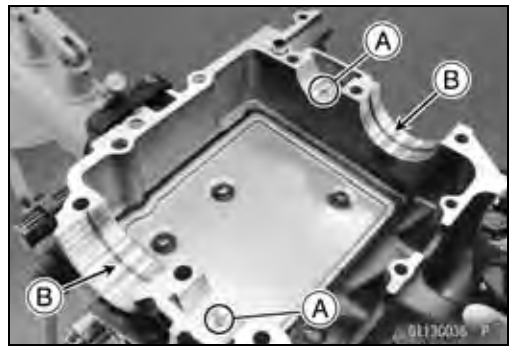

- Apply molybdenum disulfide oil solution to the transmission gears.
- Install the drive shaft and output shaft into the upper crankcase half.
- Apply engine oil to the bearings.

○The bearing set pins and rings must match properly with the holes or grooves in the bearing outer races or bearings. When they are properly matched, there is no clearance [A] between the crankcase and the bearing outer races or bearings.

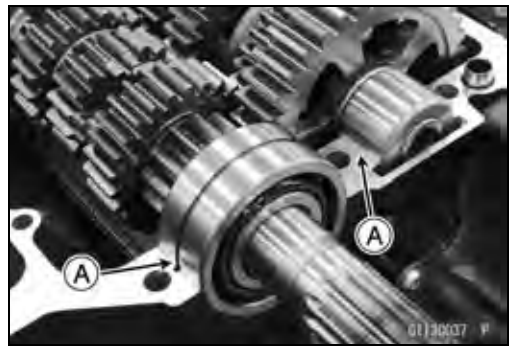

- Assemble the crankcase (see Crankcase Assembly).
- Replace the oil seal [A] with a new one.
- Apply grease to the oil seal lips and the inner circumference of the oil seal.
- Apply soap and water solution to the outer circumference of the oil seal so that it will go into place smoothly.
- Press in the oil seal into the crankcase so that the surface of the oil seal is flush with the surface [B] of the crankcase.

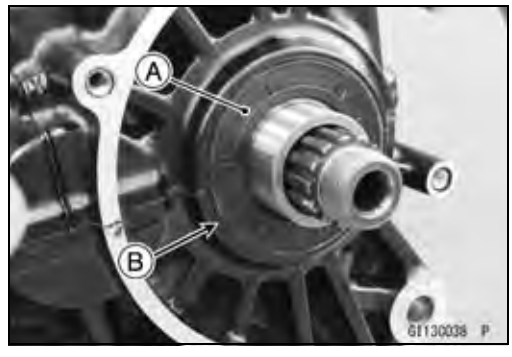

Transmission Shaft Disassembly

- Remove the transmission shafts (see Transmission Shaft Removal).
- Remove the circlips, and disassemble the transmission shafts.

Special Tool - Outside Circlip Pliers: 57001-144

- The 5th gear [A] on the output shaft has three steel balls assembled into it for the positive neutral finder mechanism. Remove the 5th gear.

○Set the output shaft in a vertical position holding the 3rd gear [B].

○Spin the 5th gear quickly [C] and pull it off upward.

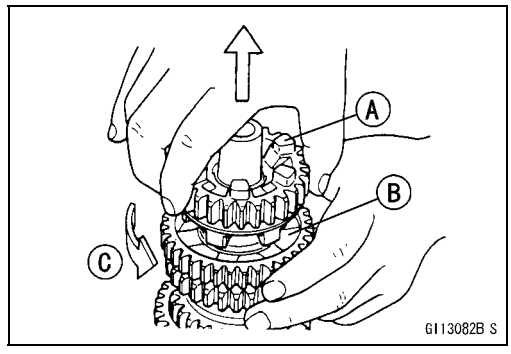

Transmission

- Remove the ball bearing [A] from each shafts and collar [B] from output shaft.

  Special Tools - Bearing Puller [C]: 57001-135
  Bearing Puller Adapter [D]: 57001-317

- Discard the bearing and collar (output shaft).

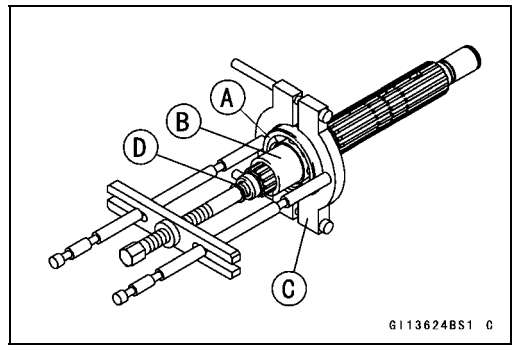

Transmission Shaft Assembly

- Install the new ball bearing [A] on the each shaft, using the bearing driver.

  Spacial Tool - Bearing Driver, ϕ32: 57001-382

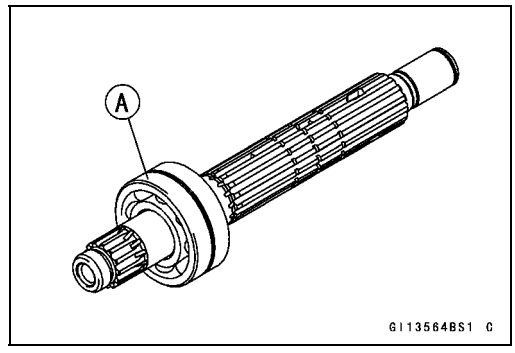

- Install the collar [A] on the output shaft, using the bearing driver.

  Special Tool - Bearing Driver, ϕ32: 57001-382

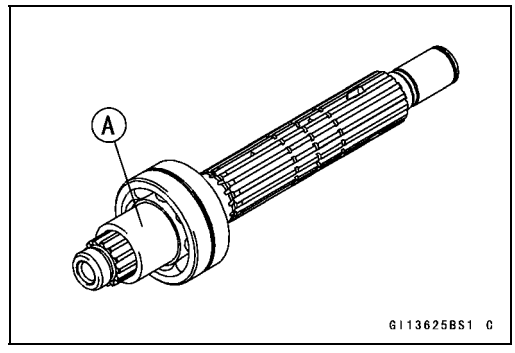

- Apply engine oil to the bushings, ball bearings and shafts.
- Install the gear bushings [A] on the shaft with their holes [B] aligned.

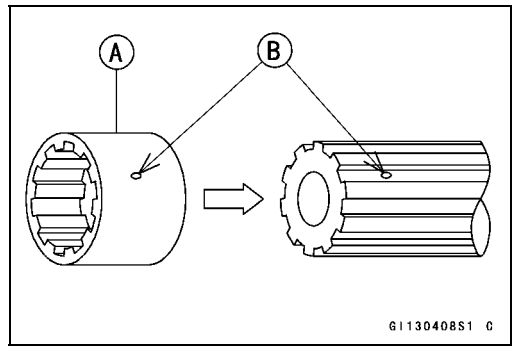

- Replace any circlips removed with new ones.
- Install the circlips [A] so that the opening [B] is aligned with a spline groove [C].

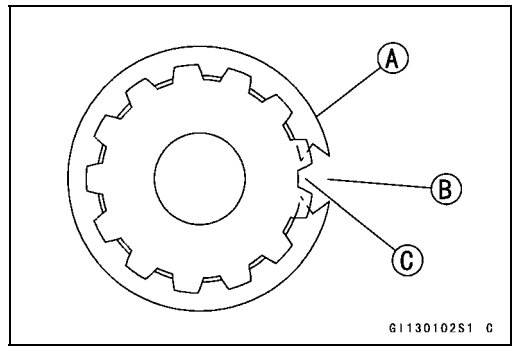

Transmission

- The drive shaft gears can be recognized by size: the gear with the smallest diameter is 1st gear, and the largest one is 6th gear. Be sure that all parts are put back in the correct sequence and all circlips and washers are properly in place.
- Install the 3rd/4th gear onto the drive shaft with their oil holes aligned.
- Install the 5th and 6th gear bushings onto the drive shaft with their oil holes aligned.
- The output shaft gears can be recognized by size: the gear with the largest diameter is 1st gear, and the smallest one is 6th gear. Be sure that all parts are put back in the correct sequence and all circlips and washers are properly in place.
- Install the 6th gear onto the output shaft with their oil holes aligned.
- Install the 2nd and 3rd/4th gear bushings onto the output shaft with their oil holes aligned.

NOTE

○*When the toothed washers are assembled onto the each shaft, note the following.*
○*Align the punch marks [A] of the toothed washers (only on drive shaft).*
○*When the tangs [B] of the toothed washer shall be assembled, they should be installed into the notch [C] of the toothed washer.*

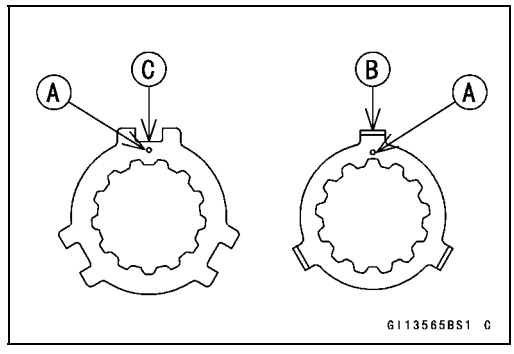

- Fit the steel balls into the 5th gear holes in the output shaft, aligning the holes as shown.
  5th Gear [A]
  Output Shaft [B]
  Steel Balls [C]

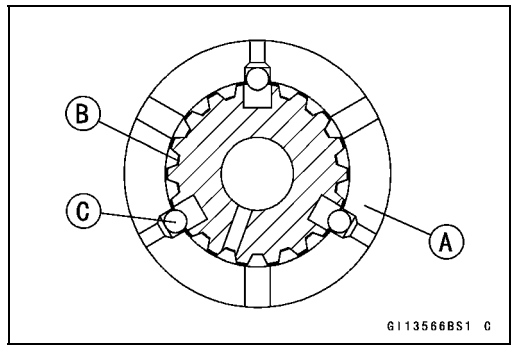

NOTICE

Do not apply grease to the balls to hold them in place. This will cause the positive neutral finder mechanism to malfunction.

○After assembling the 5th gear with steel balls in place on the output shaft, check the ball-locking effect that the 5th gear doesn't come out of the output shaft when moving it up and down by hand.
- Check that each gear spins or slides freely on the transmission shafts without binding after assembly.

Transmission

This page intentionally left blank.

Transmission

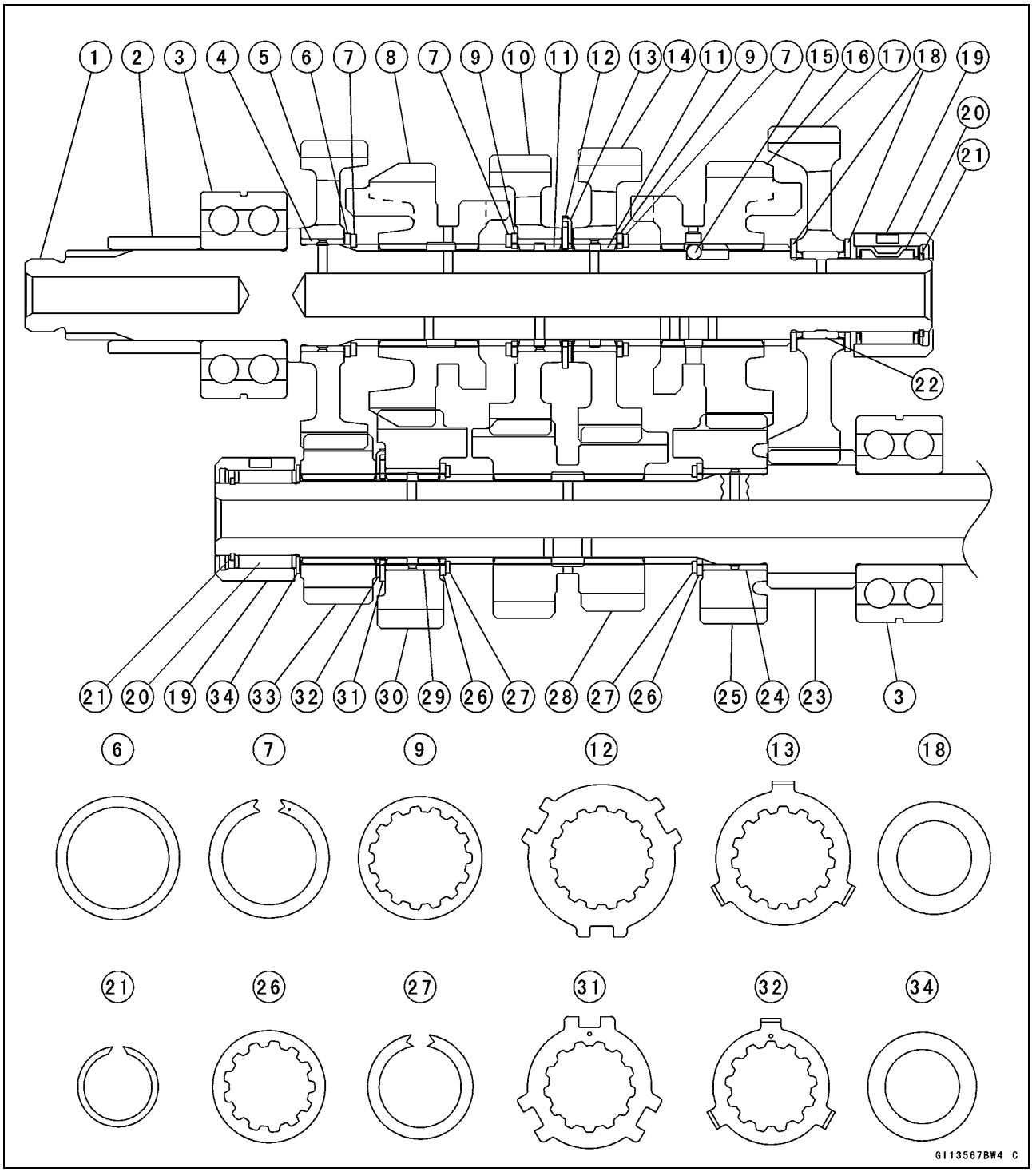

Transmission

1. Output Shaft
2. Collar
3. Ball Bearings
4. Bushing
5. 2nd Gear (39 T)
6. Washer (ϕ34 × ϕ28.1)
7. Circlips (ϕ33 × ϕ25.9)
8. Top Gear (31 T)
9. Toothed Washer (ϕ34)
10. 4th Gear (25 T)
11. Bushings
12. Toothed Washer (ϕ40.5)
13. Toothed Washer (ϕ37)
14. 3rd Gear (24 T)
15. Steel Balls
16. 5th Gear (26 T)
17. Low Gear (39 T)
18. Washers (ϕ31 × ϕ20.5)
19. Races
20. Needle Bearings
21. Circlips (ϕ22.2 × ϕ18.7)
22. Needle Bearing
23. Low Gear (15 T) (Drive Shaft)
24. Bushing
25. 5th Gear (21 T)
26. Toothed Washers (ϕ31)
27. Circlips (ϕ29 × ϕ22.6)
28. 3rd/4th Gear (15 T/18 T)
29. Bushing
30. Top Gear (28 T)
31. Toothed Washer (ϕ34.2)
32. Toothed Washer (ϕ32)
33. 2nd Gear (20 T)
34. Washer (ϕ30 × ϕ20.5)

Transmission

Shift Drum and Fork Removal

NOTICE
Never drop the shift drum, especially on a hard surface. Such a shock to the shift drum can damage it.

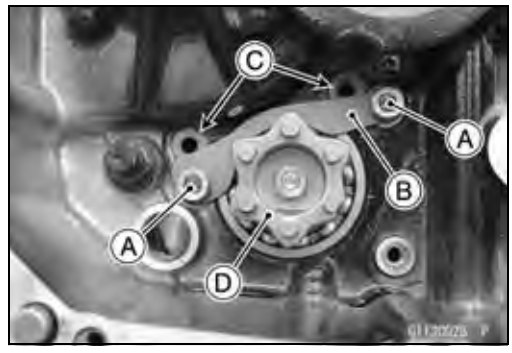

- Remove:
  Lower Crankcase Half (see Crankcase Splitting)
  Transmission Shafts (see Transmission Shaft Removal)
  Gear Positioning Lever (see External Shift Mechanism Removal)
  Shift Drum Bearing Holder Bolts [A]
  Shift Drum Bearing Holder [B]
- Pull out the shift rods [C], and remove the shift forks.
- Pull out the shift drum [D].

Shift Drum and Fork Installation

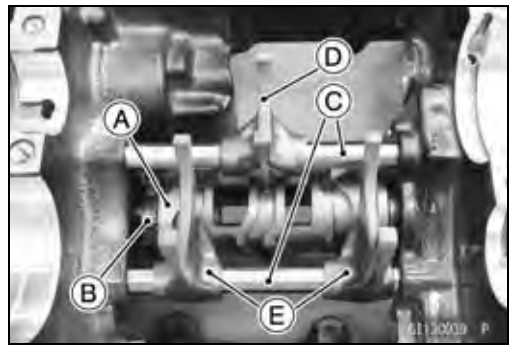

- Apply engine oil to the shift drum, forks and rods.
- Install the shift drum [A].
  ○Take care not to damage the magnet part [B] of the shift drum.
- Install the shift rods [C] and shift forks, note the following.
  ○The rods are identical.
  ○Position the one with shortest ears [D] on the drive shaft and place the pin in the center groove in the shift drum.
  ○The two forks [E] on the output shaft are identical.
  ○Install the forks so that its “0061” and “0062” side faces engine left side.
- Apply a non-permanent locking agent to the threads of the shift drum bearing holder bolts, and tighten them.

  Torque - Shift Drum Bearing Holder Bolts: 12 N·m (1.2 kgf·m, 106 in·lb)
- Install the removed parts (see appropriate chapters).

Shift Drum Disassembly

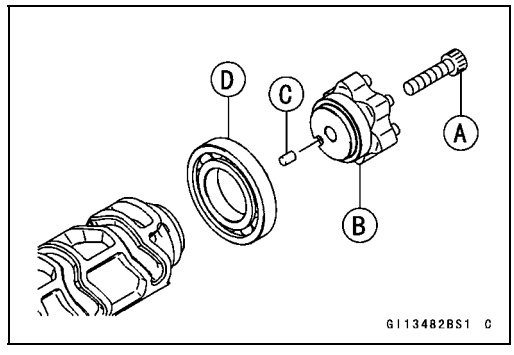

- Remove the shift drum (see Shift Drum and Fork Removal).
- While holding the shift drum with a vise, remove the shift drum cam holder bolt [A].
- Remove:
  Shift Drum Cam [B]
  Dowel Pin [C]
  Ball Bearing [D]

Transmission

Shift Drum Assembly

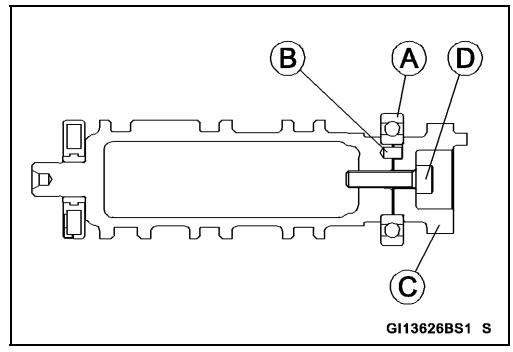

- Install:
  Ball Bearing [A]
  Dowel Pin [B] and Shift Drum Cam [C]

○Align the pin with the groove in the shift drum cam.

- Apply a non-permanent locking agent to the threads of the shift drum cam holder bolt [D] and tighten it.

Torque - Shift Drum Cam Holder Bolt: 12 N·m (1.2 kgf·m, 106 in·lb)

Shift Fork Bending Inspection

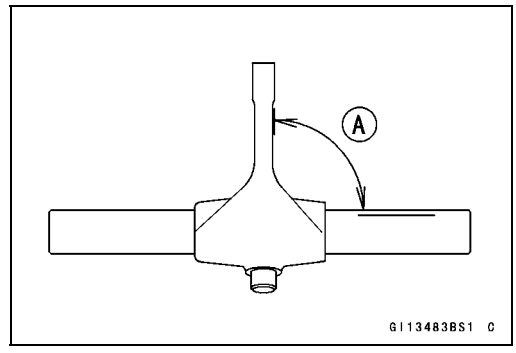

- Visually inspect the shift forks, and replace any fork that is bent. A bent fork could cause difficulty in shifting, or allow the transmission to jump out of gear when under power.
  90° [A]

Shift Fork/Gear Groove Wear Inspection

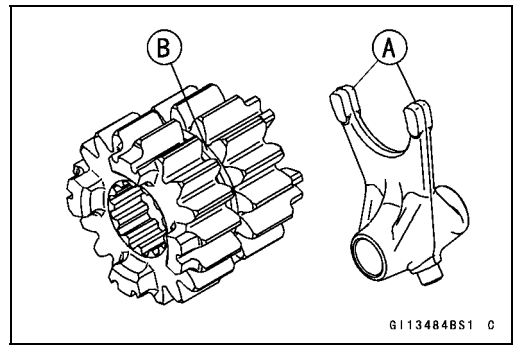

- Measure the thickness of the shift fork ears [A], and measure the width of the gear grooves [B].

★If the thickness of a shift fork ear is less than the service limit, the shift fork must be replaced.

Shift Fork Ear Thickness
Standard: 5.9 ~ 6.0 mm (0.232 ~ 0.236 in.)
Service Limit: 5.8 mm (0.228 in.)

★If the gear groove is worn over the service limit, the gear must be replaced.

Gear Groove Width
Standard: 6.05 ~ 6.15 mm (0.238 ~ 0.242 in.)
Service Limit: 6.3 mm (0.25 in.)

Shift Fork Guide Pin/Drum Groove Wear Inspection

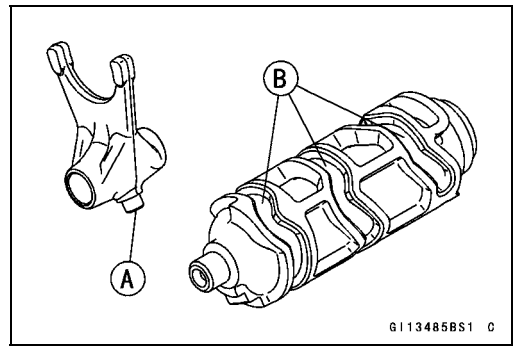

- Measure the diameter of each shift fork guide pin [A], and measure the width of each shift drum groove [B].

★If the guide pin on any shift fork is less than the service limit, the fork must be replaced.

Shift Fork Guide Pin Diameter
Standard: 6.9 ~ 7.0 mm (0.272 ~ 0.276 in.)
Service Limit: 6.8 mm (0.268 in.)

★If any shift drum groove is worn over the service limit, the drum must be replaced.

Shift Drum Groove Width
Standard: 7.05 ~ 7.20 mm (0.278 ~ 0.283 in.)
Service Limit: 7.3 mm (0.29 in.)

★If the shift drum has been replaced, replace the gear position sensor as a set.

Transmission

Gear Dog and Gear Dog Hole Damage Inspection

● Visually inspect the gear dogs [A] and gear dog holes [B].

★Replace any damaged gears or gears with excessively worn dogs or dog holes.

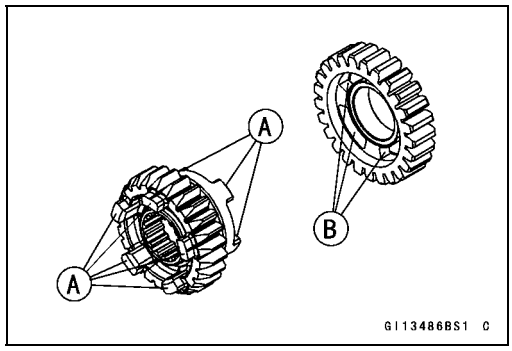

Ball Bearing, Needle Bearing, and Oil Seal

Ball and Needle Bearing Replacement

NOTICE
Do not remove the ball or needle bearings unless it is necessary. Removal may damage them.

● Using a press or puller, remove the ball bearing and/or needle bearings.

NOTE

○*In the absence of the above mentioned tools, satisfactory results may be obtained by heating the case to approximately 93°C (200°F) max., and tapping the bearing in or out.*

NOTICE
Do not heat the case with a torch. This will warp the case. Soak the case in oil and heat the oil.

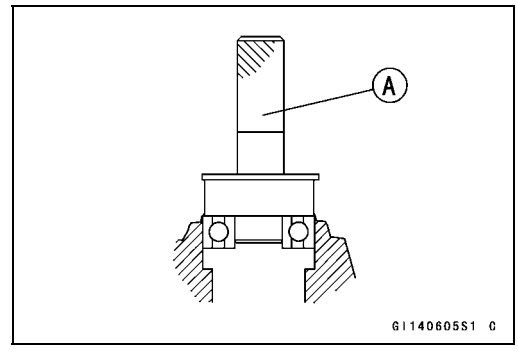

● Using a press and the bearing driver set [A], install the new ball bearing until it stops at the bottom of its housing.

○The new needle bearings must be pressed into the crankcase so that the end is flush with the end of the hole.

Special Tool - Bearing Driver Set: 57001-1129

Ball and Needle Bearing Wear Inspection

NOTICE
Do not remove the bearings for inspection. Removal may damage them.

● Check the ball bearings.

○Since the ball bearings are made to extremely close tolerances, the wear must be judged by feel rather than measurement. Clean each bearing in a high flash-point solvent, dry it (do not spin the bearing while it is dry), and oil it with engine oil.

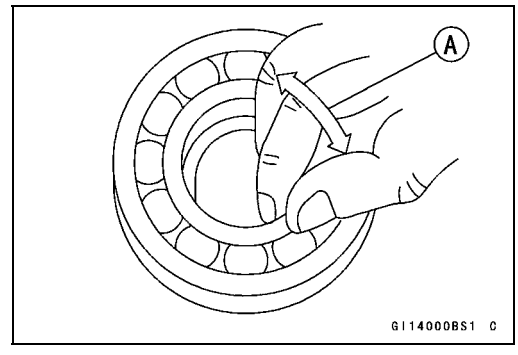

○Spin [A] the bearing by hand to check its condition.

★If the bearing is noisy, does not spin smoothly, or has any rough spots, replace it.

● Check the needle bearings.

○The rollers in a needle bearing normally wear very little, and wear is difficult to measure. Instead of measuring, inspect the bearing for abrasion, color change, or other damage.

★If there is any doubt as to the condition of a needle bearing, replace it.

Oil Seal Inspection

● Inspect the oil seals.

★Replace it if the lips are misshapen, discolored (indicating that the rubber has deteriorated), hardened or otherwise damaged.

Wheels/Tires

Table of Contents

Exploded View 10-2
Specifications 10-4
Special Tools 10-5
Wheels (Rims) 10-6
- Front Wheel Removal 10-6
- Front Wheel Installation 10-6
- Rear Wheel Removal 10-7
- Rear Wheel Installation 10-8
- Wheel Inspection 10-10
- Axle Inspection 10-10
- Balance Inspection 10-11
- Balance Adjustment 10-11
- Balance Weight Removal 10-11
- Balance Weight Installation 10-11

Tires 10-13
- Air Pressure Inspection/Adjustment 10-13
- Tire Inspection 10-13
- Tire Removal 10-13
- Tire Installation 10-13
- Tire Repair 10-15

Hub Bearing 10-16
- Hub Bearing Removal 10-16
- Hub Bearing Installation 10-16
- Hub Bearing Inspection 10-16
- Hub Bearing Lubrication 10-17

Exploded View

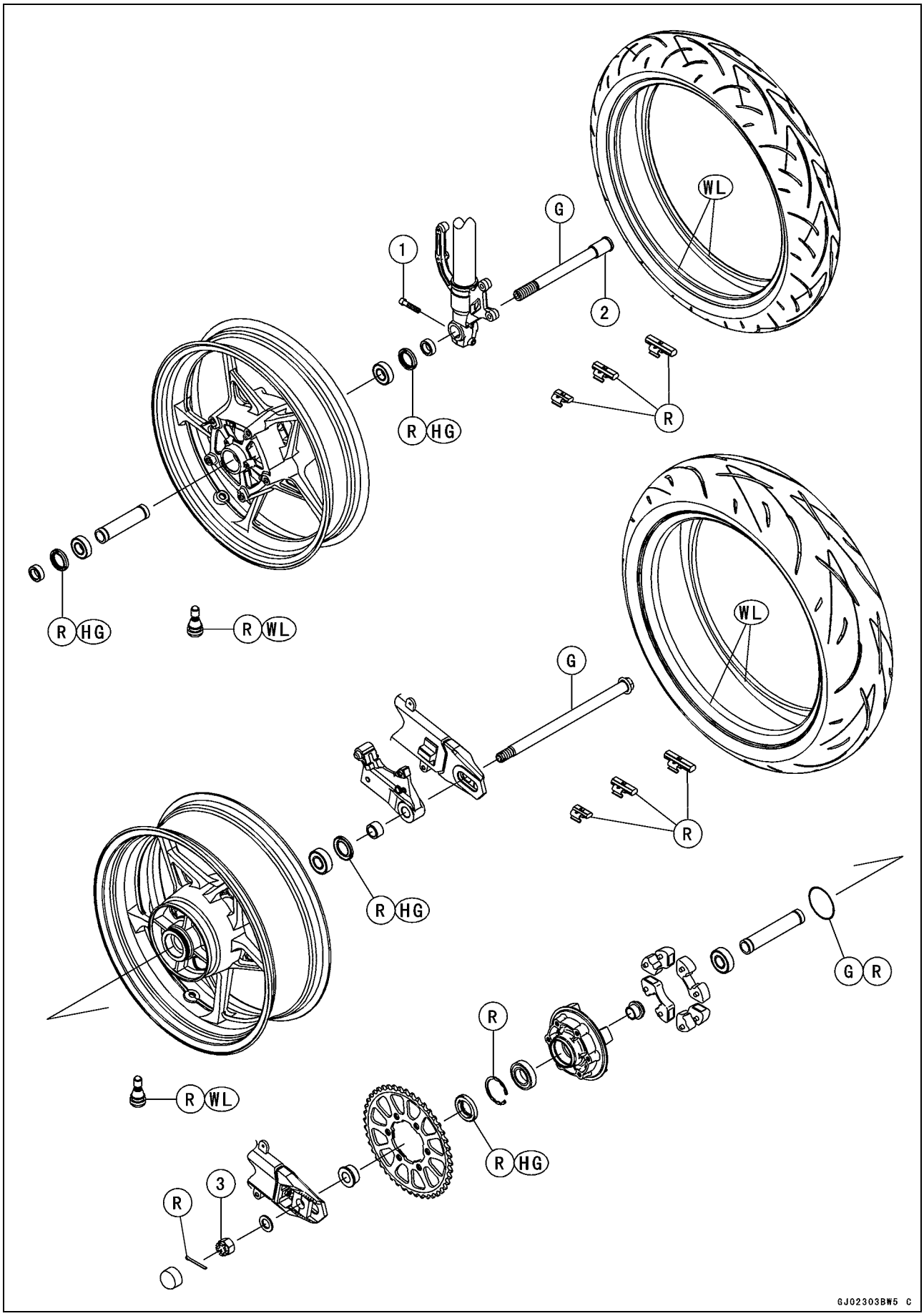

Exploded View

No.	Fastener	Torque			Remarks
		N·m	kgf·m	ft·lb	
1	Front Axle Clamp Bolt	20	2.0	15	
2	Front Axle	108	11.0	79.7	G
3	Rear Axle Nut	108	11.0	79.7	

G: Apply grease.
HG: Apply high-temperature grease.
R: Replacement Parts
WL: Apply soap and water solution or rubber lubricant.

Specifications

Item	Standard	Service Limit
Wheels (Rims)		
Rim Runout:		
Axial	TIR 0.5 mm (0.02 in.) or less	TIR 1.0 mm (0.04 in.)
Radial	TIR 0.8 mm (0.03 in.) or less	TIR 1.0 mm (0.04 in.)
Axle Runout/100 mm (3.94 in.)	TIR 0.03 mm (0.001 in.) or less	TIR 0.2 mm (0.008 in.)
Wheel Balance	10 g (0.35 oz.) or less	– – –
Balance Weights	10 g (0.35 oz.), 20 g (0.71 oz.), 30 g (1.06 oz.)	– – –
Rim Size:		
Front	J17M/C × MT3.50	– – –
Rear	J17M/C × MT5.50	– – –
Tires		
Air Pressure (when cold):		
Front	Up to 180 kg (397 lb) load: 250 kPa (2.50 kgf/cm², 36 psi)	– – –
Rear	Up to 180 kg (397 lb) load: 290 kPa (2.90 kgf/cm², 42 psi)	– – –
Tread Depth:		
Front	4.0 mm (0.16 in.)	1 mm (0.04 in.) (AT, CH, DE) 1.6 mm (0.06 in.)
Rear	5.3 mm (0.21 in.)	Up to 130 km/h (80 mph): 2 mm (0.08 in.) Over 130 km/h (80 mph): 3 mm (0.12 in.)
Standard Tire:		
Front		
Make	DUNLOP	– – –
Type	SPORTMAX D214F Z	– – –
Size	120/70ZR17 M/C (58W)	– – –
Rear		
Make	DUNLOP	– – –
Type	SPORTMAX D214Z	– – –
Size	180/55ZR17 M/C (73W)	– – –

⚠ WARNING

Some replacement tires may adversely affect handling and cause an accident resulting in serious injury or death. To ensure proper handling and stability, use only the recommended standard tires for replacement, inflated to the standard pressure.

Special Tools

Bearing Driver Set:
57001-1129

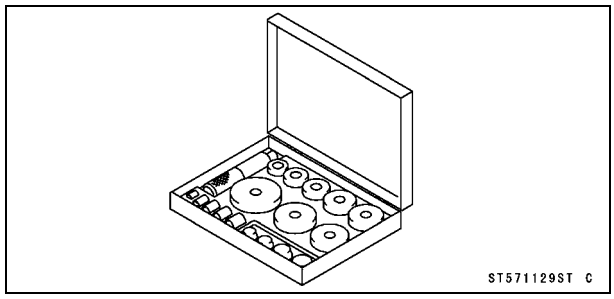

Bearing Remover Shaft, ϕ13:
57001-1377

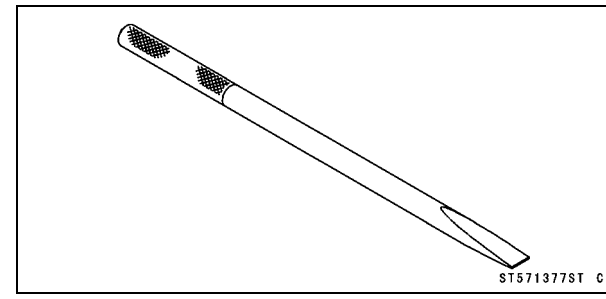

Bearing Remover Head, ϕ20 × ϕ22:
57001-1293

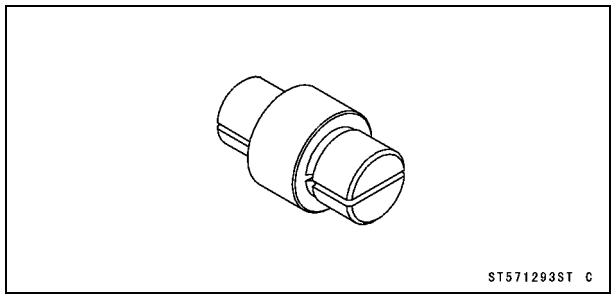

Wheels (Rims)

Front Wheel Removal

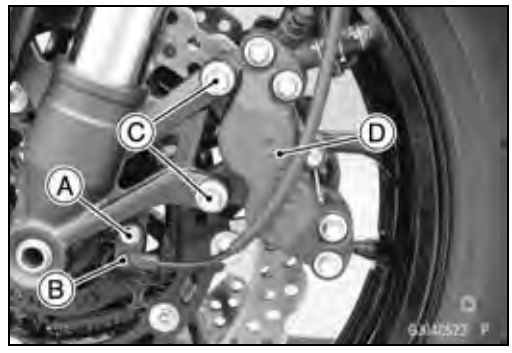

- For ABS equipped models, remove the front wheel rotation sensor bolt [A] and front wheel rotation sensor [B].
- Remove:
  Front Caliper Mounting Bolts [C] (Both Sides)
  Front Caliper [D] (Both Sides)

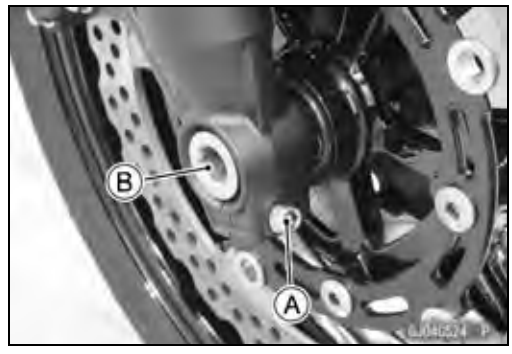

- Loosen:
  Front Axle Clamp Bolt [A]
  Front Axle [B]
- Raise the front wheel off the ground with a suitable stand.
- Pull out the front axle to the right side and drop the front wheel out of the front forks.

NOTICE
Do not lay the wheel down on one of the discs. This can damage or warp the disc. Place blocks under the wheel so that the disc does not touch the ground.

Front Wheel Installation

NOTE

○*The direction of the wheel rotation [A] is shown by an arrow [B] on the wheel hub.*

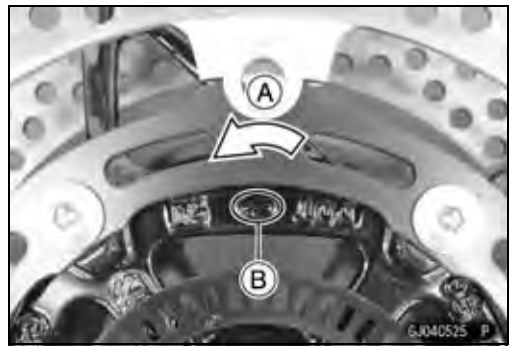

- Check the wheel rotation mark on the front wheel and install it.

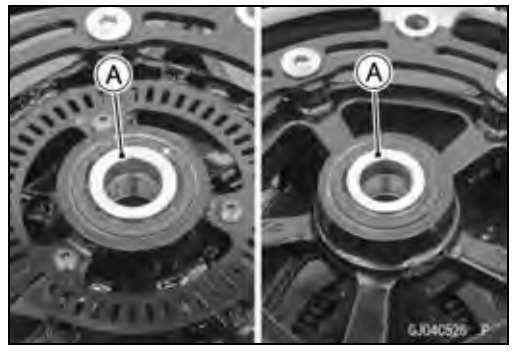

- Apply high-temperature grease to the grease seal lips.
- Fit the collar [A] on the both sides of the hub.

○The collars are identical.

Wheels (Rims)

● Apply a thin coat of grease [A] to the front axle [B].
About 10 mm (0.4 in.) [C]
About 30 mm (1.2 in.) [D]

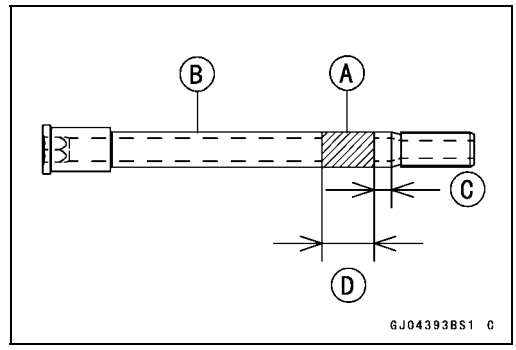

NOTE

○*Do not apply grease to the threads of the axle.*

● Insert the front axle from the right side.
● Tighten:

Torque - Front Axle: 108 N·m (11.0 kgf·m, 79.7 ft·lb)

● Before tightening the front axle clamp bolt [A] on the right front fork leg, pump the front fork up and down 4 or 5 times to allow the right front fork leg to seat on the front axle.

NOTE

○*Put a block in front of the front wheel to stop moving.*

● Tighten:

Torque - Front Axle Clamp Bolt: 20 N·m (2.0 kgf·m, 15 ft·lb)

● Install the removed parts (see appropriate chapters).
● Check the front brake effectiveness (see Brake Operation Inspection in the Periodic Maintenance chapter).

⚠ WARNING

After servicing, it takes several applications of the brake lever before the brake pads contact the disc, which could result in increased stopping distance and cause an accident resulting in injury or death. Do not attempt to ride the motorcycle until a firm brake lever is obtained by pumping the lever until the pads are against the disc.

Rear Wheel Removal

● Raise the rear wheel off the ground with the stand [A].

● Remove the rear wheel rotation sensor bolt [A] and rear wheel rotation sensor [B], and clear the rear wheel rotation sensor lead from the clamp [C].
● Remove the rear caliper [D] with the brake hose connected (see Rear Caliper Removal in the Brakes chapter).

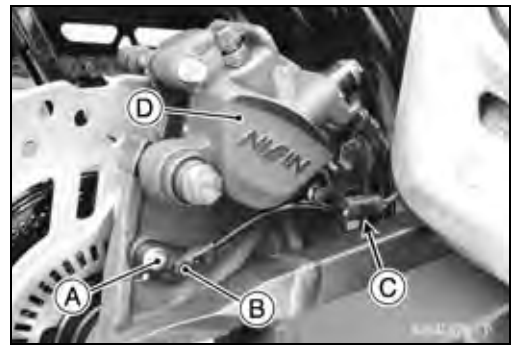

Wheels (Rims)

● Remove:
Cap [A]

● Remove:
Cotter Pin [A]
Rear Axle Nut [B]
Washer [C]
Rear Axle [D] (from Right Side)

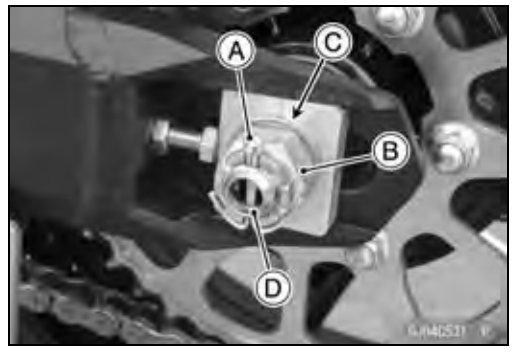

● Remove the drive chain [A] from the rear sprocket toward the left.
● Move the rear wheel back and remove it.

NOTICE
Do not lay the wheel on the ground with the disc facing down. This can damage or warp the disc. Place blocks under the wheel so that the disc does not touch the ground.

Rear Wheel Installation

● Apply high-temperature grease to the grease seal lips.
● Fit the collar on the both sides of the hub.
Left Side Collar [A] (with Flange)
Right Side Collar [B]

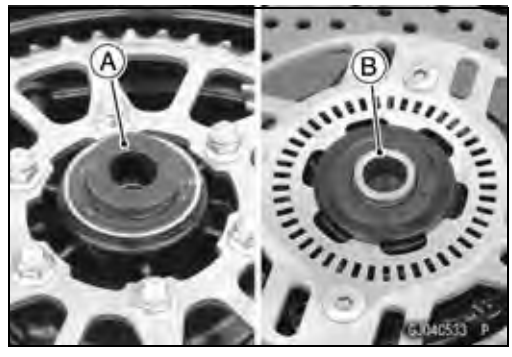

● Install the caliper bracket [A] onto the stopper [B] of the swingarm.
● Engage the drive chain with the rear sprocket.

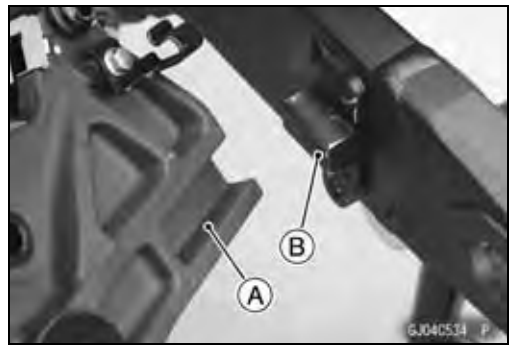

Wheels (Rims)

● Apply a thin coat of grease [A] to the rear axle [B].
About 10 mm (0.4 in.) [C]
About 70 mm (2.8 in.) [D]

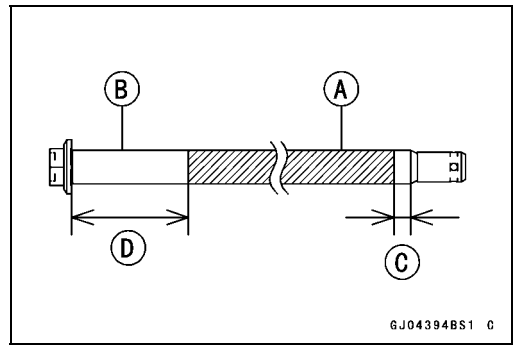

NOTE

○*Do not apply grease to the threads of the axle.*

● Insert the rear axle from the right side of the wheel.
● Install the washer and rear axle nut.
● Adjust the drive chain slack before tightening the rear axle nut (see Drive Chain Slack Inspection in the Periodic Maintenance chapter).
● Tighten:

Torque - Rear Axle Nut: 108 N·m (11.0 kgf·m, 79.7 ft·lb)

● Insert a new cotter pin [A].

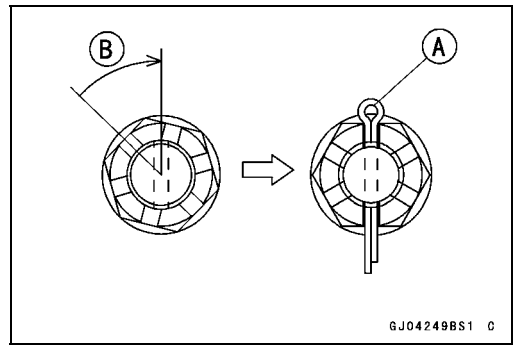

NOTE

○*When inserting the cotter pin, if the slots in the nut do not align with the cotter pin hole in the axle, tighten the nut clockwise [B] up to next alignment.*
○*It should be within 30 degrees.*
○*Loosen once and tighten again when the slot goes past the nearest hole.*

● Bend the cotter pin [A] along the nut [B].

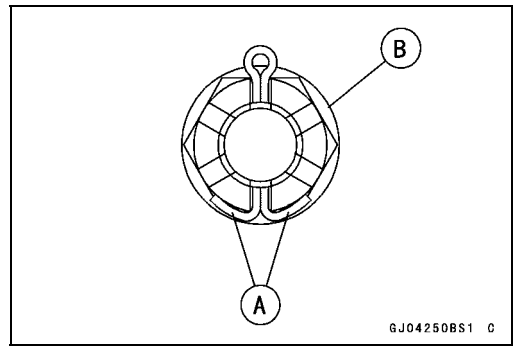

⚠ WARNING

A loose axle nut can lead to an accident resulting in serious injury or death. Tighten the axle nut to the proper torque and install a new cotter pin.

● Install the removed parts (see appropriate chapters).
● Check the rear brake effectiveness (see Brake Operation in the Periodic Maintenance chapter).

⚠ WARNING

After servicing, it takes several applications of the brake pedal before the brake pads contact the disc, which could result in increased stopping distance and cause an accident resulting in injury or death. Do not attempt to ride the motorcycle until a firm brake pedal is obtained by pumping the pedal until the pads are against the disc.

Wheels (Rims)

Wheel Inspection

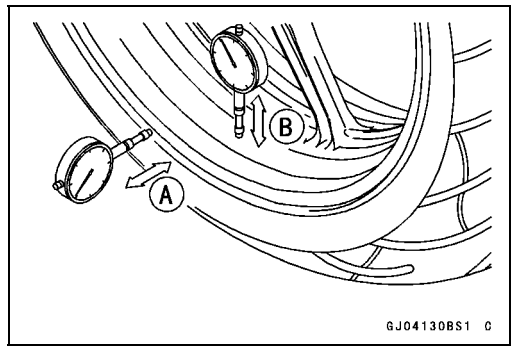

- Raise the front/rear wheel off the ground (see Front/Rear Wheel Removal).
- Spin the wheel lightly, and check for roughness or binding.

★If roughness or binding is found, replace the hub bearings (see Hub Bearing Removal/Installation).

- Inspect the wheel for small cracks, dents, bending, or warp.

★If there is any damage to the wheel, replace the wheel.

- Remove the wheel, and support it with the tire by the axle.
- Measure the rim runout, axial [A] and radial [B], with a dial gauge.

★If the rim runout exceeds the service limit, check the hub bearings (see Hub Bearing Inspection).

★If the problem is not due to the bearings, replace the wheel.

Rim Runout (with tire installed)

Standard:

Axial	**TIR 0.5 mm (0.02 in.) or less**
Radial	**TIR 0.8 mm (0.03 in.) or less**

Service Limit:

Axial	**TIR 1.0 mm (0.04 in.)**
Radial	**TIR 1.0 mm (0.04 in.)**

⚠ WARNING

Damaged wheel parts may fail and cause an accident resulting in serious injury or death. Never attempt to repair a damaged wheel part. If the wheel part is damaged, it must be replaced with a new one.

Axle Inspection

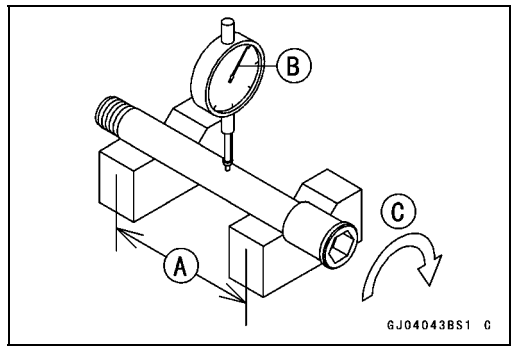

- Remove the front and rear axles (see Front/Rear Wheel Removal).
- Visually inspect the front and rear axle for damages.

★If the axle is damaged or bent, replace it.

- Place the axle in V blocks that are 100 mm (3.94 in.) [A] apart, and set a dial gauge [B] on the axle at a point halfway between the blocks. Turn [C] the axle to measure the runout. The difference between the highest and lowest dial readings is the amount of runout.

★If axle runout exceeds the service limit, replace the axle.

Axle Runout/100 mm (3.94 in.)

Standard:	**TIR 0.03 mm (0.001 in.) or less**
Service Limit:	**TIR 0.2 mm (0.008 in.)**

Wheels (Rims)

Balance Inspection

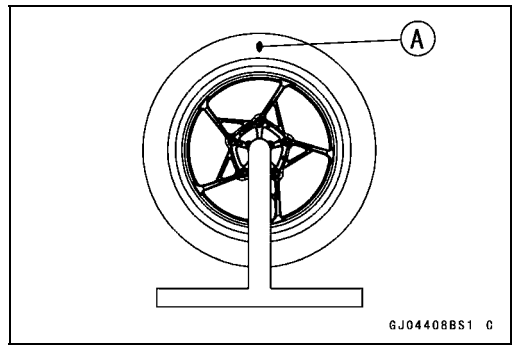

- Remove the front and rear wheels (see Front/Rear Wheel Removal).
- Support the wheel so that it can be spun freely.
- Spin the wheel lightly, and mark [A] the wheel at the top when the wheel stops.

○Repeat this procedure several times. If the wheel stops of its own accord in various positions, it is well balanced.

★If the wheel always stops in one position, adjust the wheel balance (see Balance Adjustment).

Balance Adjustment

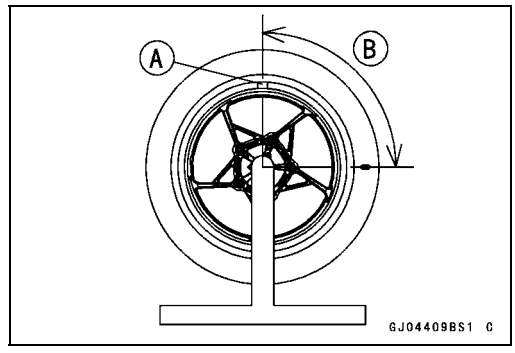

- If the wheel always stops in one position, provisionally attach a balance weight [A] on the rim at the marking using adhesive tape.
- Rotate the wheel 1/4 turn [B], and see whether or not the wheel stops in this position. If it does, the correct balance weight is being used.

★If the wheel rotates and the weight goes up, replace the weight with the next heavier size. If the wheel rotates and the weight goes down, replace the weight with the next lighter size. Repeat these steps until the wheel remains at rest after being rotated 1/4 turn.

- Rotate the wheel another 1/4 turn and then another 1/4 turn to see if the wheel is correctly balanced.
- Repeat the entire procedure as many times as necessary to achieve correct wheel balance.
- Permanently install the balance weight.

Balance Weight Removal

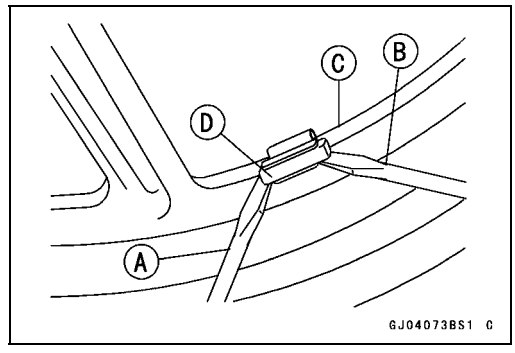

- Insert a flat tip screwdrivers [A] [B] between the rib [C] and weight [D] as shown.
- Pry the balance weight with two flat tip screwdrivers and remove the balance weight.
- Discard the used balance weight.

NOTICE
Do not tap the screwdrivers. The rim could be damaged.

Balance Weight Installation

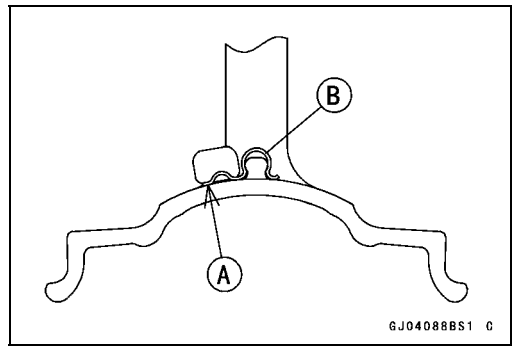

- Check if the weight portion has any play on the blade [A] and clip [B].

★If it does, discard it.

⚠ WARNING
Unbalanced wheels can create an unsafe riding condition. If the balance weight has any play on the rib of the rim, the blade and/or clip have been stretched. Replace the loose balance weight. Do not reuse used balance weight.

Wheels (Rims)

Balance Weight

Part Number	Weight
41075-0007	10 g (0.35 oz.)
41075-0008	20 g (0.71 oz.)
41075-0009	30 g (1.06 oz.)

NOTE

○*Balance weights are available from Kawasaki dealers in 10, 20 and 30 grams (0.35, 0.71 and 1.06 oz.) sizes. An imbalance of less than 10 grams (0.35 oz.) will not usually affect running stability.*

○*Do not use four or more balance weights (more than 90 grams, 3.2 oz.). If the wheel requires an excess balance weight, disassemble the wheel to find the cause.*

● Slip the balance weight [A] onto the rib [B] by pushing or lightly hammering [C] the clip [D].
Left Side [E]
Right Side [F]

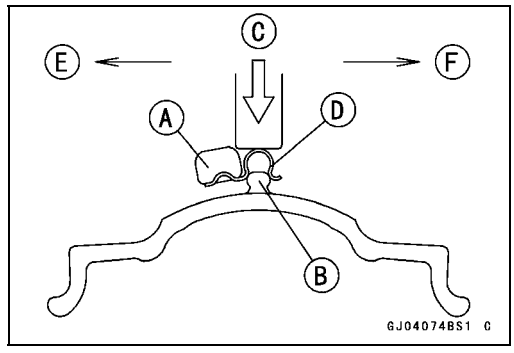

● Be sure to install the balance weight.

○Check that the blade [A] and clip [B] are fully seated on the rim [C] and that the clip is hooked over the rib [D].
Left Side [E]
Right Side [F]

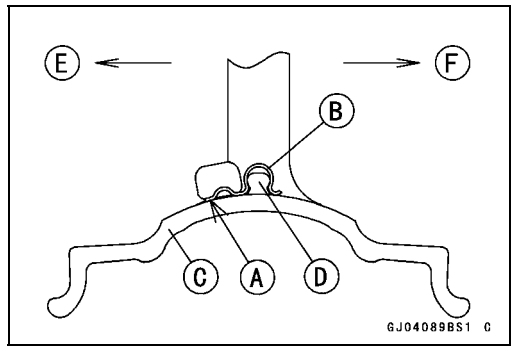

Tires

Air Pressure Inspection/Adjustment

- Refer to the Air Pressure Inspection in the Periodic Maintenance chapter.

Tire Inspection

- Refer to the Wheel/Tire Damage Inspection in the Periodic Maintenance chapter.

Tire Removal

- Remove:
  Wheels (see Front/Rear Wheel Removal)
  Valve Core (Let out the air)
- To maintain wheel balance, mark the valve stem position on the tire with chalk so that the tire can be reinstalled in the same position.
  Chalk Mark or Yellow Mark [A]
  Air Valve [B]
  Align [C]

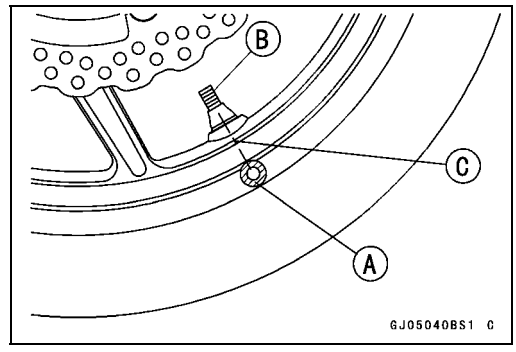

- Lubricate the tire beads and rim flanges on both sides with a soap and water solution or rubber lubricant. This helps the tire beads slip off the rim flanges.

NOTICE
Never lubricate with engine oil or petroleum distillates because they will deteriorate the tire.

- Remove the tire from the rim using a suitable commercially available tire changer.

NOTE

○*The tires cannot be removed with hand tools because they fit the rims too tightly.*

Tire Installation

⚠ WARNING
Some replacement tires may adversely affect handling and cause an accident resulting in serious injury or death. To ensure proper handling and stability, use only the recommended standard tires for replacement, inflated to the standard pressure.

- Inspect the rim and tire, and replace them if necessary.
- Clean the sealing surfaces of the rim and tire, and smooth the sealing surfaces of the rim with a fine emery cloth if necessary.
- Remove the air valve and discard it.

NOTICE
Replace the air valve whenever the tire is replaced. Do not reuse the air valve.

Tires

● Install a new valve in the rim.

○Remove the valve cap, lubricate the stem seal [A] with a soap and water solution or rubber lubricant, and pull [B] the valve stem through the rim from the inside out until it snaps into place.

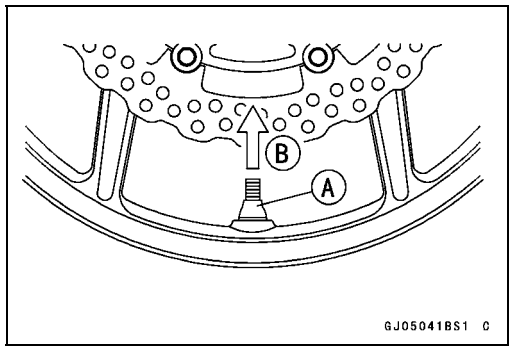

NOTICE

Do not use engine oil or petroleum distillates to lubricate the stem because they will deteriorate the rubber.

○The air valve is as shown.

Valve Cap [A]
Valve Core [B]
Stem Seal [C]
Valve Stem [D]
Valve Seat [E]
Valve Opened [F]

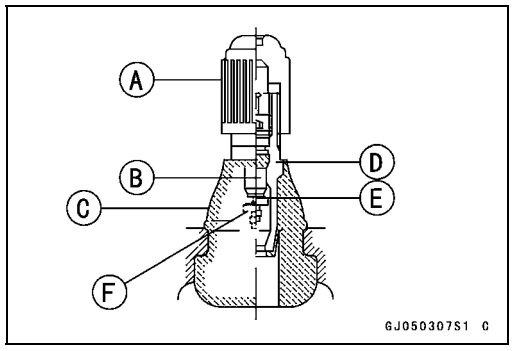

● Check the tire rotation mark on the front and rear tires and install them on the rim accordingly.

Tire Rotation Mark [A]
Rotating Direction [B]

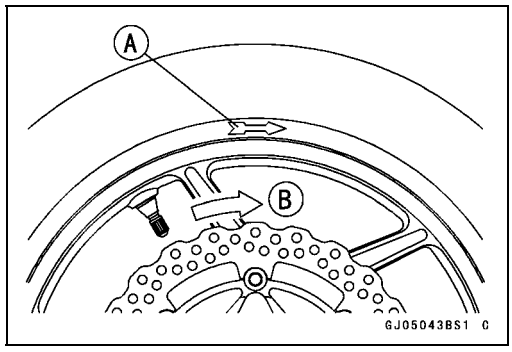

● Position the tire on the rim so that the air valve [A] align with the tire balance mark [B] (the chalk mark made during removal, or the yellow paint mark on a new tire).

● Install the tire bead over the rim flange using a suitable commercially available tire changer.

● Lubricate the tire beads and rim flanges with a soap and water solution or rubber lubricant to help seat the tire beads in the sealing surfaces of the rim while inflating the tire.

● Center the rim in the tire beads, and inflate the tire with compressed air until the tire beads seat in the sealing surfaces.

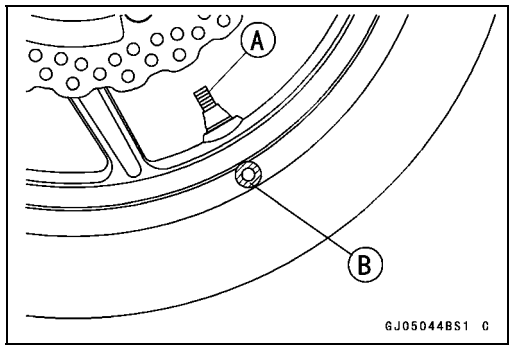

⚠ WARNING

Overinflating a tire can cause it to explode, causing serious injury or death. Be sure to install the valve core whenever inflating the tire, and do not inflate the tire to more than 400 kPa (4.0 kgf/cm², 57 psi).

Tires

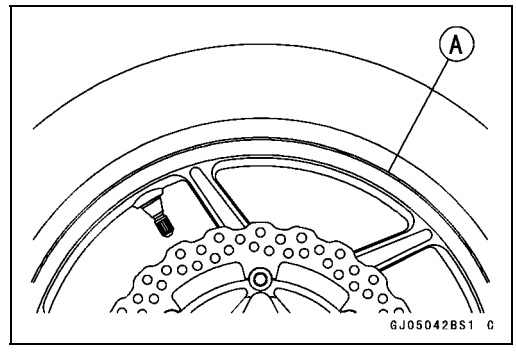

- Check to see that the rim lines [A] on both sides of the tire sidewalls are parallel with the rim flanges.

★If the rim flanges and tire sidewall rim lines are not parallel, remove the valve core.

- Lubricate the rim flanges and tire beads.
- Install the valve core and inflate the tire again.
- After the tire beads seat in the rim flanges, check for air leakage.

○Inflate the tire slightly above standard inflation.

○Use a soap and water solution or submerge the tire, and check for bubbles that would indicate leakage.

- Adjust the air pressure to the specified pressure (see Air Pressure Inspection in the Periodic Maintenance chapter).
- Install the air valve cap.
- Adjust the wheel balance (see Balance Adjustment).

Tire Repair

Currently two types of repair for tubeless tires have come into wide use. One type is called a temporary (external) repair which can be carried out without removing the tire from the rim, and the other type is called permanent (internal) repair which requires tire removal. It is generally understood that higher running durability is obtained by permanent (internal) repairs than by temporary (external) ones. Also, permanent (internal) repairs have the advantage of permitting a thorough examination for secondary damage not visible from external inspection of the tire. For these reasons, Kawasaki does not recommend temporary (external) repair. Only appropriate permanent (internal) repairs are recommended. Repair methods may vary slightly from make to make. Follow the repair methods indicated by the manufacturer of the repair tools and materials so that safe results can be obtained.

Hub Bearing

Hub Bearing Removal

● Remove the wheels (see Front/Rear Wheel Removal), and take out the following.
Collars
Coupling (Out of rear hub)
Grease Seals

● Use the bearing remover to remove the hub bearings [A].

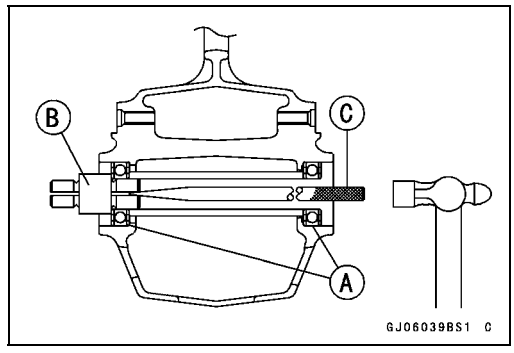

NOTICE
Do not lay the wheel on the ground with the disc facing down. This can damage or warp the disc. Place blocks under the wheel so that the disc does not touch the ground.

Special Tools - Bearing Remover Head, ϕ20 × ϕ22 [B]: 57001-1293
Bearing Remover Shaft, ϕ13 [C]: 57001 -1377

Hub Bearing Installation

● Before installing the hub bearings, blow any dirt or foreign particles out of the hub with compressed air to prevent contamination of the bearings.
● Replace the bearings with new ones.
● Install the bearings by using the bearing driver set which does not contact the bearing inner race.

NOTE

○*Install the bearings so that the marked side faces out.*

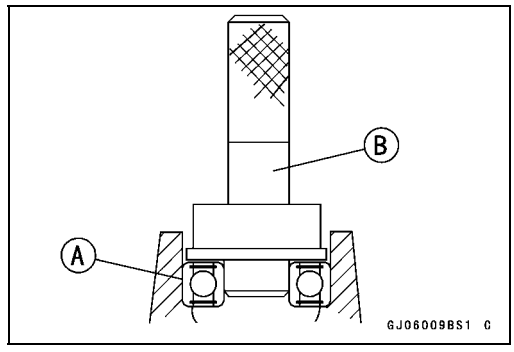

● Press in each right bearing [A] until they are bottomed.

Special Tool - Bearing Driver Set [B]: 57001-1129

● Replace the grease seals with new ones.
● Press in the grease seals [A] so that the seal surface is flush [B] with the end of the hole.
○Apply high-temperature grease to the grease seal lips.

Special Tool - Bearing Driver Set [C]: 57001-1129

● Install the removed parts (see appropriate chapters).

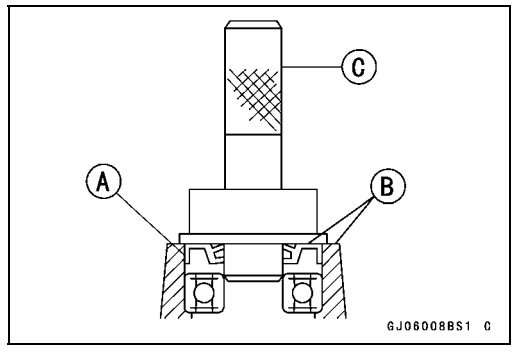

Hub Bearing Inspection

Since the hub bearings are made to extremely close tolerances, the clearance can not normally be measured.

NOTE

○*Do not remove any bearings for inspection. If any bearings are removed, they will need to be replaced with new ones.*

● Turn each bearing in the hub back and forth [A] while checking for plays, roughness, or binding.
★If bearing play, roughness or binding is found, replace the bearing.
● Examine the bearing seal [B] for tears or leakage.
★If the seal is torn or is leaking, replace the bearing.

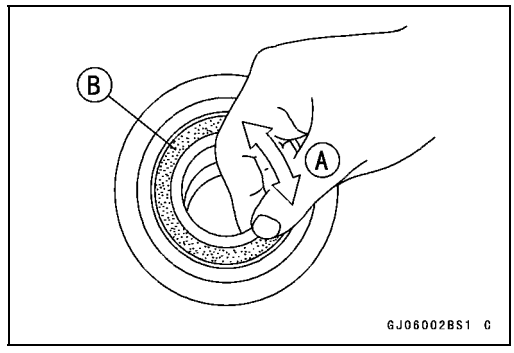

Hub Bearing

Hub Bearing Lubrication

NOTE

○*Since the hub bearings are packed with grease and sealed, lubrication is not required.*

Final Drive

Table of Contents

Exploded View 11-2
Specifications 11-4
Special Tools 11-5
Drive Chain 11-6
- Drive Chain Slack Inspection 11-6
- Drive Chain Slack Adjustment 11-6
- Wheel Alignment Inspection/Adjustment 11-6
- Drive Chain Wear Inspection 11-6
- Drive Chain Lubrication 11-6
- Drive Chain Replacement 11-6

Sprocket, Coupling 11-10
- Engine Sprocket Removal 11-10
- Engine Sprocket Installation 11-10
- Engine Sprocket Cover Disassembly 11-11
- Engine Sprocket Cover Assembly 11-11
- Rear Sprocket Removal 11-11
- Rear Sprocket Installation 11-12
- Coupling Installation 11-12
- Coupling Bearing Removal 11-12
- Coupling Bearing Installation 11-13
- Coupling Bearing Inspection 11-13
- Coupling Bearing Lubrication 11-13
- Coupling Damper Inspection 11-14
- Sprocket Wear Inspection 11-14
- Rear Sprocket Warp Inspection 11-14

Exploded View

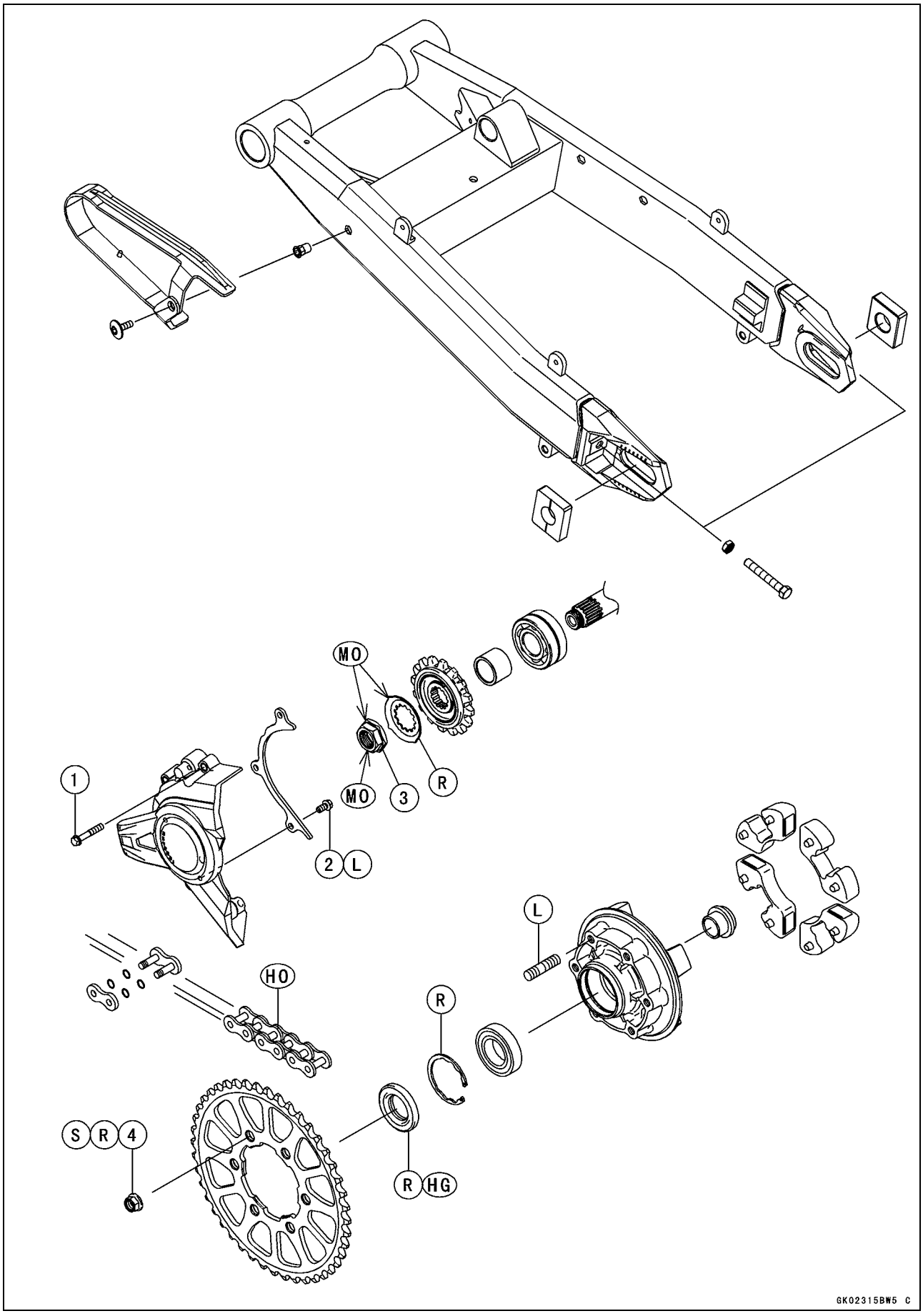

Exploded View

No.	Fastener	Torque			Remarks
		N·m	kgf·m	ft·lb	
1	Engine Sprocket Cover Bolts	9.8	1.0	87 in·lb	
2	Chain Guide Bolts	9.8	1.0	87 in·lb	L
3	Engine Sprocket Nut	147	15.0	108	MO
4	Rear Sprocket Nuts	59	6.0	44	R, S

HG: Apply high-temperature grease.
HO: Apply heavy oil.
L: Apply a non-permanent locking agent.
MO: Apply molybdenum disulfide oil solution.
(mixture of the engine oil and molybdenum disulfide grease in a weight ratio 10:1)
R: Replacement Parts
S: Follow the specified tightening sequence.

Specifications

Item	Standard	Service Limit
Drive Chain		
Drive Chain Slack	25 ~ 35 mm (1.0 ~ 1.4 in.)	– – –
Drive Chain Wear (20-link Length)	317.5 ~ 318.2 mm (12.50 ~ 12.53 in.)	319 mm (12.6 in.)
Standard Chain:		
Make	ENUMA	– – –
Type	EK525RMX3/3D	– – –
Link	114 links	– – –
Link Pin Outside Diameter (When drive chain replacing)	5.6 ~ 6.0 mm (0.22 ~ 0.24 in.)	– – –
Link Plates Outside Width (When drive chain replacing)	19.15 ~ 19.30 mm (0.7539 ~ 0.7598 in.)	– – –
Sprockets		
Rear Sprocket Warp	TIR 0.4 mm (0.016 in.) or less	TIR 0.5 mm (0.020 in.)

Special Tools

Inside Circlip Pliers:
57001-143

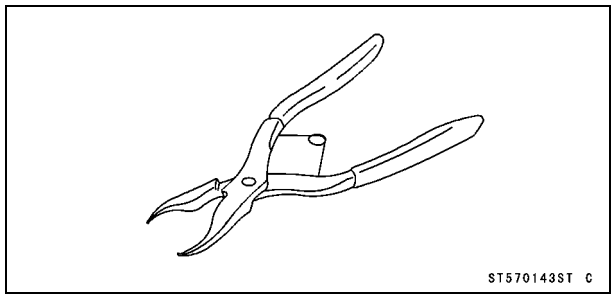

Bearing Driver Set:
57001-1129

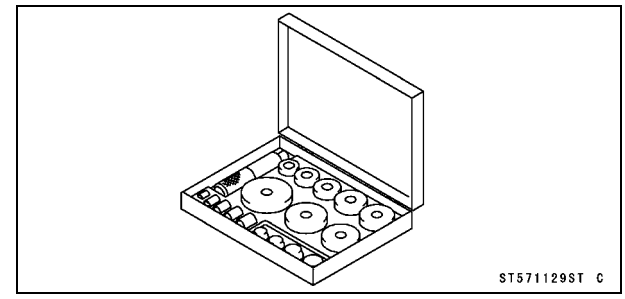

Drive Chain

Drive Chain Slack Inspection

● Refer to the Drive Chain Slack Inspection in the Periodic Maintenance chapter.

Drive Chain Slack Adjustment

● Refer to the Drive Chain Slack Adjustment in the Periodic Maintenance chapter.

Wheel Alignment Inspection/Adjustment

● Refer to the Wheel Alignment Inspection in the Periodic Maintenance chapter.

Drive Chain Wear Inspection

● Refer to the Drive Chain Wear Inspection in the Periodic Maintenance chapter.

Drive Chain Lubrication

● Refer to the Drive Chain Lubrication Condition Inspection in the Periodic Maintenance chapter.

Drive Chain Replacement

● Remove:

Mud Guard (see Mud Guard Removal in the Frame chapter)

Engine Sprocket Cover (see Engine Sprocket Removal)

NOTICE
For safety, if the drive chain shall be replaced, replace it using a recommended tool.

Recommended Tool - Type: EK Joint Tool #50
Brand: ENUMA

Body [A]
Handlebar [B]
Cutting and Riveting Pin [C]
For Cutting [D]
For Riveting [E]
Plate Holder (A) [F]
Plate Holder (B) [G]
Gauge [H]

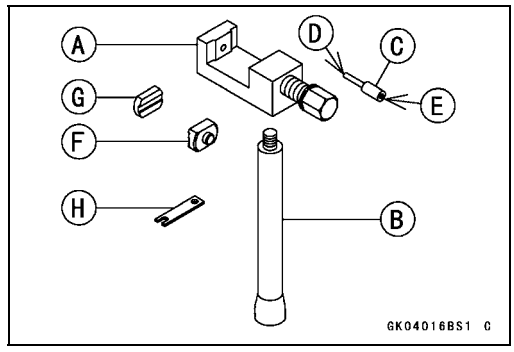

● Grind [A] the pin head to make it flat.
● Set the cutting and riveting pin [B] as shown.

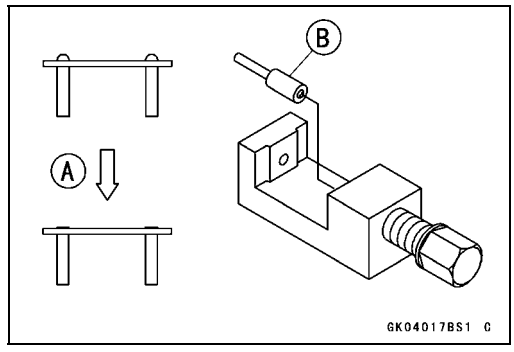

Drive Chain

- Screw the pin holder until it touches the link pin.
- Be sure that the cutting pin hits center of the link pin.

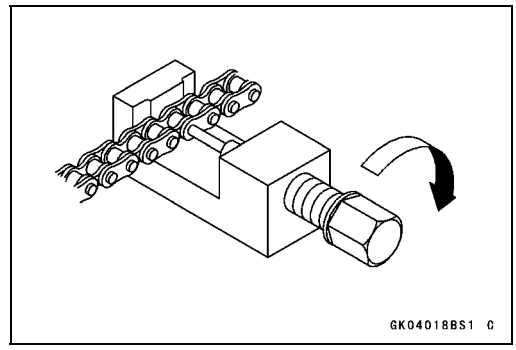

- Screw the handlebar [A] into the body.
- Turn the pin holder with the wrench [B] clockwise to extract the link pin.

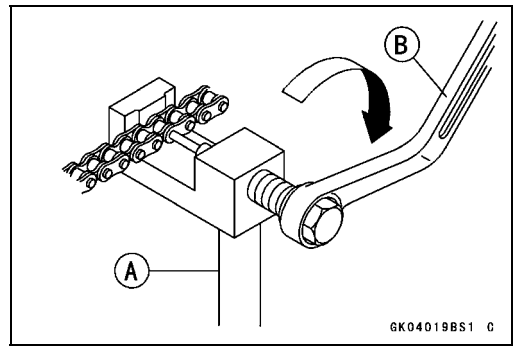

- Replace the link pin, link plate and grease seals.
- Apply grease to the link pins [A] and grease seals [B] [C].
- Engage the drive chain on the engine and rear sprockets.
- Insert the link pins in the drive chain ends.
- Install the grease seals.
- Install the link plate so that the mark [D] faces out.
- Push the link plate by hand or plier to fix it.
- Be sure to set the grease seals correctly.

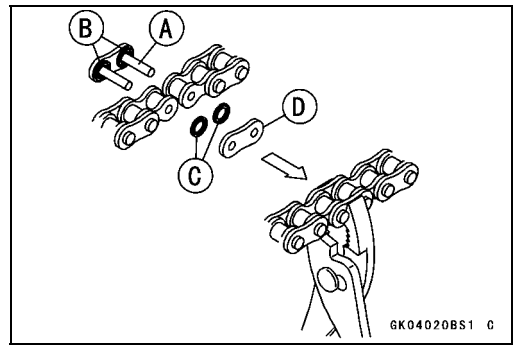

- Set the plate holder (A) [A] and plate holder (B) [B] on the body.

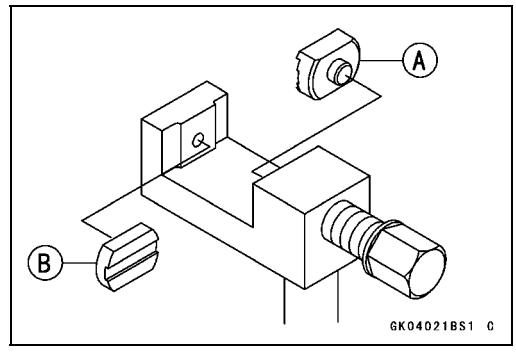

- Fit the plate holder (A) to link plate.
- Turn the pin holder by hand until the plate holder (B) touches the other link plate.

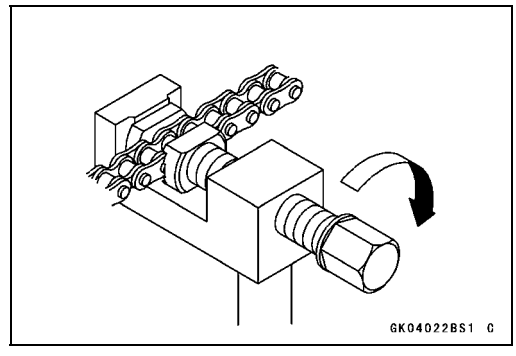

Drive Chain

- Turn the pin holder by a wrench clockwise until two pins of link come into groove of the plate holder (A).
- Take off the plate holder.

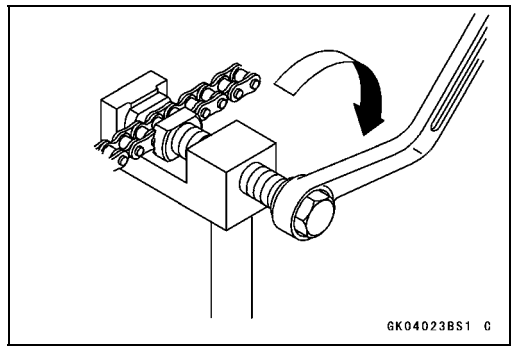

- Set the plate holder (B) [A] and cutting and riveting pin [B] as shown.

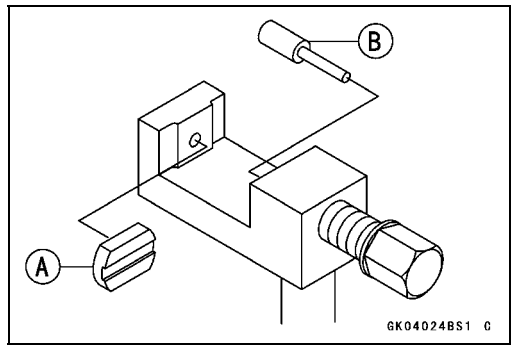

- Turn the pin holder until the riveting pin touches link pin.

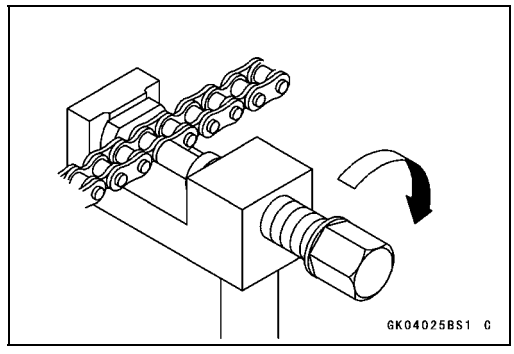

- Turn the wrench clockwise until the tip of riveting pin hits of the link pin.
- Rivet it.
- Same work for the other link pin.

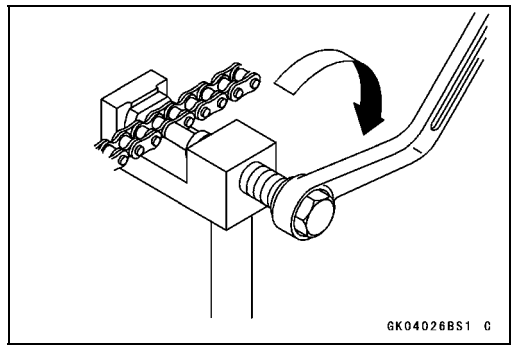

Drive Chain

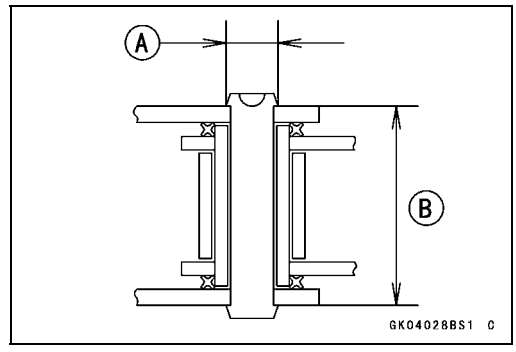

- After staking, check the staked area of the link pin for cracks.
- Measure the outside diameter [A] of the link pin and link plates width [B].

Link Pin Outside Diameter
Standard: 5.6 ~ 6.0 mm (0.22 ~ 0.24 in.)

Link Plates Outside Width
Standard: 19.15 ~ 19.30 mm (0.7539 ~ 0.7598 in.)

★If the reading exceeds the specified length, cut and rejoin the chain again.

- Check:
  Movement of the Rollers
- Adjust the drive chain slack after installing the chain (see Drive Chain Slack Adjustment in the Periodic Maintenance chapter).
- Install the removed parts (see appropriate chapters).

Sprocket, Coupling

Engine Sprocket Removal

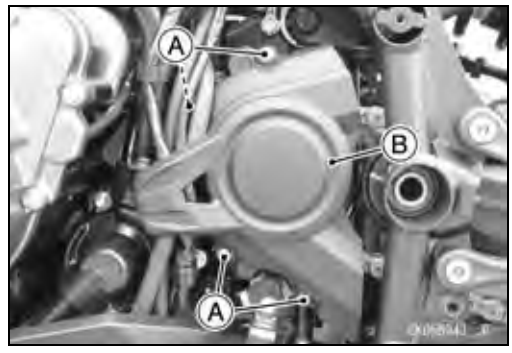

- Remove:
  Left Frame Cover (see Frame Cover Removal in the Frame chapter)
  Engine Sprocket Cover Bolts [A]
  Engine Sprocket Cover [B]

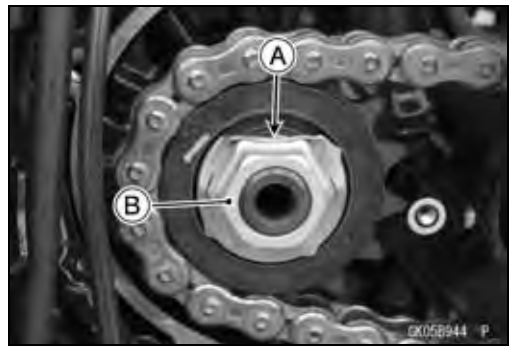

- Flatten out the bended washer [A].
- Remove the engine sprocket nut [B] and washer.

NOTE

○*When loosening the engine sprocket nut, hold the rear brake on.*

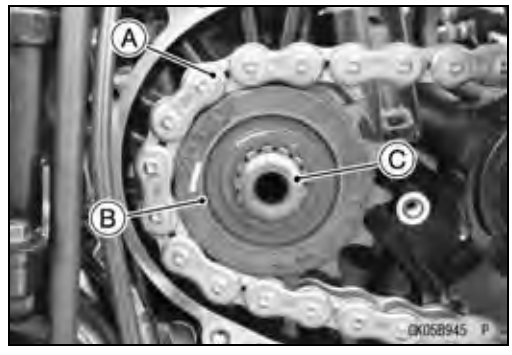

- Raise the rear wheel off the ground with the stand.
- Loosen the drive chain (see Drive Chain Slack Adjustment in the Periodic Maintenance chapter).
- Remove the drive chain from the rear sprocket toward the right.
- Disengage the drive chain [A] from the engine sprocket [B].
- Pull the engine sprocket off the output shaft [C].

Engine Sprocket Installation

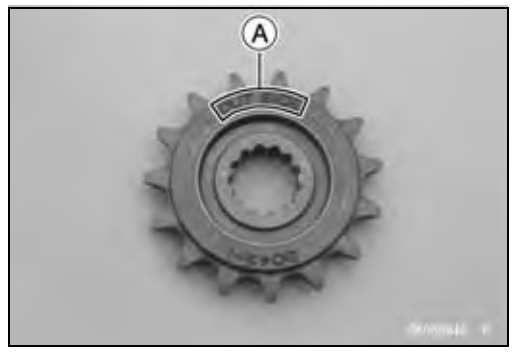

- Replace the sprocket washer and axle cotter pin with new ones.
- Install the engine sprocket so that “OUT SIDE” letters [A] face outward.
- Apply molybdenum disulfide oil solution to the threads and seating surface of the engine sprocket nut.
- Tighten:

Torque - Engine Sprocket Nut: 147 N·m (15.0 kgf·m, 108 ft·lb)

NOTE

○*Tighten the engine sprocket nut while applying the rear brake.*

- After torquing the engine sprocket nut, bend the one side of the washer over the nut.
- Adjust the drive chain slack after installing the engine sprocket (see Drive Chain Slack Adjustment in the Periodic Maintenance chapter).

Sprocket, Coupling

- Install the engine sprocket cover [A].
- Tighten:

Torque - Engine Sprocket Cover Bolts [B]: 9.8 N·m (1.0 kgf·m, 87 in·lb)

- Install the left frame cover (see Frame Cover Installation in the Frame chapter).

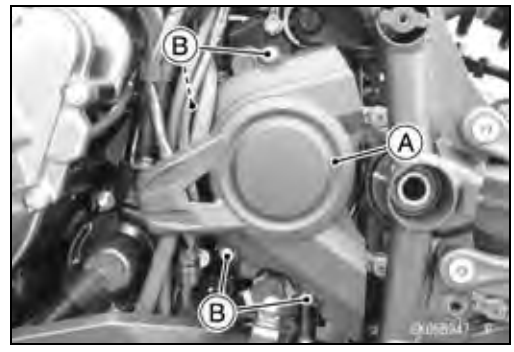

Engine Sprocket Cover Disassembly

- Remove:
  Engine Sprocket Cover (see Engine Sprocket Removal)
  Chain Guide Bolts [A]
  Chain Guide [B]

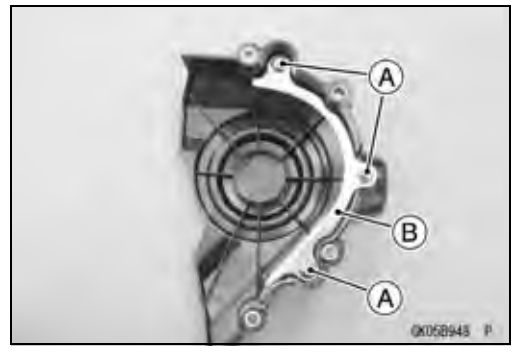

Engine Sprocket Cover Assembly

- Install the chain guide [A].
- Apply a non-permanent locking agent to the threads of the chain guide bolts [B], and tighten them.

Torque - Chain Guide Bolts: 9.8 N·m (1.0 kgf·m, 87 in·lb)

- Install:
  Engine Sprocket Cover (see Engine Sprocket Installation)

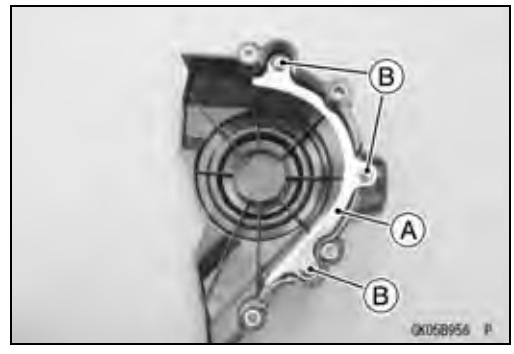

Rear Sprocket Removal

- Remove the rear wheel (see Rear Wheel Removal in the Wheels/Tires chapter).

NOTICE
Do not lay the wheel on the ground with the disc facing down. This can damage or warp the disc. Place blocks under the wheel so that the disc does not touch the ground.

- Remove:
  Rear Sprocket Nuts [A]
  Rear Sprocket [B]

Sprocket, Coupling

Rear Sprocket Installation

- Install the sprocket facing the tooth number marking [A] outward.

- Replace the rear sprocket nuts with new ones.
- Tighten the rear sprocket nuts following the specified tightening sequence [1 ~ 8].

Torque - Rear Sprocket Nuts: 59 N·m (6.0 kgf·m, 44 ft·lb)

- Install the rear wheel (see Rear Wheel Installation in the Wheels/Tires chapter).

Coupling Installation

- Apply high-temperature grease to the following.
  Coupling Grease Seal Lips [A]
  Coupling Internal Surface [B]

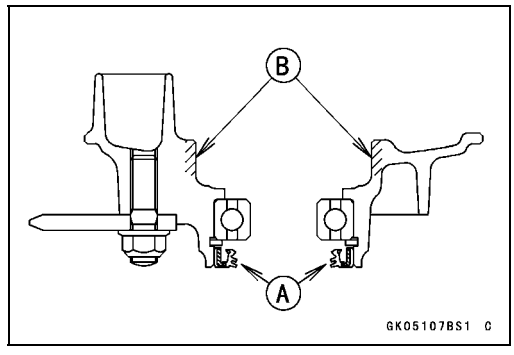

- Replace the O-ring [A] with a new one.
- Apply high-temperature grease to the O-ring.
- Install:
  Collar [B]
  Coupling [C]

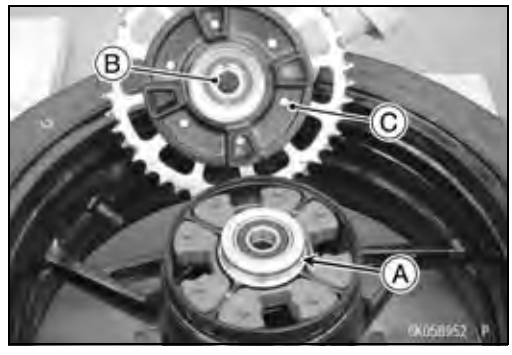

Coupling Bearing Removal

- Remove:
  Coupling
  Grease Seal
  Circlip [A]

Special Tool - Inside Circlip Pliers: 57001-143

Sprocket, Coupling

● Remove the bearing [A] by tapping from the wheel side.

Special Tool - Bearing Driver Set [B]: 57001-1129

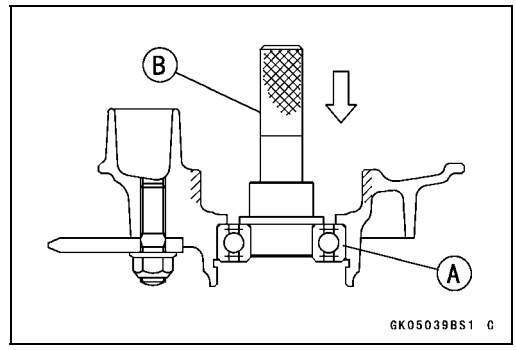

Coupling Bearing Installation

● Replace the bearing with a new one.
● Press in the bearing [A] until it is bottomed.

Special Tool - Bearing Driver Set [B]: 57001-1129

● Replace the circlip with a new one.

Special Tool - Inside Circlip Pliers: 57001-143

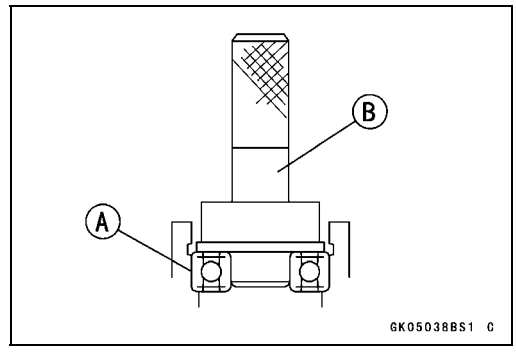

● Replace the grease seal with a new one.
● Press in the grease seal so that the seal surface is flush with the end of the hole.

Special Tool - Bearing Driver Set: 57001-1129

● Apply high-temperature grease to the grease seal lips.

Coupling Bearing Inspection

Since the coupling bearing is made to extremely close tolerances, the clearance can not normally be measured.

NOTE

○*It is not necessary to remove the coupling bearing for inspection. If the bearing is removed, it will need to be replaced with a new one.*

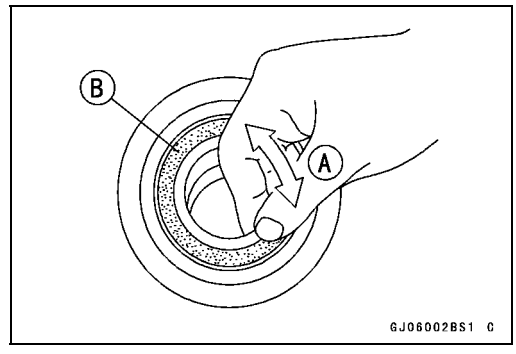

● Turn the bearing in the coupling back and forth [A] while checking for plays, roughness or binding.
★If the bearing play, roughness or binding is found, replace the bearing.
● Examine the bearing seal [B] for tears or leakage.
★If the seal is torn or is leaking, replace the bearing.

Coupling Bearing Lubrication

NOTE

○*Since the coupling bearing is packed with grease and sealed, lubrication is not required.*

Sprocket, Coupling

Coupling Damper Inspection

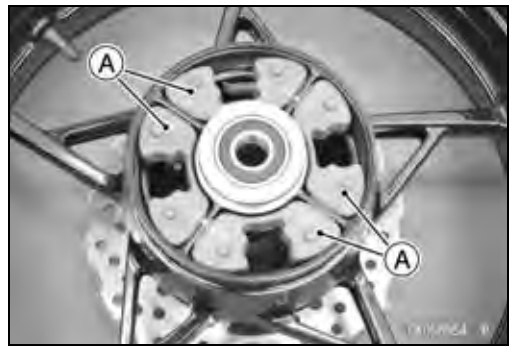

- Remove the rear wheel coupling, and inspect the rubber dampers [A].
- Replace the damper if it appears damaged or deteriorated.

Sprocket Wear Inspection

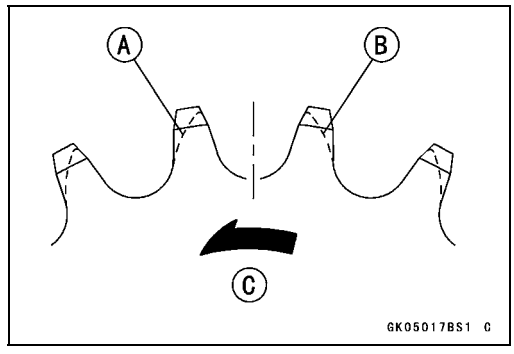

- Visually inspect the engine and rear sprocket teeth for wear and damage.

★If the teeth are worn as illustrated, replace the sprocket, and inspect the drive chain wear (see Drive Chain Wear Inspection in the Periodic Maintenance chapter).

Worn Tooth (Engine Sprocket) [A]
Worn Tooth (Rear Sprocket) [B]
Direction of Rotation [C]

NOTE

○*If a sprocket requires replacement, the chain is probably worn also. When replacing a sprocket, inspect the chain.*

Rear Sprocket Warp Inspection

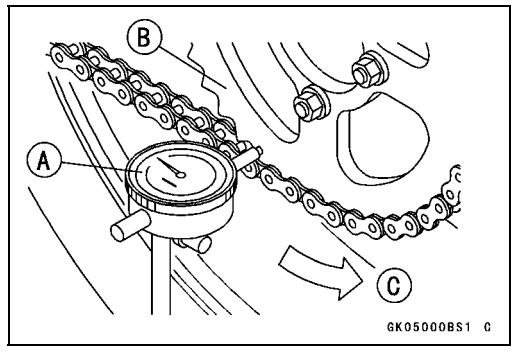

- Raise the rear wheel off the ground with the stand so that it will turn freely.
- Set a dial gauge [A] against the rear sprocket [B] near the teeth as shown, and rotate [C] the rear wheel to measure the sprocket runout (warp). The difference between the highest and lowest dial gauge readings is the amount of runout (warp).

★If the runout exceeds the service limit, replace the rear sprocket.

Rear Sprocket Warp

Standard: TIR 0.4 mm (0.016 in.) or less

Service Limit: TIR 0.5 mm (0.020 in.)

Brakes

Table of Contents

Exploded View 12-4
Specifications 12-10
Brake Lever, Brake Pedal 12-11
  Brake Lever Position Adjustment 12-11
  Brake Pedal Position Inspection 12-11
  Brake Pedal Position Adjustment 12-11
  Brake Pedal Removal 12-11
  Brake Pedal Installation 12-12
Calipers 12-13
  Front Caliper Removal 12-13
  Rear Caliper Removal 12-13
  Caliper Installation 12-13
  Front Caliper Disassembly 12-14
  Front Caliper Assembly 12-14
  Rear Caliper Disassembly 12-14
  Rear Caliper Assembly 12-15
  Caliper Fluid Seal Damage Inspection 12-15
  Caliper Dust Seal Damage Inspection 12-15
  Rear Caliper Dust Boot and Friction Boot Damage Inspection 12-16
  Caliper Piston and Cylinder Damage Inspection 12-16
  Rear Caliper Holder Wear Inspection 12-16
Brake Pads 12-17
  Front Brake Pad Removal 12-17
  Front Brake Pad Installation 12-17
  Rear Brake Pad Removal 12-17
  Rear Brake Pad Installation 12-18
  Brake Pad Wear Inspection 12-18
Master Cylinder 12-19
  Front Master Cylinder Removal 12-19
  Front Master Cylinder Installation 12-19
  Rear Master Cylinder Removal 12-19
  Rear Master Cylinder Installation 12-20
  Front Master Cylinder Disassembly 12-21
  Rear Master Cylinder Disassembly 12-21
  Master Cylinder Assembly 12-21
  Master Cylinder Inspection (Visual Inspection) 12-22
Brake Disc 12-23
  Brake Disc Removal 12-23
  Brake Disc Installation 12-23
  Brake Disc Wear Inspection 12-23
  Brake Disc Warp Inspection 12-23
Brake Fluid 12-24
  Brake Fluid Level Inspection 12-24
  Brake Fluid Change 12-24
  Brake Line Bleeding 12-24
Brake Hose 12-27
  Brake Hose and Pipe Removal/Installation 12-27
  Brake Hose and Pipe Inspection 12-27
Anti-Lock Brake System (Equipped Models) 12-28
  Parts Location 12-28

ABS Servicing Precautions 12-31
ABS Troubleshooting Outline 12-33
Inquiries to Rider 12-36
Self-diagnosis Outline 12-40
Self-diagnosis Procedures 12-40
Service Code Clearing Procedures 12-41
How to Read Service Codes 12-44
How to Erase Service Codes 12-44
Yellow ABS Indicator Light (LED) Inspection 12-46
ABS Unit Solenoid Valve Inspection (Service Code 13, 14, 17, 18) 12-49
ABS Solenoid Valve Relay Inspection (Service Code 19) 12-49
Front, Rear Wheel Rotation Difference Abnormal Inspection (Service Code 25) 12-49
ABS Motor Inspection (Service Code 35) 12-50
Wheel Rotation Sensor Signal Abnormal Inspection (Front: Service Code 42) (Rear: Service Code 44) 12-50
Front or Rear Wheel Rotation Sensor Wiring Inspection (Service Code 43) 12-51
Rear Wheel Rotation Sensor Wiring Inspection (Service Code 45) 12-53
Power Supply Voltage Abnormal Inspection (Service Code 52: Low Voltage) (Service Code 53: High Voltage) 12-55
ABS Hydraulic Unit Internal Error Inspection (Service Code 55) 12-55
ABS Hydraulic Unit Removal 12-56
ABS Hydraulic Unit Installation 12-57
ABS Hydraulic Unit Inspection 12-58
Front Wheel Rotation Sensor Removal 12-58
Front Wheel Rotation Sensor Installation 12-59
Rear Wheel Rotation Sensor Removal 12-59
Rear Wheel Rotation Sensor Installation 12-61
Wheel Rotation Sensor Inspection 12-61
Wheel Rotation Sensor Air Gap Inspection 12-62
Wheel Rotation Sensor Rotor Inspection 12-62
Fuse Removal 12-62
Fuse Installation 12-62
Fuse Inspection 12-62

This page intentionally left blank.

Exploded View

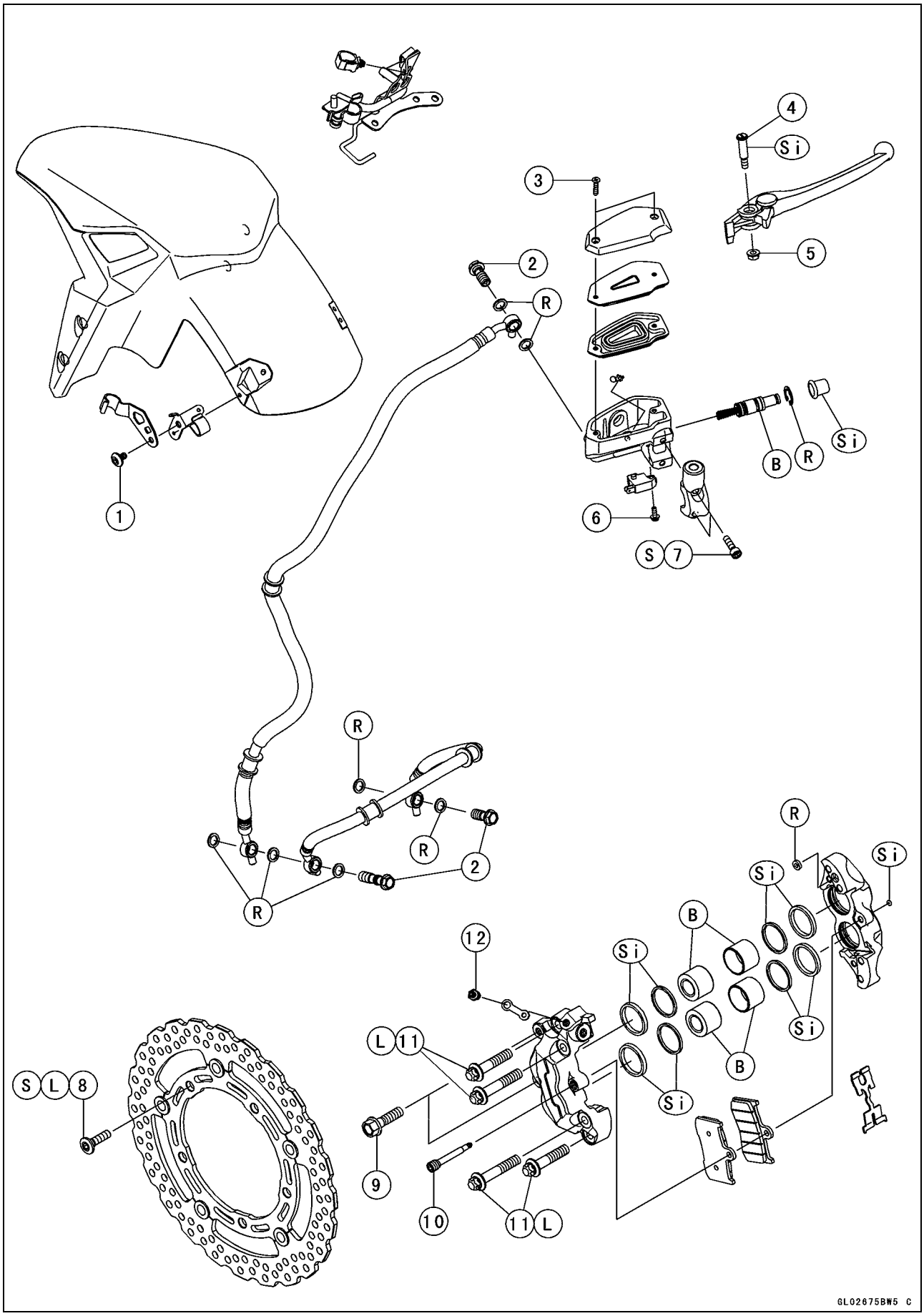

Exploded View

No.	Fastener	Torque			Remarks
		N·m	kgf·m	ft·lb	
1	Brake Hose Clamp Bolt	6.9	0.70	61 in·lb	
2	Brake Hose Banjo Bolts	25	2.5	18	
3	Front Brake Reservoir Cap Screw	1.5	0.15	13 in·lb	
4	Brake Lever Pivot Bolt	1.0	0.10	8.9 in·lb	Si
5	Brake Lever Pivot Bolt Locknut	5.9	0.60	52 in·lb	
6	Front Brake Light Switch Screw	1.2	0.12	11 in·lb	
7	Front Master Cylinder Clamp Bolts	11	1.1	97 in·lb	S
8	Front Brake Disc Mounting Bolts	27	2.8	20	L, S
9	Front Caliper Mounting Bolts	25	2.5	18	
10	Front Brake Pad Pins	17	1.7	13	
11	Front Caliper Assembly Bolts	22	2.2	16	L
12	Bleed Valves	5.4	0.55	48 in·lb	

B: Apply brake fluid.
L: Apply a non-permanent locking agent.
R: Replacement Parts
S: Follow the specified tightening sequence.
Si: Apply silicone grease.

Exploded View

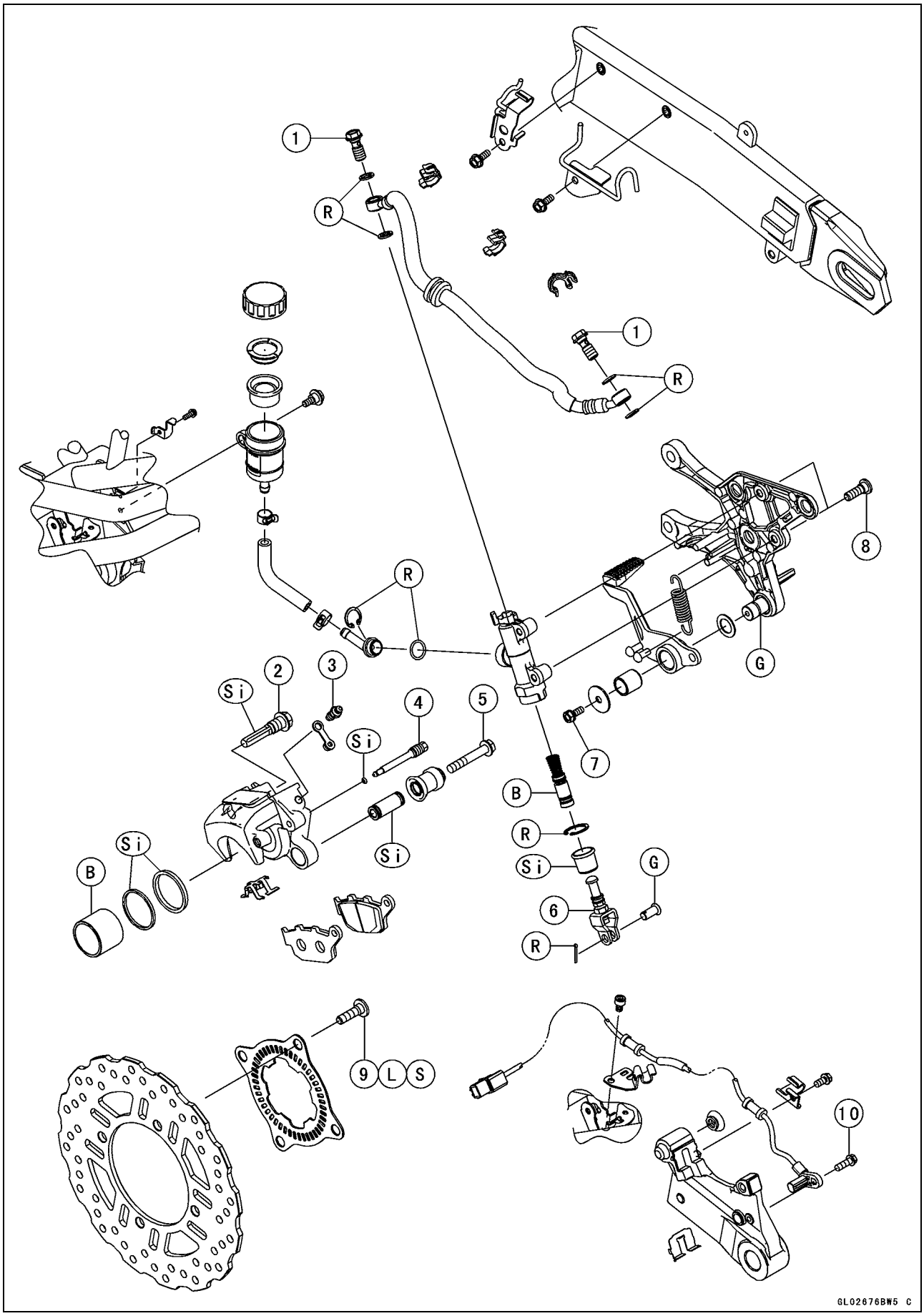

Exploded View

No.	Fastener	Torque			Remarks
		N·m	kgf·m	ft·lb	
1	Brake Hose Banjo Bolts	25	2.5	18	
2	Rear Caliper Pin Bolt	27	2.8	20	Si
3	Bleed Valve	5.4	0.55	48 in·lb	
4	Rear Brake Pad Pin	17	1.7	13	
5	Rear Caliper Mounting Bolt	22	2.2	16	
6	Rear Master Cylinder Push Rod Locknut	17	1.7	13	
7	Brake Pedal Bolt	8.8	0.90	78 in·lb	
8	Rear Master Cylinder Mounting Bolts	25	2.5	18	
9	Rear Brake Disc Mounting Bolts	27	2.8	20	L, S
10	Rear Wheel Rotation Sensor Bolt	6.9	0.70	61 in·lb	

B: Apply brake fluid.
G: Apply grease.
L: Apply a non-permanent locking agent.
R: Replacement Parts
S: Follow the specified tightening sequence.
Si: Apply silicone grease.

Exploded View

ABS Equipped Models

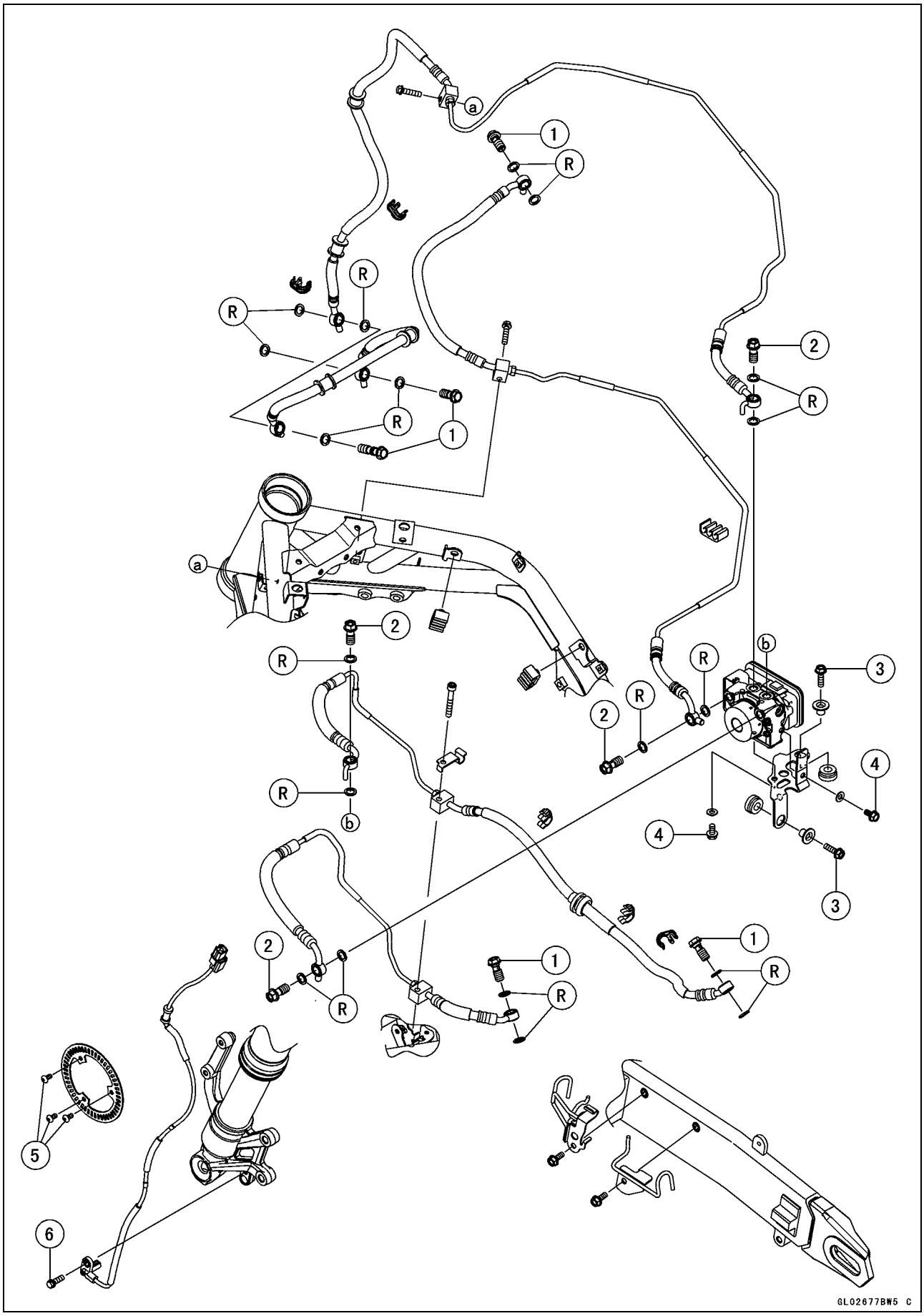

Exploded View

No.	Fastener	Torque			Remarks
		N·m	kgf·m	ft·lb	
1	Brake Hose Banjo Bolts	25	2.5	18	
2	Brake Pipe Banjo Bolts	33	3.4	24	
3	ABS Hydraulic Unit Bracket Bolts	8.8	0.90	78 in·lb	
4	ABS Hydraulic Unit Bolts	8.8	0.90	78 in·lb	
5	Front Wheel Rotation Sensor Rotor Bolts	4.15	0.423	37 in·lb	
6	Front Wheel Rotation Sensor Bolt	6.9	0.70	61 in·lb	

R: Replacement Parts

Specifications

Item	Standard	Service Limit
Brake Lever, Brake Pedal		
Brake Lever Position	5-way adjustable (to suit rider)	– – –
Brake Lever Free Play	Non-adjustable	– – –
Pedal Free Play	Non-adjustable	– – –
Pedal Position	About 50 mm (2.0 in.) below top of footpeg	– – –
Brake Pads		
Lining Thickness:		
Front	4 mm (0.16 in.)	1 mm (0.04 in.)
Rear	5 mm (0.20 in.)	1.4 mm (0.06 in.)
Brake Discs		
Thickness	4.8 ~ 5.2 mm (0.19 ~ 0.20 in.)	4.5 mm (0.18 in.)
Runout	TIR 0.15 mm (0.0059 in.) or less	TIR 0.3 mm (0.013 in.)
Brake Fluid		
Grade	DOT4	– – –
ABS (Equipped Models)		
ABS Hydraulic Unit:		
Make	NISSIN	– – –
Wheel Rotation Sensor Air Gap:		
Front	0.2 ~ 1.5 mm (0.01 ~ 0.06 in.)	– – –
Rear	0.2 ~ 1.5 mm (0.01 ~ 0.06 in.)	– – –

Brake Lever, Brake Pedal

Brake Lever Position Adjustment

The brake lever adjuster has 5 positions so that the brake lever position can be adjusted to suit the operator's hand.

- Push the lever forward and turn the adjuster [A] to align the number with the arrow mark [B] on the lever.

○The distance from the grip to the lever is minimum at number 5 and maximum at number 1.

Brake Pedal Position Inspection

- Check that the brake pedal [A] is in the correct position.
  Footpeg [B]

Pedal Position

Standard: About 50 mm (2.0 in.) [C] below top of footpeg

★If it is incorrect, adjust the brake pedal position.

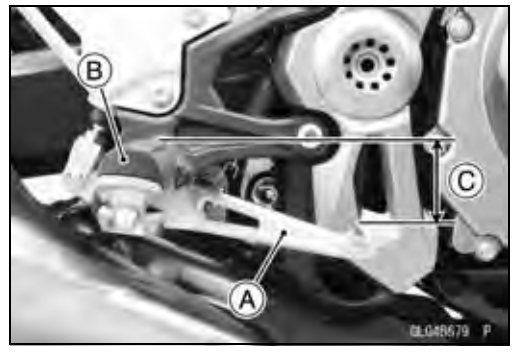

Brake Pedal Position Adjustment

NOTE

○*Usually it is not necessary to adjust the pedal position, but always adjust it when the push rod locknut has been loosened.*

- Loosen the locknut [A] and turn the push rod with the hex head [B] to achieve the correct pedal position.

★If the length [C] shown is **70 ±1 mm (2.8 ±0.04 in.)**, the pedal position will be within the standard range.

- Tighten:

Torque - Rear Master Cylinder Push Rod Locknut: 17 N·m (1.7 kgf·m, 13 ft·lb)

- Check the brake light switch operation (see Brake Light Switch Operation Inspection in the Periodic Maintenance chapter).

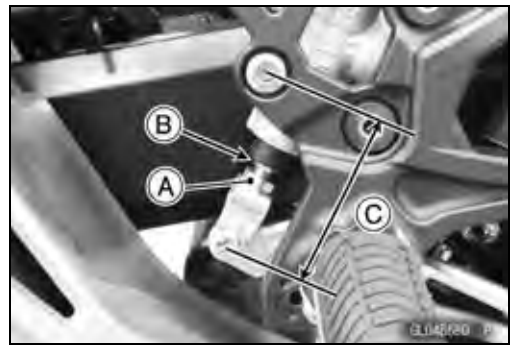

Brake Pedal Removal

- Remove:
  Right Front Footpeg Bracket Bolts [A]

Brake Lever, Brake Pedal

- Remove:
  Cotter Pin [A]
  Joint Pin [B]
  Rear Brake Light Switch Spring [C]
  Return Spring [D]
  Brake Pedal Bolt [E]
  Brake Pedal [F]

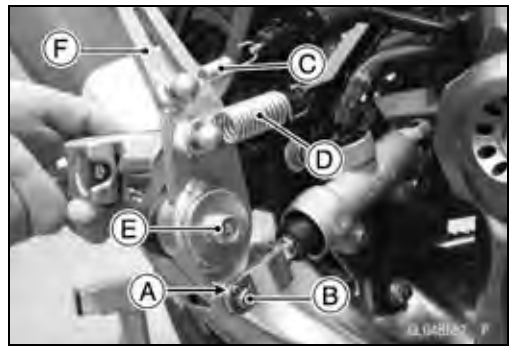

Brake Pedal Installation

- Apply grease to the brake pedal pivot shaft [A] and install the washer [B].
- Install:
  Brake Pedal [C]
  Washer [D]
- Tighten:

  Torque - Brake Pedal Bolt [E]: 8.8 N·m (0.90 kgf·m, 78 in·lb)

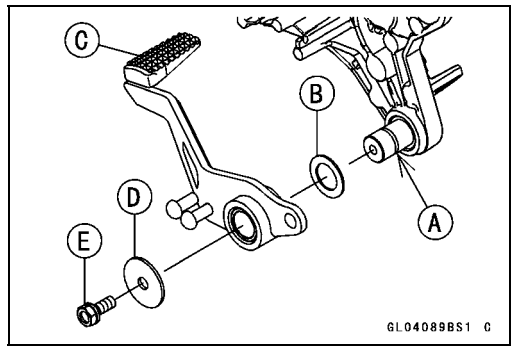

- Install the return spring [A] and the rear brake light switch spring [B] as shown.
  Front Footpeg Bracket [C]
  Brake Pedal [D]
  Rear Brake Light Switch [E]

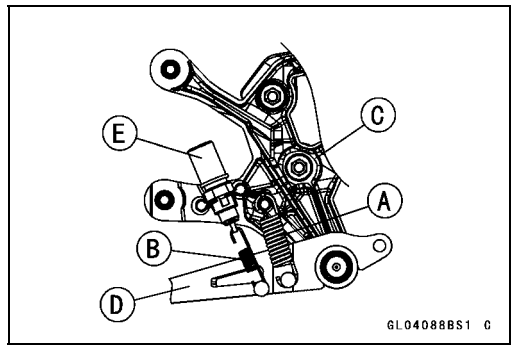

- Apply grease to the joint pin [A], and install it.
- Replace the cotter pin [B] with a new one.
- Insert the cotter pin and bend the pin ends [C].
- Install the right front footpeg bracket to the frame.
- Tighten:

  Torque - Front Footpeg Bracket Bolts: 25 N·m (2.5 kgf·m, 18 ft·lb)

- Check the brake pedal position (see Brake Pedal Position Inspection).

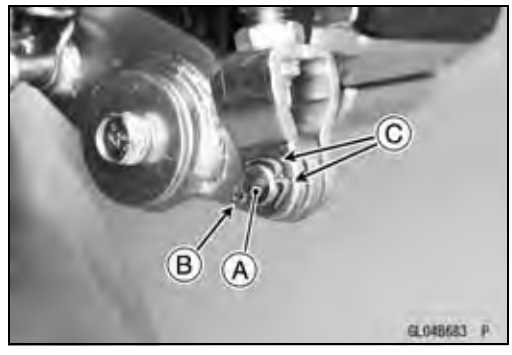

Calipers

Front Caliper Removal

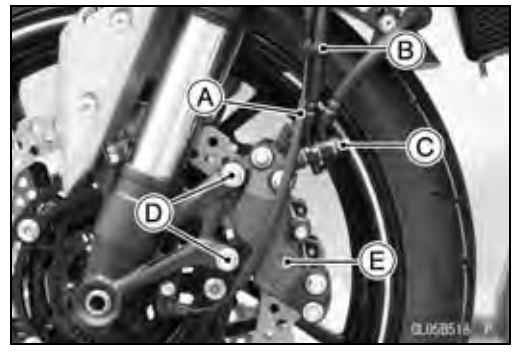

- For ABS equipped models, note the following.

○Free the front wheel rotation sensor lead [A] from the clamp [B].

- Loosen the banjo bolt [C] at the brake hose lower end, and tighten it loosely.
- Remove the caliper mounting bolts [D], and detach the caliper [E] from the disc.

NOTICE
Do not loosen the caliper assembly bolts. Take out only the caliper mounting bolts for caliper removal. Loosening the caliper assembly bolts will cause brake fluid leakage.

- Remove the banjo bolt and disconnect the brake hoses from the caliper.

○Temporarily secure the end of the brake hose to some high place to keep fluid loss to a minimum.

NOTICE
Brake fluid quickly damages painted plastic surfaces; any spilled fluid should be completely washed away immediately.

Rear Caliper Removal

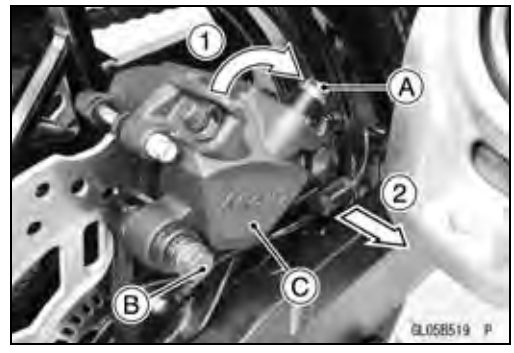

- Loosen the banjo bolt [A] at the brake hose lower end, and tighten it loosely.
- Remove the rear caliper mounting bolt [B], and detach the caliper [C] from the disc.
- Remove the banjo bolt and disconnect the brake hose from the caliper.

○Temporarily secure the end of the brake hose to some high place to keep fluid loss to a minimum.

NOTICE
Brake fluid quickly damages painted plastic surfaces; any spilled fluid should be completely washed away immediately.

Caliper Installation

- Install the caliper and brake hose lower end.

○Replace the washers on each side of hose fitting with new ones.

○Touch the brake hoses to the stopper of the caliper.

Calipers

Rear Caliper

● Install:
Dust Boot [A]
Guide [B]

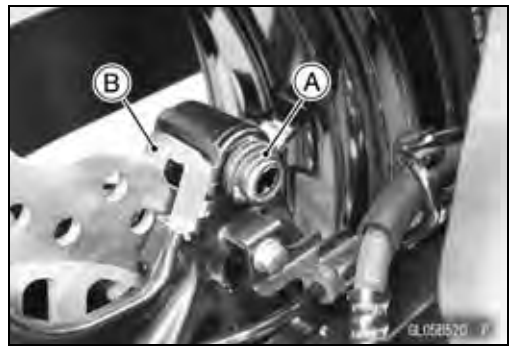

● Apply silicone grease to the rear caliper pin bolt.
● Fit the rear brake pads [A] to the guide [B].

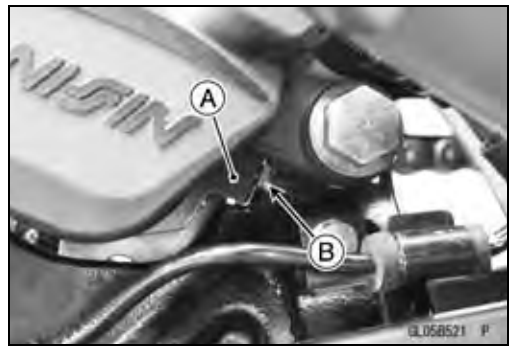

● Tighten:

Torque - Front Caliper Mounting Bolts: 25 N·m (2.5 kgf·m, 18 ft·lb)
Rear Caliper Mounting Bolt: 22 N·m (2.2 kgf·m, 16 ft·lb)
Brake Hose Banjo Bolts: 25 N·m (2.5 kgf·m, 18 ft·lb)

● Run the front wheel rotation sensor lead correctly (see Cable, Wire, and Hose Routing section in the Appendix chapter).
● Check the fluid level in the brake reservoirs.
● Bleed the brake line (see Brake Line Bleeding).
● Check the brake for good braking power, no brake drag, and no fluid leakage.

⚠ WARNING

After servicing, it takes several applications of the brake lever or pedal before the brake pads contact the disc, which could result in increased stopping distance and cause an accident resulting in injury or death. Do not attempt to ride the motorcycle until a firm brake lever or pedal is obtained by pumping the lever or pedal until the pads are against the disc.

Front Caliper Disassembly

● Refer to the Caliper Rubber Parts Replacement in the Periodic Maintenance chapter.

Front Caliper Assembly

● Refer to the Caliper Rubber Parts Replacement in the Periodic Maintenance chapter.

Rear Caliper Disassembly

● Refer to the Caliper Rubber Parts Replacement in the Periodic Maintenance chapter.

Calipers

Rear Caliper Assembly

● Refer to the Caliper Rubber Parts Replacement in the Periodic Maintenance chapter.

Caliper Fluid Seal Damage Inspection

The fluid seal (piston seal) [A] is placed around the piston to maintain clearance between the pad and the disc. If the seal is in a poor condition, it could lead the pad to wear excessively or the brake to drag, which may cause the temperature of the discs or the brake fluid to increase.

● Replace the fluid seal if it exhibits any of the conditions listed below.

○Brake fluid leakage around the pad.

○Brakes overheat.

○Considerable difference in inner and outer pad wear.

○Seal and piston are stuck together.

★If the fluid seal is replaced, replace the dust seal [B] as well. Also, replace all seals every other time the pads are changed.

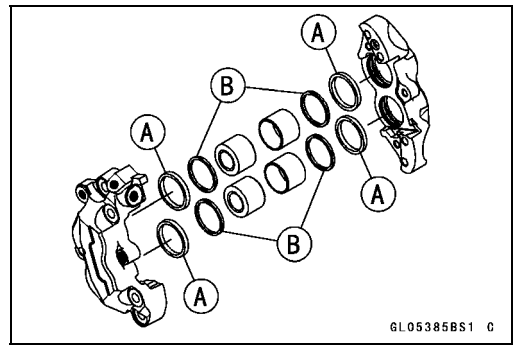

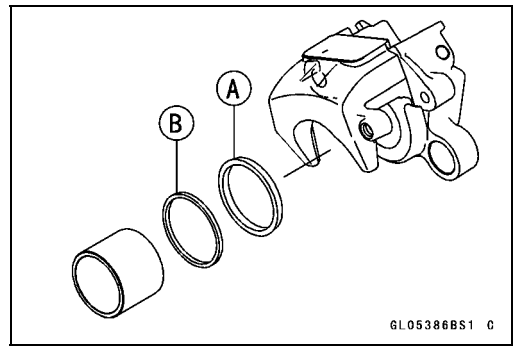

Caliper Dust Seal Damage Inspection

● Check that the dust seals [A] are not cracked, worn, swollen, or otherwise damaged.

★If they show any damage, replace the dust seals with new ones.

Pistons [B]

Fluid Seals [C]

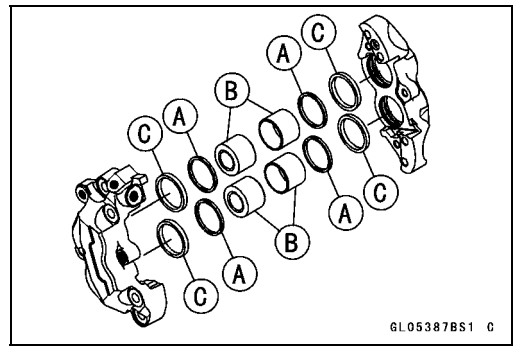

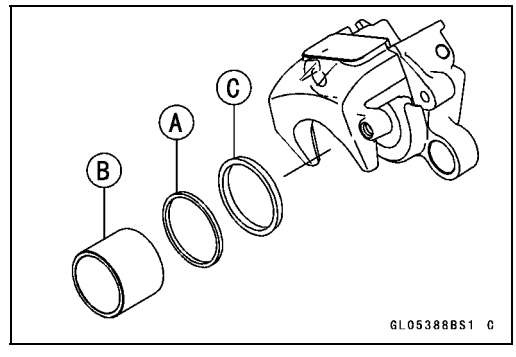

Calipers

Rear Caliper Dust Boot and Friction Boot Damage Inspection

● Check that the dust boot [A] and friction boot [B] are not cracked, worn, swollen, or otherwise damaged.

★If they show any damage, replace it.

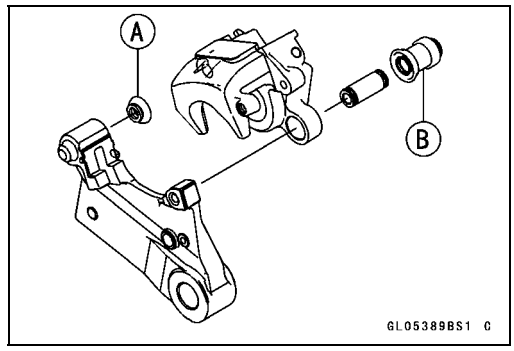

Caliper Piston and Cylinder Damage Inspection

● Visually inspect the pistons [A] and cylinder surfaces [B].

★Replace the caliper if the cylinder and piston are badly scores or rusty.

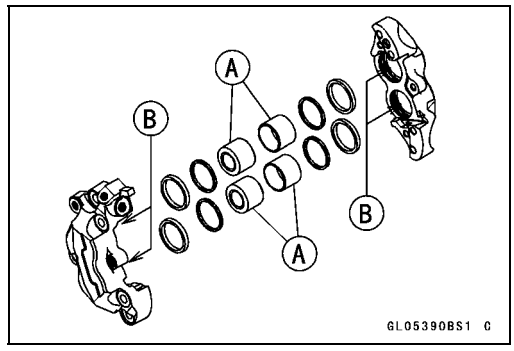

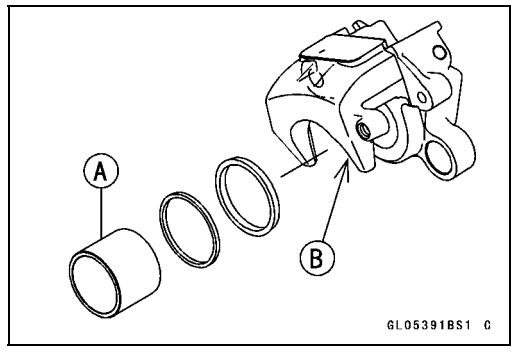

Rear Caliper Holder Wear Inspection

The caliper body must slide smoothly on the rear caliper pin bolt [A] and sleeve [B]. If the body does not slide smoothly, one pad will wear more than the other, pad wear will increase, and constant drag on the disc will raise brake and brake fluid temperature.

● Check to see that the rear caliper pin bolt and the sleeve are not badly worn or stepped, and that the rubber boots are not damaged.

★If the rear caliper pin bolt is damaged, replace the rear caliper pin bolt.

★If the sleeve is damaged, replace the sleeve.

★If the rubber boots are damaged, replace the rubber boot.

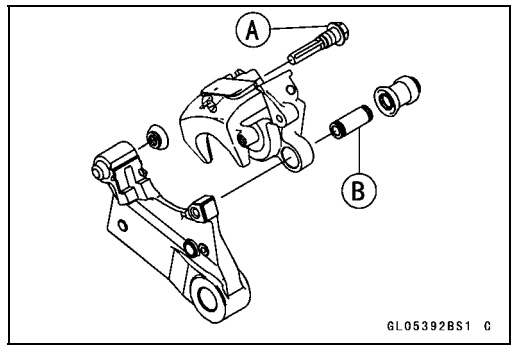

Brake Pads

Front Brake Pad Removal

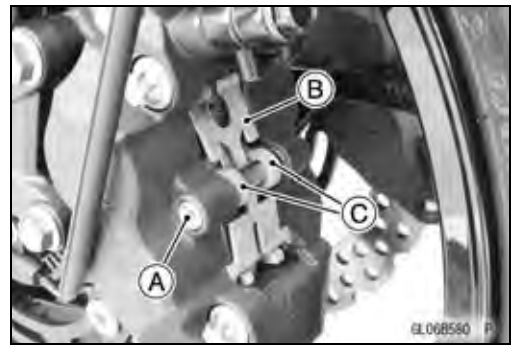

- Remove:
  Pad Pin [A]
  Pad Spring [B]
  Brake Pads [C]

Front Brake Pad Installation

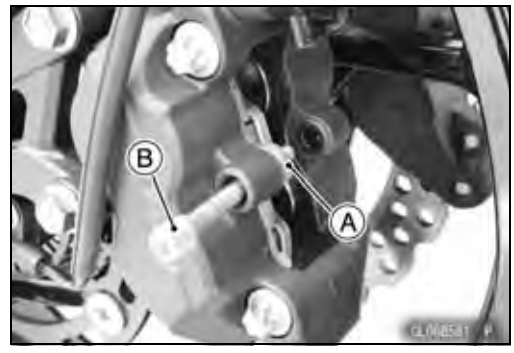

- Push the caliper pistons in by hand as far as they will go.
- Apply silicone grease to the stopper ring of the pad pin.
- Install the outside pad [A] and insert the pad pin [B] as shown.

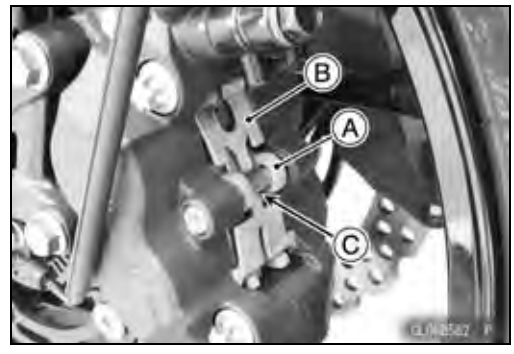

- Set:
  Inside Pad [A]
  Pad Spring [B]

○Push down the pin holder [C] and insert the pad pin.

- Tighten:

Torque - Front Brake Pad Pin: 17 N·m (1.7 kgf·m, 13 ft·lb)

⚠ WARNING

After servicing, it takes several applications of the brake lever before the brake pads contact the disc, which could result in increased stopping distance and cause an accident resulting in injury or death. Do not attempt to ride the motorcycle until a firm brake lever is obtained by pumping the lever until the pads are against the disc.

Rear Brake Pad Removal

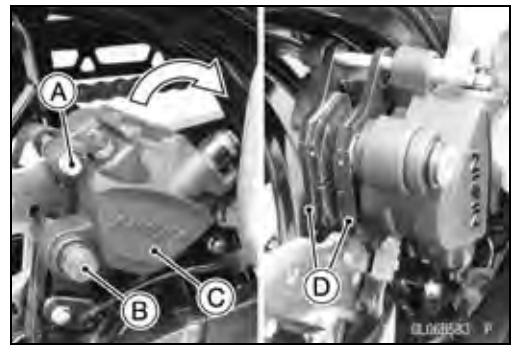

- Loosen the pad pin [A].
- Remove the rear caliper mounting bolt [B].
- Turn the rear caliper [C] forward.
- Remove:
  Pad Pin
  Brake Pads [D]

Brake Pads

Rear Brake Pad Installation

- Check that the pad spring [A] is in place on the rear caliper.

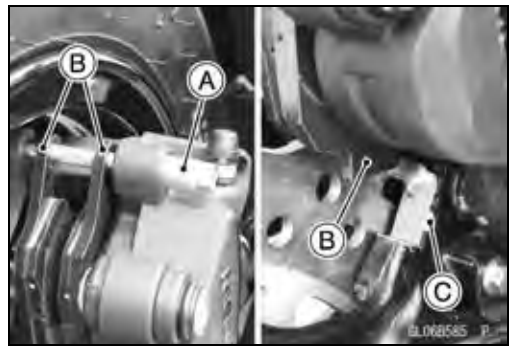

- Apply silicone grease to the stopper ring of the pad pin [A].
- Insert the pad pin through the brake pads [B] and tighten the pad pin temporarily.
- Fit the brake pads to the guide [C].
- Tighten:

Torque - Rear Caliper Mounting Bolt: 22 N·m (2.2 kgf·m, 16 ft·lb)
Rear Brake Pad Pin: 17 N·m (1.7 kgf·m, 13 ft·lb)

⚠ WARNING

After servicing, it takes several applications of the brake pedal before the brake pads contact the disc, which could result in increased stopping distance and cause an accident resulting in injury or death. Do not attempt to ride the motorcycle until a firm brake pedal is obtained by pumping the pedal until the pads are against the disc.

Brake Pad Wear Inspection

- Refer to the Brake Pad Wear Inspection in the Periodic Maintenance chapter.

Master Cylinder

Front Master Cylinder Removal

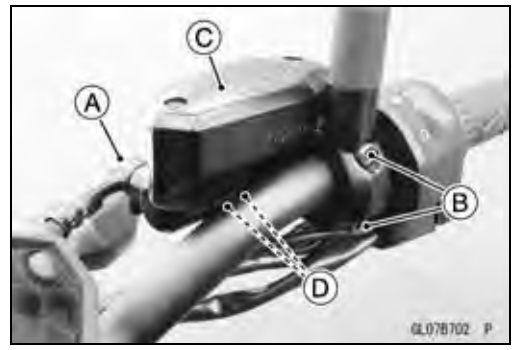

- Remove the banjo bolt [A] to disconnect the brake hose from the master cylinder.

○Temporarily secure the end of the brake hose to some high place to keep fluid loss to a minimum.

- Remove the clamp bolts [B], and take off the master cylinder [C] as an assembly with the reservoir, brake lever, and brake switch installed.
- Disconnect the front brake light switch connectors [D].

NOTICE
Brake fluid quickly damages painted plastic surfaces; any spilled fluid should be completely washed away immediately.

Front Master Cylinder Installation

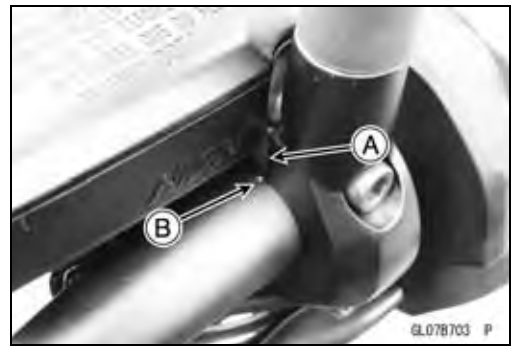

- Set the front master cylinder to match its mating surface [A] to the punch mark [B] of the handlebars.
- Tighten the upper clamp bolt first, and then the lower clamp bolt.

Torque - Front Master Cylinder Clamp Bolts: 11 N·m (1.1 kgf·m, 97 in·lb)

- Connect the front brake light switch connectors.
- Replace the washers that are on each side of the hose fitting with new ones.
- Install the brake hose.

○Touch the brake hose to the stopper of the front master cylinder.

- Tighten:

Torque - Brake Hose Banjo Bolt: 25 N·m (2.5 kgf·m, 18 ft·lb)

- Bleed the brake line (see Brake Line Bleeding).
- Check the brake for good braking power, no brake drag, and no fluid leakage.

Rear Master Cylinder Removal

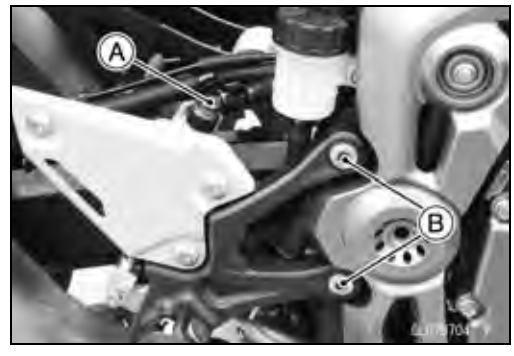

- Remove the brake hose banjo bolt [A] and disconnect the brake hose from the rear master cylinder.

○Temporarily secure the end of the brake hose to some high place to keep fluid loss to a minimum.

NOTICE
Brake fluid quickly damages painted plastic surfaces; any spilled fluid should be completely washed away immediately.

- Remove:

Right Front Footpeg Bracket Bolts [B]

Master Cylinder

● Remove:
Right Heel Guard Bolts [A], Nuts and Washers
Right Heed Guard [B]

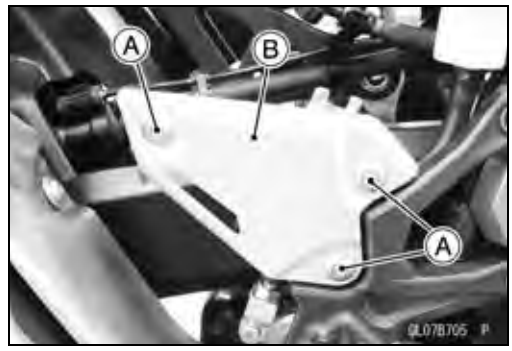

● Tighten the right front footpeg bracket bolts temporarily.
● Remove:
Rear Master Cylinder Mounting Bolts [A]

● Remove:
Right Front Footpeg Bracket Bolts
Cotter Pin [A]
Joint Pin [B]
● Slide the clamp [C].
● Disconnect the reservoir hose lower end, and drain the brake fluid into a container.

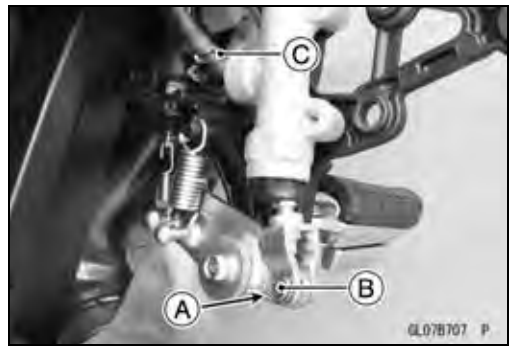

Rear Master Cylinder Installation

● Install the reservoir hose lower end, and install the clamp.
● Replace the cotter pin [A] with a new one.
● Insert the cotter pin and bend the pin ends [B].

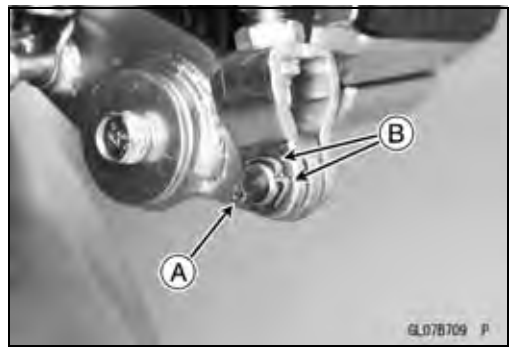

● Tighten the right front footpeg bracket bolts temporarily.
● Tighten:

Torque - Rear Master Cylinder Mounting Bolts [A]: 25 N·m (2.5 kgf·m, 18 ft·lb)

NOTE

○*Depress the brake pedal [B] and then align the holes of the master cylinder [C].*

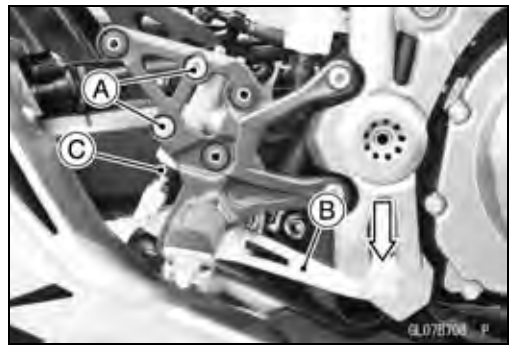

Master Cylinder

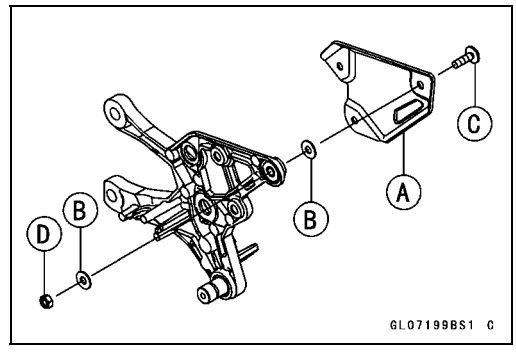

- Remove:
  Right Front Footpeg Bracket Bolts
- Install:
  Right Heed Guard [A]
  Washers [B]
  Right Heel Guard Bolts [C] and Nuts [D]
- Tighten:

Torque - Heel Guard Bolts: 6.9 N·m (0.70 kgf·m, 61 in·lb)
Front Footpeg Bracket Bolts: 25 N·m (2.5 kgf·m, 18 ft·lb)

- Replace the washers that are on each side of the hose fitting with new ones.
- Install the brake hose.

○Touch the brake hose to the stopper of the rear master cylinder.

- Tighten:

Torque - Brake Hose Banjo Bolt: 25 N·m (2.5 kgf·m, 18 ft·lb)

- Bleed the brake line (see Brake Line Bleeding).
- Check the brake for good braking power, no brake drag, and no fluid leakage.

Front Master Cylinder Disassembly

- Refer to the Master Cylinder Rubber Parts Replacement in the Periodic Maintenance chapter.

Rear Master Cylinder Disassembly

- Refer to the Master Cylinder Rubber Parts Replacement in the Periodic Maintenance chapter.

Master Cylinder Assembly

- Refer to the Master Cylinder Rubber Parts Replacement in the Periodic Maintenance chapter.

Master Cylinder

Master Cylinder Inspection (Visual Inspection)

- Remove the master cylinders (see Front/Rear Master Cylinder Removal).
- Disassemble the front and rear master cylinders (see Master Cylinder Rubber Parts Replacement in the Periodic Maintenance chapter).
- Check that there are no scratches, rust or pitting on the inner wall [A] of each master cylinder and on the outside of each piston [B].

★If a master cylinder or piston shows any damage, replace them.

- Inspect the primary cup [C] and secondary cup [D].

★If a cup is worn, damaged softened (rotted), or swollen, the piston assembly should be replaced to renew the cups.

★If fluid leakage is noted at the brake lever, the piston assembly should be replaced to renew the cups.

- Check the dust covers [E] for damage.

★If they are damaged, replace them.

- Check the piston return springs [F] for any damage.

★If the springs are damaged, replace them.

- Check that relief port [G] and supply port [H] are not plugged.

★If the relief port becomes plugged, the brake pads will drag on the disc. Blow the ports clean with compressed air.

Front Master Cylinder [I]
Rear Master Cylinder [J]

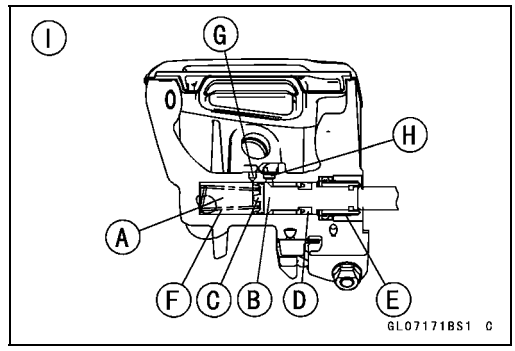

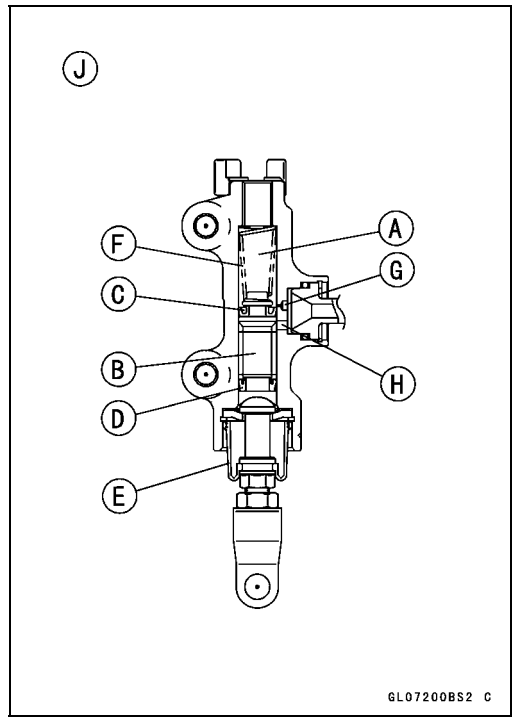

Brake Disc

Brake Disc Removal

- Remove the wheels (see Front/Rear Wheel Removal in the Wheels/Tires chapter).
- Remove the brake disc mounting bolts [A], and take off the disc [B].
- Remove the wheel rotation sensor rotor [C] only rear brake disc.

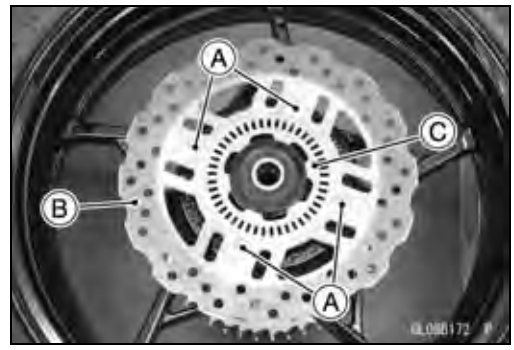

Brake Disc Installation

- Install the brake disc on the wheel so that the marked side [A] faces out.
- Install the wheel rotation sensor rotor on the brake disc so that the marked side faces out only rear brake disc.
- Apply a non-permanent locking agent to the threads of the front and rear brake disc mounting bolts.
- Tighten the front and rear brake disc mounting bolts following the specified tightening sequence.

  Front Brake Discs [B]
  Rear Brake Disc [C]

Torque - Brake Disc Mounting Bolts: 27 N·m (2.8 kgf·m, 20 ft·lb)

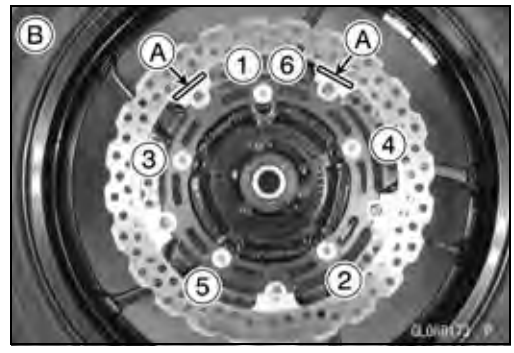

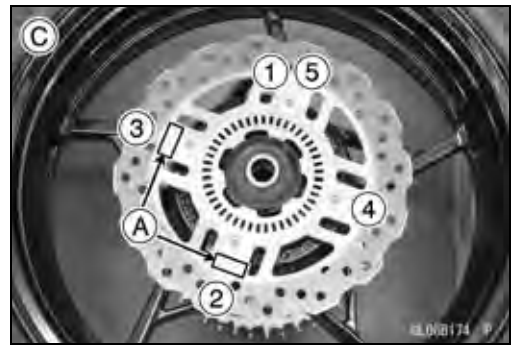

Brake Disc Wear Inspection

- Measure the thickness of each disc [A] at the point where it has worn the most.

★If the disc has worn past the service limit, replace it.

Measuring Area [B]

Brake Discs Thickness

Standard: 4.8 ~ 5.2 mm (0.19 ~ 0.20 in.)

Service Limit: 4.5 mm (0.18 in.)

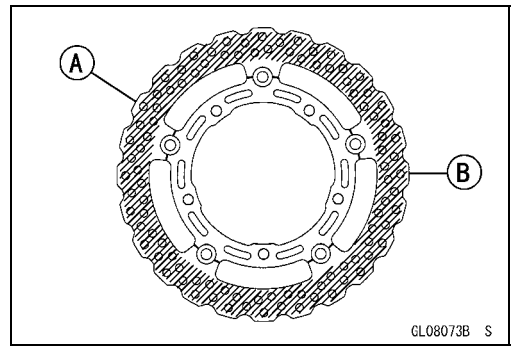

Brake Disc Warp Inspection

- Raise the front/rear wheel off the ground with a suitable stand.

○For front disc inspection, turn the handlebars fully to one side.

- Set up a dial gauge against the disc [A] as shown and measure disc runout, while turning [B] the wheel by hand.

★If runout exceeds the service limit, replace the disc.

Disc Runout

Standard: TIR 0.15 mm (0.0059 in.) or less

Service Limit: TIR 0.3 mm (0.013 in.)

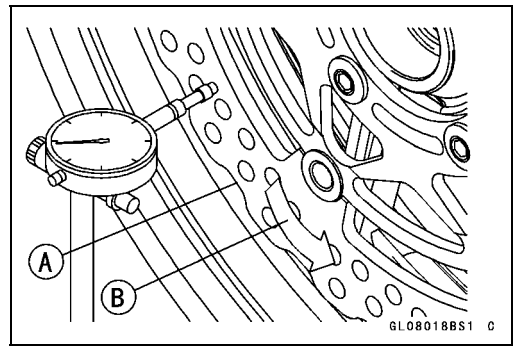

Brake Fluid

Brake Fluid Level Inspection

● Refer to the Brake Fluid Level Inspection in the Periodic Maintenance chapter.

Brake Fluid Change

● Refer to the Brake Fluid Change in the Periodic Maintenance chapter.

Brake Line Bleeding

The brake fluid has a very low compression coefficient so that almost all the movement of the brake lever or pedal is transmitted directly to the caliper for braking action. Air, however, is easily compressed. When air enters the brake lines, brake lever or pedal movement will be partially used in compressing the air. This will make the lever or pedal feel spongy, and there will be a loss in braking power.

⚠ WARNING

Air in the brake lines diminish braking performance and can cause an accident resulting in injury or death. If the brake lever or pedal has a soft or "spongy" feeling mushy when it is applied, there might be air in the brake lines or the brake may be defective. Do not operate the vehicle and service the brake system immediately.

NOTICE

Brake fluid quickly damages painted plastic surfaces; any spilled fluid should be completely washed away immediately.

NOTE

○*The procedure to bleed the front brake line is as follows. Bleeding the rear brake line is the same as for the front brake.*

● Remove:
Front Brake Reservoir Cap Screws [A]
Front Brake Reservoir Cap [B]
Diaphragm Plate
Diaphragm

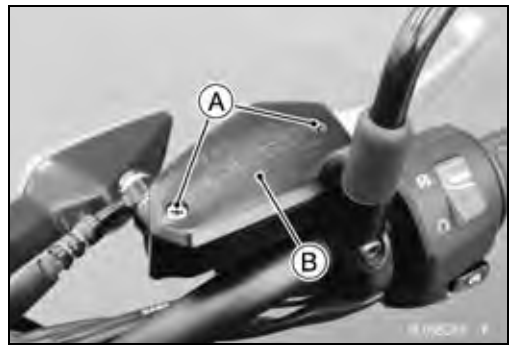

● Fill the reservoir with fresh brake fluid to the upper level line in the reservoir.
● Slowly pump the brake lever several times until no air bubbles can be seen rising up through the fluid from the holes at the bottom of the reservoir.
○Bleed the air completely from the master cylinder by this operation.

Brake Fluid

- Remove the rubber cap [A] from the bleed valve on the caliper.
- Attach a clear plastic hose [B] to the bleed valve, and run the other end of the hose into a container.

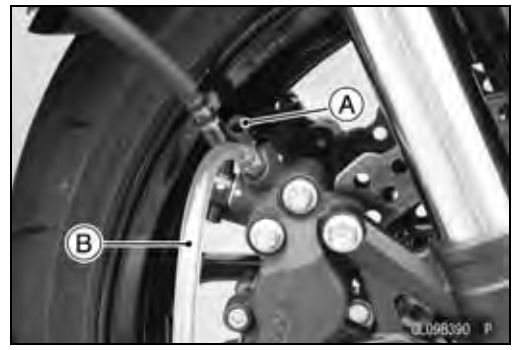

- Bleed the brake line and the caliper.

○Repeat this operation until no more air can be seen coming out into the plastic hose.

1. Pump the brake lever until it becomes hard, and apply the brake and hold it [A].
2. Quickly open and close [B] the bleed valve while holding the brake applied.
3. Release the brake [C].

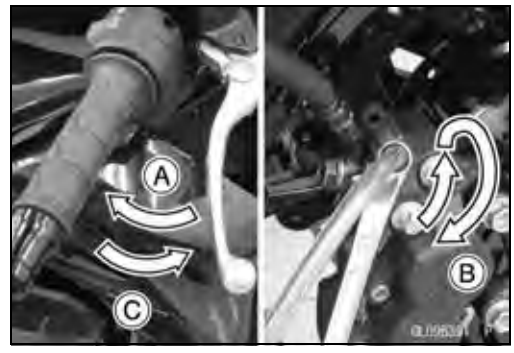

NOTICE

After pumping the brake lever several times, releasing it without opening and closing of the bleed valve may cause brake fluid to be blown back from the master cylinder reservoir. Brake fluid spilt on painted surfaces and plastic parts will quickly damage them. Be sure to open and close the bleed valve.

NOTE

○*The fluid level must be checked often during the bleeding operation and replenished with fresh brake fluid as necessary. If the fluid in the reservoir runs completely out any time during bleeding, the bleeding operation must be done over again from the beginning since air will have entered the line.*

○*Tap the brake hose lightly from the caliper to the reservoir for more complete bleeding.*

○*Front Brake: First bleeding the right caliper then repeat the above steps for the left caliper.*

- Remove the clear plastic hose.
- Install:

  Diaphragm
  Diaphragm Plate
  Front Brake Reservoir Cap
- Tighten:

Torque - Front Brake Reservoir Cap Screws: 1.5 N·m (0.15 kgf·m, 13 in·lb)

Brake Fluid

- Follow the procedure below to install the rear brake fluid reservoir cap correctly.

○First, tighten the brake reservoir cap [A] clockwise [B] by hand until slight resistance is felt indicating that the cap is seated on the reservoir body [C], then tighten the cap an additional 1/6 turn [D] while holding the brake fluid reservoir body.

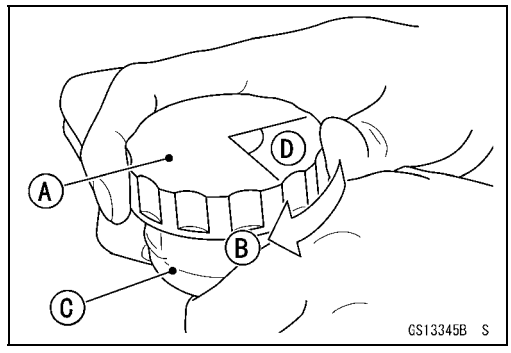

- Install the clamp and screw.
- Tighten the bleed valve, and install the rubber cap.

Torque - Bleed Valves: 5.4 N·m (0.55 kgf·m, 48 in·lb)

- Check the fluid level (see Brake Fluid Level Inspection in the Periodic Maintenance chapter).
- After bleeding is done, check the brake for good braking power, no brake drag, and no fluid leakage.

⚠ WARNING

When working with the disc brake, observe the precautions listed below.

- **Never reuse old brake fluid.**
- **Do not use fluid from a container that has been left unsealed or that has been open for a long time.**
- **Do not mix two types and brands of fluid for use in the brake. This lowers the brake fluid boiling point and could cause the brake to be ineffective. It may also cause the rubber brake parts to deteriorate.**
- **Do not leave the reservoir cap off for any length of time to avoid moisture contamination of the fluid.**
- **Do not change the fluid in the rain or when a strong wind is blowing.**
- **Except for the disc pads and disc, use only disc brake fluid, isopropyl alcohol, or ethyl alcohol for cleaning of the brake parts. Do not use any other fluid for cleaning these parts. Gasoline, engine oil, or any other petroleum distillate will cause deterioration of the rubber parts. Oil spilled on any part will be difficult to wash off completely and will eventually deteriorate the rubber used in the disc brake.**
- **When handling the disc pads or disc, be careful that no disc brake fluid or any oil gets on them. Clean off any fluid or oil that inadvertently gets on the pads or disc with a high flash-point solvent. Do not use one which will leave an oily residue. Replace the pads with new ones if they cannot be cleaned satisfactorily.**
- **Brake fluid quickly damages painted surfaces; any spilled fluid should be completely wiped up immediately.**
- **If any of the brake line fittings or the bleed valve is opened at any time, the AIR MUST BE BLED FROM THE BRAKE LINE.**

Brake Hose

Brake Hose and Pipe Removal/Installation

- Refer to the Brake Hose and Pipe Replacement in the Periodic Maintenance chapter.

Brake Hose and Pipe Inspection

- Refer to the Brake Hose and Pipe Damage and Installation Condition Inspection in the Periodic Maintenance chapter.

Anti-Lock Brake System (Equipped Models)

Parts Location

Front Wheel Rotation Sensor [A]
Front Wheel Rotation Sensor Rotor [B]

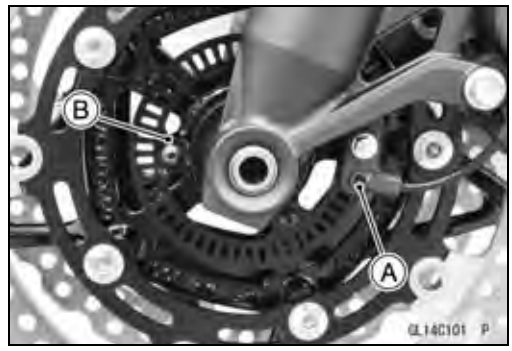

Rear Wheel Rotation Sensor [A]
Rear Wheel Rotation Sensor Rotor [B]

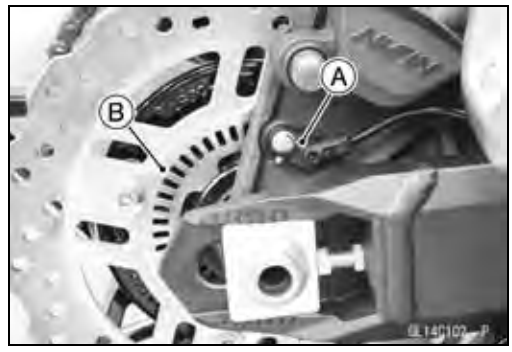

Yellow ABS Indicator Light (LED) [A]

ABS Hydraulic Unit [A]

Fuse Box (2) [A]
ABS Kawasaki Diagnosis System Connector [B]
ABS Self-diagnosis Terminal [C]

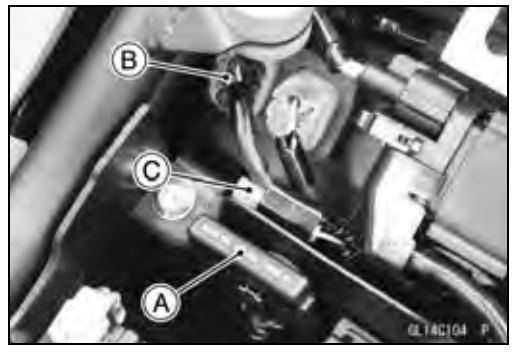

Anti-Lock Brake System (Equipped Models)

ABS System Wiring Diagram

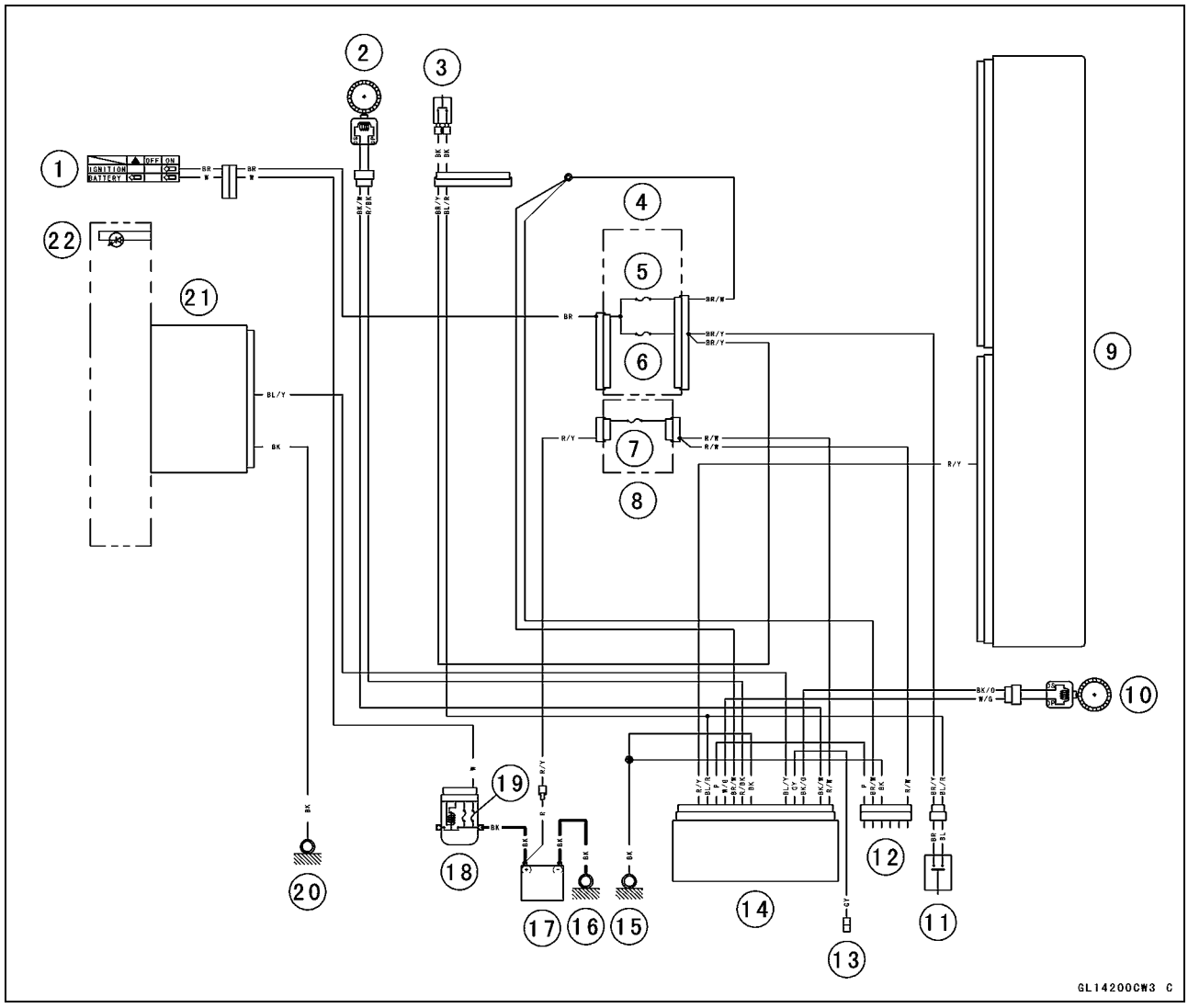

1. Ignition Switch
2. Front Wheel Rotation Sensor
3. Front Brake Light Switch
4. Fuse Box (1)
5. Ignition Fuse 15 A
6. Brake Light/Hone Fuse 7.5 A
7. ABS Fuse 30 A
8. Fuse Box (2)
9. ECU
10. Rear Wheel Rotation Sensor
11. Rear Brake Light Switch
12. ABS Kawasaki Self-diagnosis System Connector
13. ABS Self-diagnosis Terminal
14. ABS Hydraulic Unit
15. Frame Ground (4)
16. Engine Ground
17. Battery 12 V 8 Ah
18. Starter Relay
19. Main Fuse 30 A
20. Frame Ground (10)
21. Meter Unit
22. Yellow ABS Indicator Light (LED)

○Color Codes:

BK: Black	GY: Gray	PU: Purple
BL: Blue	LB: Light Blue	R: Red
BR: Brown	LG: Light Green	V: Violet
CH: Chocolate	O: Orange	W: White
DG: Dark Green	P: Pink	Y: Yellow
G: Green		

Anti-Lock Brake System (Equipped Models)

ABS Hydraulic Unit Terminal Names

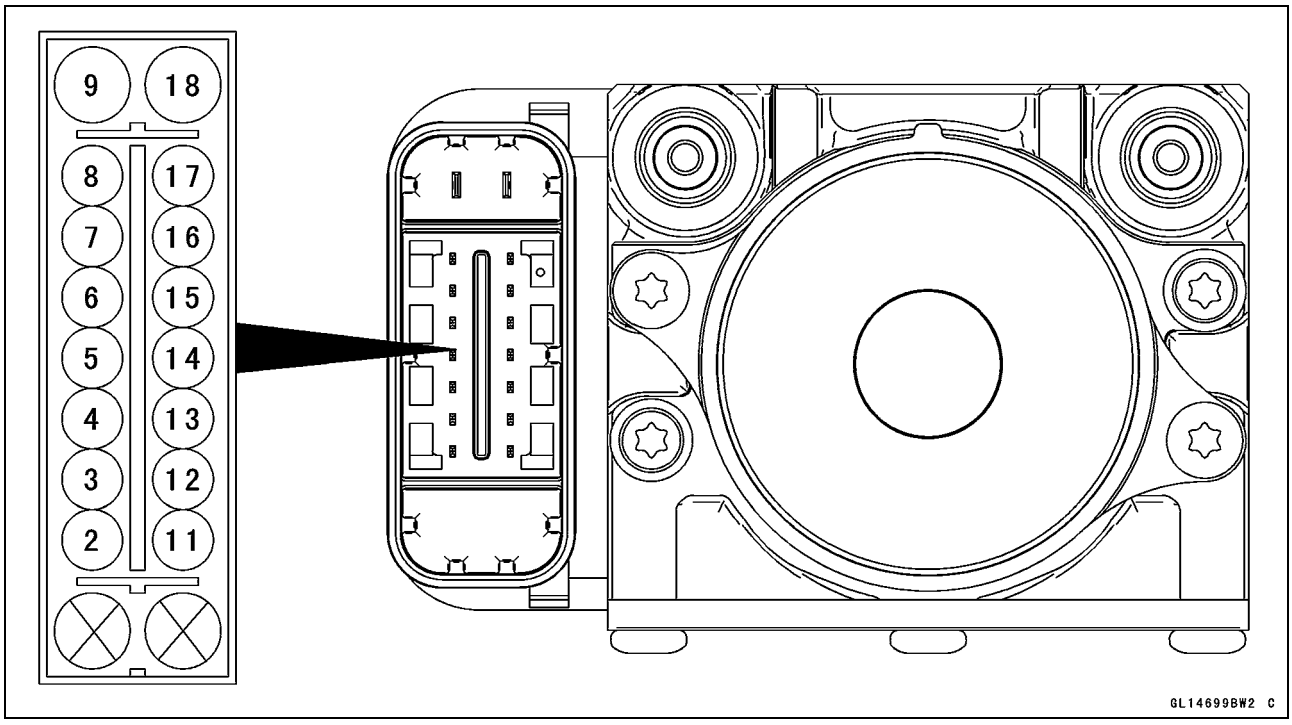

2. Unused
3. Rear Wheel Rotation Sensor Signal Output: R/Y
4. Front and Rear Brake Light Switch Signal: BL/R
5. ABS Kawasaki Self-diagnosis System Terminal: P
6. Power Supply to Rear Wheel Rotation Sensor: W/G
7. Power Supply: BR/W
8. Power Supply to Front Wheel Rotation Sensor: R/BK
9. Ground: BK
11. Unused
12. Unused
13. Yellow ABS Indicator Light (LED): BL/Y
14. ABS Self-diagnosis Terminal: GY
15. Rear Wheel Rotation Sensor Signal Input: BK/O
16. Unused
17. Front Wheel Rotation Sensor Signal Input: BK/W
18. Power Supply to ABS Motor Relay: R/W

Anti-Lock Brake System (Equipped Models)

ABS Servicing Precautions

There are a number of important precautions that should be followed servicing the ABS.

- This ABS is designed to be used with a 12 V sealed battery as its power source. Do not use any other battery except for a 12 V sealed battery as a power source.
- Do not reverse the battery cable connections. This will damage the ABS hydraulic unit.
- To prevent damage to the ABS parts, do not disconnect the battery cables or any other electrical connections when the ignition switch is on or while the engine is running.
- Take care not to short the leads that are directly connected to the battery positive (+) terminal to the chassis ground.
- Do not turn the ignition switch on while any of the ABS electrical connectors are disconnected. The ABS hydraulic unit memorizes service codes.
- Do not spray water on the electrical parts, ABS parts, connectors, leads and wiring.
- If a transceiver is installed on the motorcycle, make sure that the operation of the ABS is not influenced by electric wave radiated from the antenna. Locate the antenna as far as possible away from the ABS hydraulic unit.
- Whenever the ABS electrical connections are to be disconnected, first turn off the ignition switch.
- The ABS parts should never be struck sharply, as with a hammer, or allowed to fall on a hard surface. Such a shock to the parts can damage them.
- The ABS parts cannot be disassembled. Even if a fault is found, do not try to disassemble and repair the ABS parts, replace it.
- The ABS has many brake lines, pipes, and leads. And the ABS cannot detect problems with the conventional braking system (brake disc wear, unevenly worn brake pad, and other mechanical faults). To prevent trouble, check the brake lines and pipes for correct routing and connection, the wiring for correct routing, and the brakes for proper braking power. Be sure to check for fluid leakage, and bleed the brake line thoroughly.

⚠ WARNING

Air in the brake lines diminish braking performance and can cause an accident resulting in injury or death. If any of the brake line fittings, including the ABS hydraulic unit joint bolts, or the bleed valve is opened at any time, the air must be bled completely from the brake line. If the brake lever has a soft or "spongy" feeling mushy when it is applied, there might be air in the brake lines or the brake may be defective. Do not operate the vehicle and service the brake system immediately.

NOTICE

Do not ride the motorcycle with air in the brake line, or the ABS could malfunction.

Anti-Lock Brake System (Equipped Models)

○The yellow ABS indicator light (LED) [A] may light if the tire pressure is incorrect, a non-recommended tire is installed, or the wheel is deformed. If the indicator light lights, remedy the problem and clear the service code.

⚠ WARNING

Use of non-recommended tires may cause malfunctioning of ABS and can lead to extended braking distance resulting in an accident causing serious injury or death. Always use recommended standard tires for this motorcycle.

○The yellow ABS indicator light (LED) may come on if the engine is run with the motorcycle on its stand and the transmission in gear. If the indicator light comes on, just turn the ignition switch off, then clear service code 42, which indicates a “Faulty front wheel rotation sensor.”

○When the ABS operates, the ABS makes noise and the rider feels the reaction force on the brake lever and brake pedal. This is a normal condition. It informs the rider that the ABS is operating normally.

○Service codes detected once by the ABS hydraulic unit will be memorized in the ABS hydraulic unit. Therefore, after maintenance work is finished, be sure to erase the service codes. Do not erase the service codes during troubleshooting. Wait until all the checks and repair work are finished to prevent duplication of previous service codes and unnecessary maintenance work.

○Before delivering the motorcycle to the customer, be sure to erase any service codes which might be stored in the ABS hydraulic unit. Using the self-diagnosis feature, make sure that the yellow ABS indicator light (LED) lights. A fully charged battery is a must for conducting reliable self-diagnosis. Test run the motorcycle at a speed of more than 30 km/h (19 mph) to see that the yellow ABS indicator light (LED) does not come on. Finally, test run the motorcycle at a speed of more than 30 km/h (19 mph) and brake suddenly to see that the motorcycle stops without loss of steering control and the ABS operates normally (The reaction force generated is felt in the brake lever and pedal.). This completes the final inspection.

Anti-Lock Brake System (Equipped Models)

ABS Troubleshooting Outline

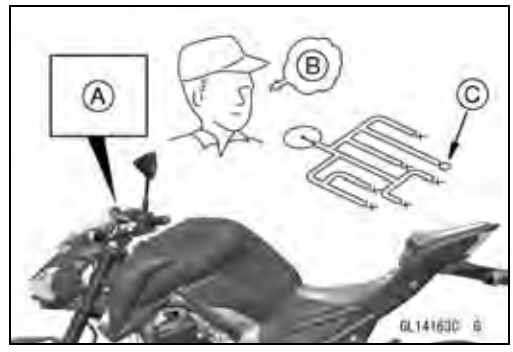

When an abnormality in the system occurs, the yellow ABS indicator light (LED) lights up to alert the rider. In addition, the nature of the fault is stored in the memory of the ABS hydraulic unit and when in the self-diagnosis mode, the service code [A] is indicated by the number of times the yellow ABS indicator light (LED) blinks. The service codes stored in memory are not erased until the mode has been changed to the fault erase mode after the fault has been corrected. Therefore, after correcting the problem, always erase the service codes and then run the self-diagnosis program to confirm normal signal output. When, due to a malfunction, the yellow ABS indicator light (LED) remains lit, get a thorough understanding of the background before starting the repair work. Ask the rider about the conditions [B] under which the problem occurred and try to determine the cause [C]. Do not rely solely on the ABS self-diagnosis function, use common sense; check the brakes for proper braking power, and brake fluid level, search for leaks, etc.

Even when the ABS is operating normally, the yellow ABS indicator light (LED) may light up under the conditions listed below. Turn the ignition switch off to stop the indicator light. If the motorcycle runs without erasing the service code, the light may light up again.

- ○After continuous riding on a rough road.
- ○When the engine is started with the stand raised and the transmission engaged, and the rear wheel turns.
- ○When accelerating so abruptly that the front wheel leaves the ground.
- ○When the ABS has been subjected to strong electrical interference.
- ○When tire pressure is abnormal. Adjust tire pressure.
- ○When a tire different in size from the standard size is being used. Replace with standard size.
- ○When the wheel is deformed. Replace the wheel.

Much of the ABS troubleshooting work consists of confirming continuity of the wiring. The ABS parts are assembled and adjusted by the manufacturer, so there is no need to disassemble or repair them. Replace the ABS hydraulic unit.

The basic troubleshooting procedures are listed below.

- ● Carry out pre-diagnosis inspections as a preliminary inspection.
- ● Determine the fault using the self-diagnosis function.
- ● Check wiring and connections from the ABS hydraulic unit connector to the suspected faulty ABS part, using a digital meter.

Anti-Lock Brake System (Equipped Models)

● Visually inspect the wiring for signs of burning or fraying.
★If any wiring is poor, replace the damaged wiring.
● Pull each connector [A] apart and inspect it for corrosion, dirt and damage.
★If the connector is corroded or dirty, clean it carefully. If it is damaged, replace it.
● Check the wiring for continuity.
○Use the wiring diagram to find the ends of the lead which is suspected of being a problem.
○Connect the digital meter between the ends of the leads.
★If the digital meter does not read about 0 Ω, the lead is defective. Replace the main harness if necessary.

● Narrow down suspicious parts and close in on the faulty ABS part by repeating the continuity tests.
★If no abnormality is found in the wiring or connectors, the ABS parts are the next likely suspects. Check each part one by one.
★If an abnormality is found, replace the affected ABS part.

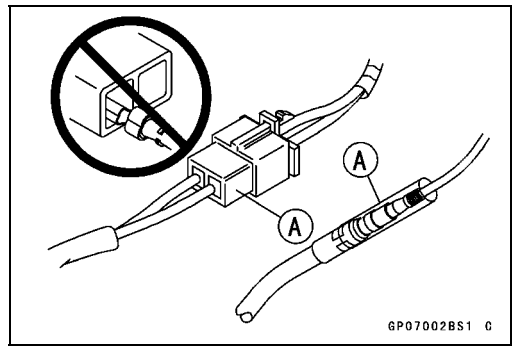

Anti-Lock Brake System (Equipped Models)

ABS Diagnosis Flow Chart

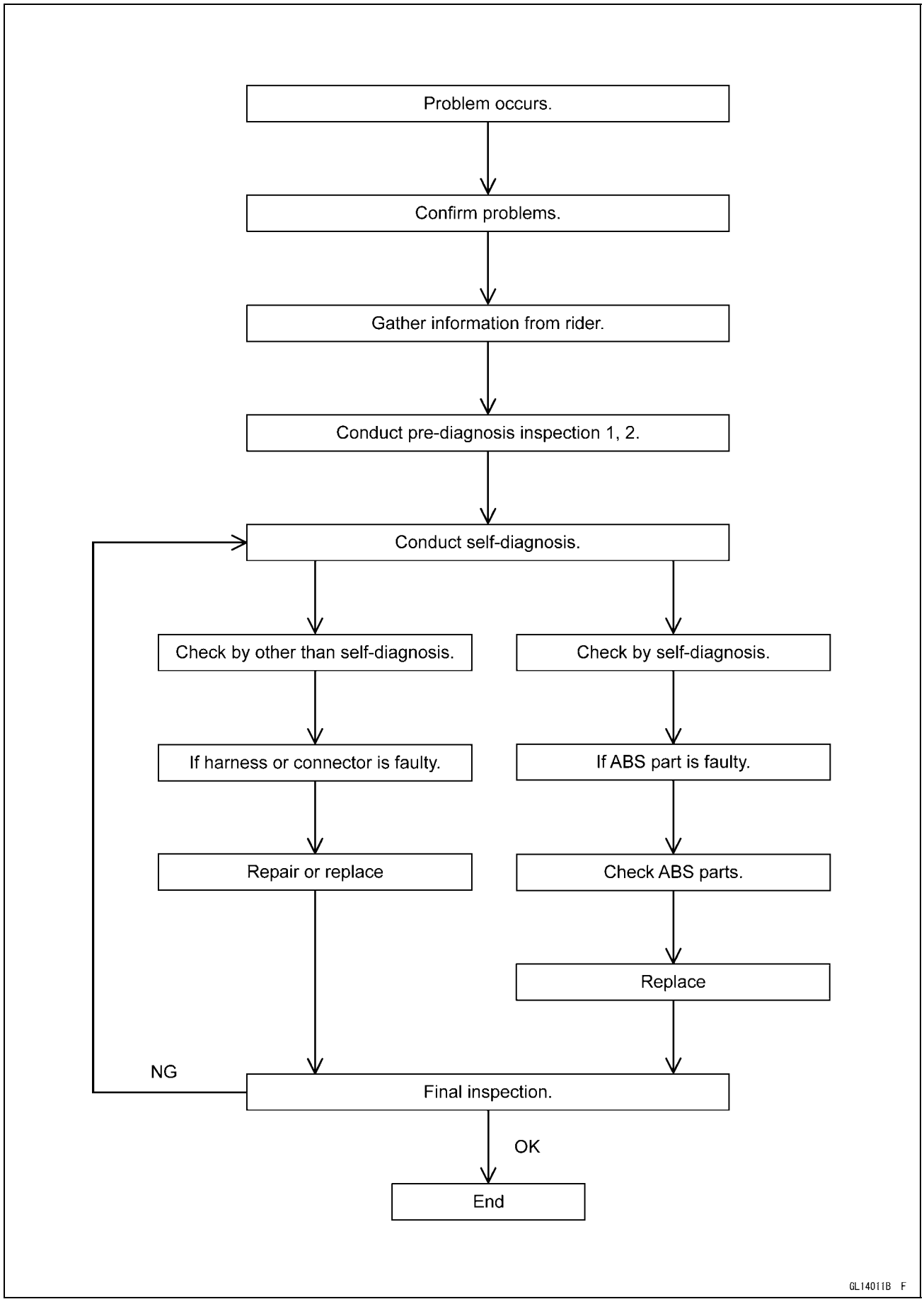

Inquiries to Rider

Inquiries to Rider

○Each rider reacts to problems in different ways, so it is important to confirm what kind of problem the rider is experiencing.
○Try to find out exactly what problem occurs under exactly what conditions by asking the rider; knowing this information may help you reproduce the problem in the workshop.
○The diagnosis sheet will help prevent you from overlooking any key information, so always use it.

Sample Diagnosis Sheet 1

Rider Name: ……..…….. Registration No. (license plate No.): ……
Date of registration: …..…….……. Model: ……
Vin No.: …..……..……..... Odometer reading: …….. km or miles
Engine No.: ..…….…… Odometer reading when problem first occured: …… km or miles

Question	Description			Answer	Advice to customer
Which statement/s best describes the fault with the ABS system?	*Yellow ABS indicator light (LED) illuminated?*	*Flashing*			A fault has been detected with the ABS system.
		Continuous			
		Not working			
	ABS not working				Further inspection by technician required.
	ABS operates too frequently				Continuous riding on rough or un-even surfaces can cause the ABS to operate more frequently.
	Stopping distance too long				
	Does the wheel lock when you apply the brakes				Further inspection by technician required.
	Brake can't be released				
	Other				
Do the front and rear brake levers feel normal during application?	*Normal*				Further inspection by technician required.
	Abnormal	*Long stroke (lever feels soft and moves back close to the handle bar)*			This indicates a probable fault with the braking system and should be inspected immediately.
		Limited stroke (lever feels hard and has little movement)			
		Pulsing/vibrating			
	Which lever? (front, rear or both)				
When does the fault occur?	*During start up / stationary*	*(Is a centre stand or service stand used)*			If the motorcycle engine is left running whilst on its centre or service stand, mechanical drag can cause the rear wheel to rotate. If the rear wheel rotates the ABS system may detect a fault. Turning off the ignition switch and restarting should reset the yellow ABS indicator light (LED) if no problems are detected. However the service code will be stored in the ABS ECU and should be reset by the dealer.
	Driving below 6 km/h (4mph) (Speeds vary depending on model)				The ABS system is not active at these speeds.
	Driving above 6 km/h (4mph) (Speeds vary depending on model)				This may be normal ABS operation if the road conditions are poor.
	When slowing or stopping (Rate of brake application)	*Gradual braking*	*front only*		
			rear only		
			both brakes		
		During abrupt braking	*front only*		Abrupt braking may cause the ABS to function early as the suspension may not have had enough time to react to the situation.
			rear only		
			both brakes		
		There is no specific pattern			
	Other				

GL14053C S

Anti-Lock Brake System (Equipped Models)

Question	Description		Answer	Advice to customer
How often does the fault occur?	*Every time ignition is switched on*			Further inspection by technician required.
	Every time the brakes are used (Continually)			
	No regularity (Intermittent)			
	Other			
During which riding conditions does the fault occur?	*Highway riding*	*Any comment on riding style maybe applicable.*		Braking and handling characteristics can vary with vehicle speed, therefore ABS operation during braking at highway speed may be more frequent.
	City riding			Accelerating abruptly between traffic signals so that the front wheel leaves the ground can trigger the ABS warning indicator. Normal riding on good condition roads should allow the yellow ABS indicator light (LED) to reset automatically.
	Minor/country roads riding			Continuous riding on rough or uneven surfaces can cause the ABS to operate more frequently.
	Cross country riding			Continuous riding on loose or off road surfaces can trigger the ABS warning indicator. Normal riding on good condition roads should allow the yellow ABS indicator light (LED) to reset automatically.
	Track/closed circuit riding			Excessive use of the ABS system due to continuous fast riding can trigger the ABS warning indicator. Normal riding on good condition roads should allow the yellow ABS indicator light (LED) to reset automatically.
	All			Further inspection by technician required.
In what road conditions does the problem occur?	*Dry*			Further inspection by technician required.
	Wet			In wet conditions it is possible that the ABS is operating normally
	Snow/Ice			In snow/icy conditions it is possible that the ABS is operating normally
	Loose/rough surface (gravel)			On loose/rough surfaces it is possible that the ABS is operating normally
Motorcycle condition	*Has the machine been regularly serviced according to the periodic maintenance schedule?*			If the service history is incomplete it is possible that a fault may become apparent. For example, failure to replace the brake fluid during periodic maintenance can cause the hydraulic unit to become internally damaged.
	Have there been any previous braking problems?			Any previous braking problems may be related to the ABS complaint. It is important that the customer provides as much information as possible so that diagnosis can be made as quickly as possible.
	Have any aftermarket parts been fitted?	*OE Tires and brakes?*		Further inspection by technician required.
	Have the daily safety checks been carried out? (tire pressures / condition etc.)			Worn tires or tires with incorrect pressures can cause an ABS fault. It is important to regularly check both tire condition and pressure.

Anti-Lock Brake System (Equipped Models)

Dealer Findings

Sample Diagnosis Sheet 2

Question/Action	Description		Answer	Advice to technician
Review customer feedback information	*Carefully analyze the information that has been collected from the customer. Use this information to help you perform your initial diagnosis.*			
Check to see if any diagnostic codes are present	*1*			If codes are present refer to service manual.
	2			
	3			
	4			
	5			
Inspect the following	*Battery voltage*			The ABS is designed to be used with a 12 V sealed battery as its power source. Only use the battery specified by the service manual as a power source. If low battery voltage is detected service codes: B52 or B53 will be displayed.
	Tires type/size		Front ..... Rear	Refer to service manual.
	Tire pressures		Front ..... Rear	
	Tire condition		Front ..... Rear	Excessive or abnormal wear can be recognized as an ABS fault.
	Wheel rotation sensor air gap		Front ..... Rear	Refer to service manual. Also check that the wheel orientation is correct.
	Wheel condition (damaged or deformed)		Front ..... Rear	Refer to service manual.
	Brake system general condition		Front ..... Rear	Pad wear/Front and rear operation/Condition of hoses etc.
	Brake disc run-out		Front ..... Rear	Refer to service manual.
Additional information on the yellow ABS indicator light (LED)	*Continuous*	*Stays on all the time while ignition on*		Check for diagnostic trouble codes.
		Turns off when first moving off but turns on again and stays on		
		Turns on when brake(s) are operated		
		Other:		
	Not working	*Turns off soon after moving off*		Test the operation of the light by turning on the ignition. If the light fails to illuminate ensure that the bike is equipped with ABS before inspecting the meter panel for faults as per the service manual.
		Turns off after riding for a while		
		Other:		
	How many times does it flash per 10 seconds?		5, 15, or 20	By flashing the ABS unit is indicating additional fault codes that may not be listed in the service manual. Please carefully count the number of flashes per 10 seconds before contacting Kawasaki. *(Kawasaki may request a video of the flashing sequence)*
			Other: ..... times	

Anti-Lock Brake System (Equipped Models)

Pre-Diagnosis Inspection 1

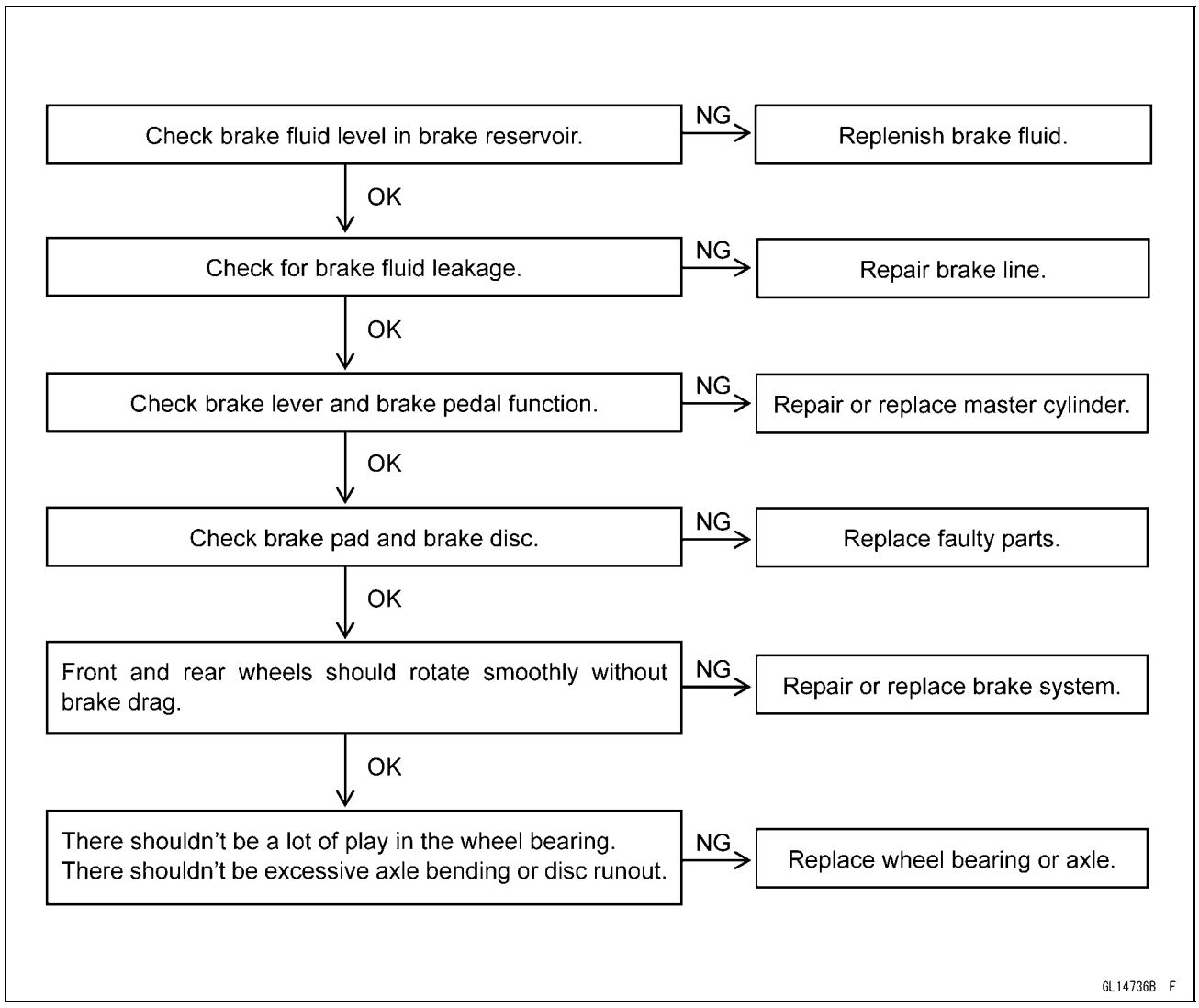

Anti-Lock Brake System (Equipped Models)

Pre-Diagnosis Inspection 2

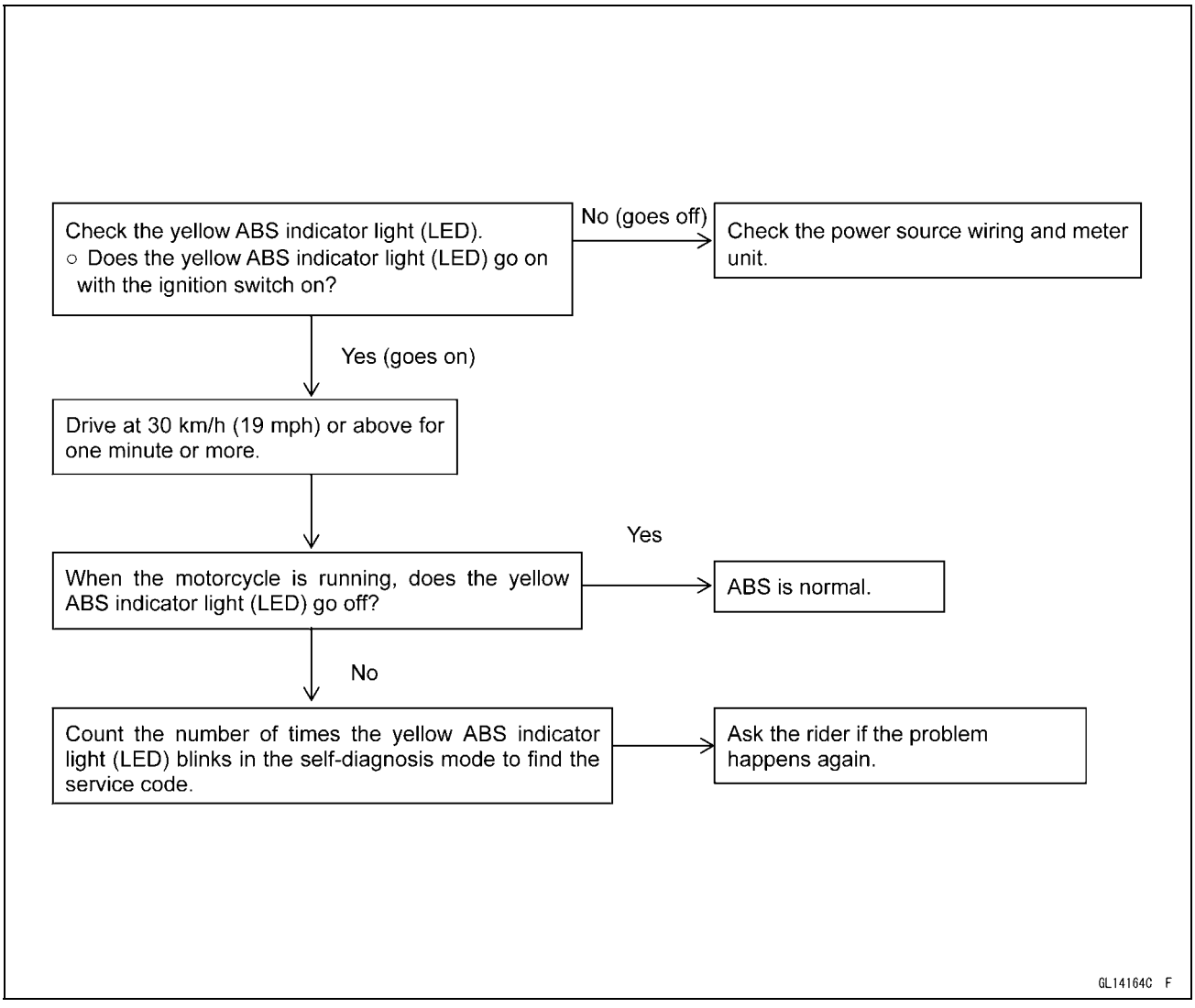

Self-diagnosis Outline

When the yellow ABS indicator light (LED) has blinked or goes on, the ABS hydraulic unit memorizes and stores the service code for the service person to troubleshoot easily. The service code memory is powered directly by the battery and cannot be canceled by the ignition switch.

The ABS hydraulic unit can memorize up to all service codes. Further service codes are memorized after erasing the preceding all service codes. If there is no fault, the yellow ABS indicator light (LED) lights, indicating that “The ABS is normal.”

Self-diagnosis Procedures

○Before performing the self-diagnosis procedures, make sure that the yellow ABS indicator light (LED) [A] stays on to indicate any electrical problem occurring in the ABS.

NOTE

○*Use a fully charged battery for performing self-diagnosis procedure properly. A insufficient battery may cause improperly result.*

○*The self-diagnosis procedures should be done with the motorcycle is stopped.*

Anti-Lock Brake System (Equipped Models)

- The ABS hydraulic unit can be store the service codes including previous ones.
- To read out the current service code, erase the stored service codes once prior reading the service code (see Service Code Clearing Procedures).
- Test ride the motorcycle with 30 km/h (19 mph) or more in a safety area to store the service code, which correspond to the current problems.

- Remove the front seat (see Front Seat Removal in the Frame chapter).
- Ground the self-diagnosis terminal [A] (Gray) to a frame ground, using a suitable auxiliary lead. Keep the auxiliary lead ground during self-diagnosis procedure.
- Turn the ignition switch on and read the service code (see How to Read Service Code).
- To exit the self-diagnosis mode, remove the auxiliary lead from the self-diagnosis terminal.

NOTE

○*The grounding auxiliary lead must be removed after the self-diagnosis procedure.*

Service Code Clearing Procedures

- Start the service code erase mode with the following procedure.

○The erase mode starts when the ABS self-diagnosis terminal is disconnected from the frame ground after starting the self-diagnosis mode.

○The service code can be erased by grounding (time for at least one second) and ungrounding the ABS self-diagnosis terminal three times or more within about 12.5 seconds after starting the erase mode and grounding it.

○The yellow ABS indicator light (LED) remains lit during the erase mode.

○After erasing, the yellow ABS indicator light (LED) blinks two times and lights.

○Once erasing is finished, enter the self-diagnosis mode again to confirm that the service codes have been erased. If the ABS has been reset and all codes have been erased, the yellow ABS indicator light (LED) lights.

Anti-Lock Brake System (Equipped Models)

Erasing of Service Code

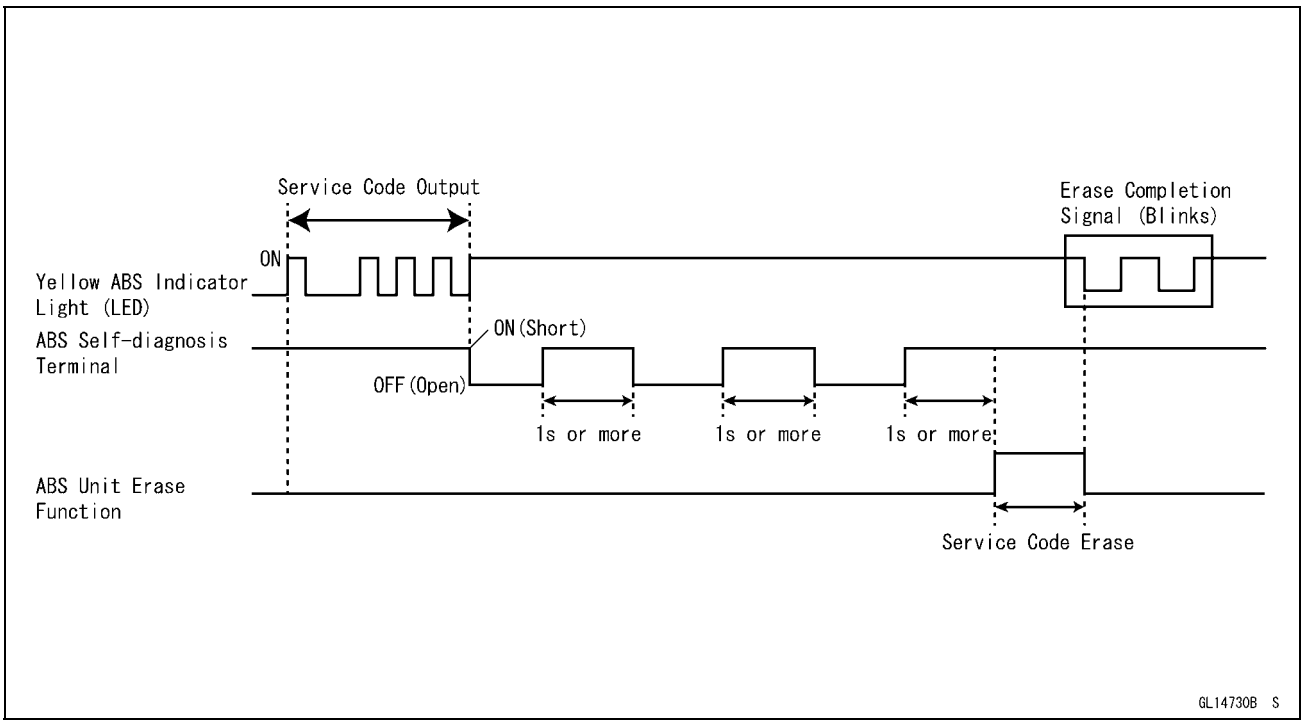

Anti-Lock Brake System (Equipped Models)

Self-diagnosis Flow Chart

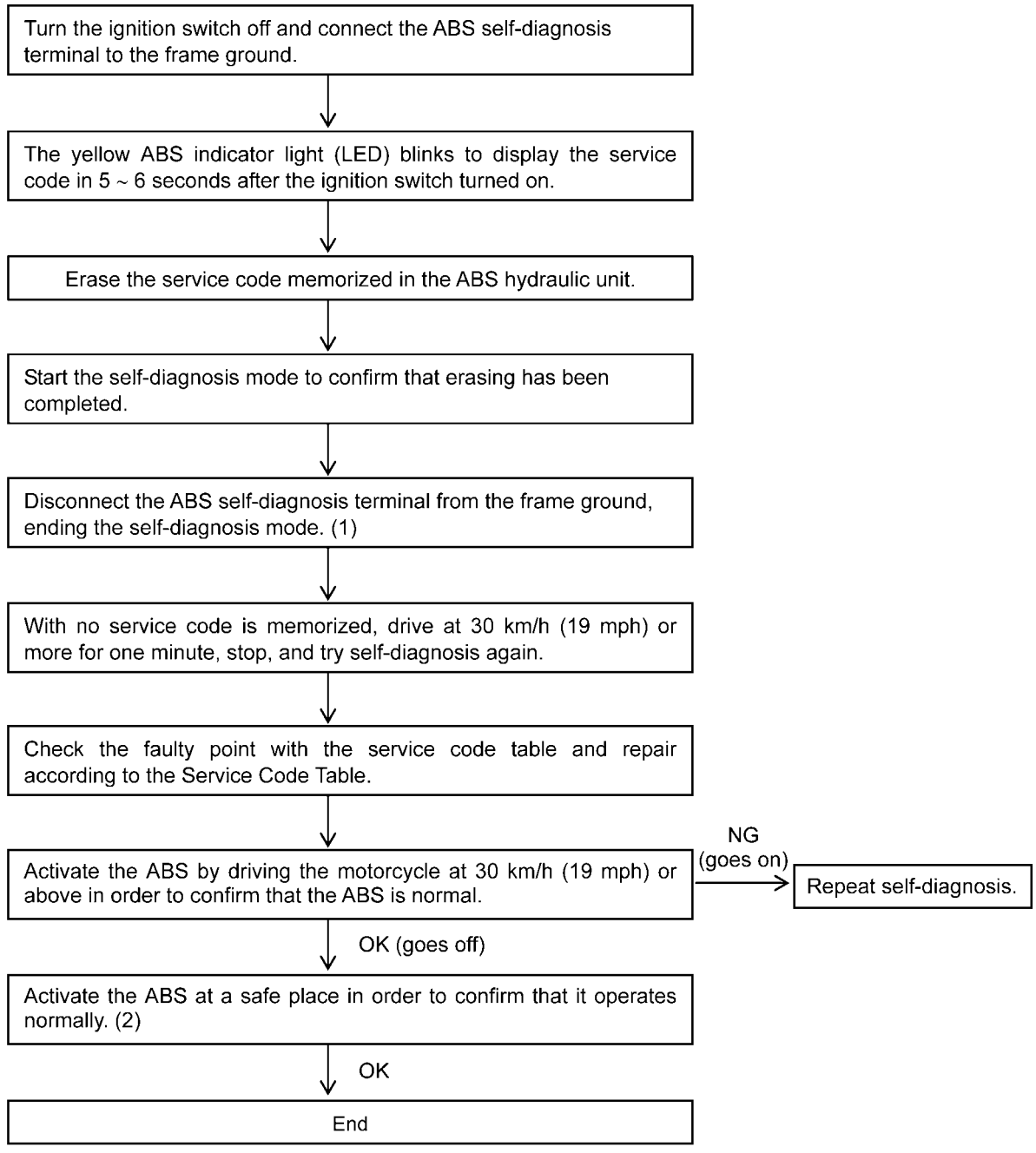

(1): The self-diagnosis mode ends following.
When the ignition switch is OFF.
When the motorcycle is driven while in the self-diagnosis mode.
When the self-diagnosis terminal disconnects.

(2): Apply brake suddenly at 30 km/h (19 mph) or more to confirm that the motorcycle stops smoothly and steady with pulsation on the brake lever and pedal.

GL14165C F

Anti-Lock Brake System (Equipped Models)

How to Read Service Codes

○Service codes are shown by a series of long and short blinks of the yellow ABS indicator light (LED) as shown below.
○Read 10th digit and unit digit as the yellow ABS indicator light (LED) blinks.
○When there are a number of faults, a maximum of all service codes can be stored.
○For the display pattern, the display will begin starting from the small number code entered, then the display is repeated from the smallest number code once again.

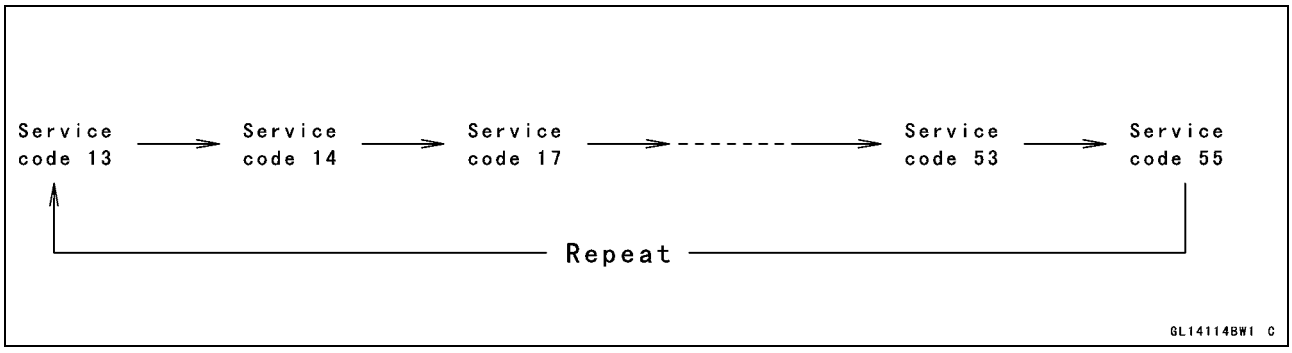

○If there is no fault, the yellow ABS indicator light (LED) lights as shown.

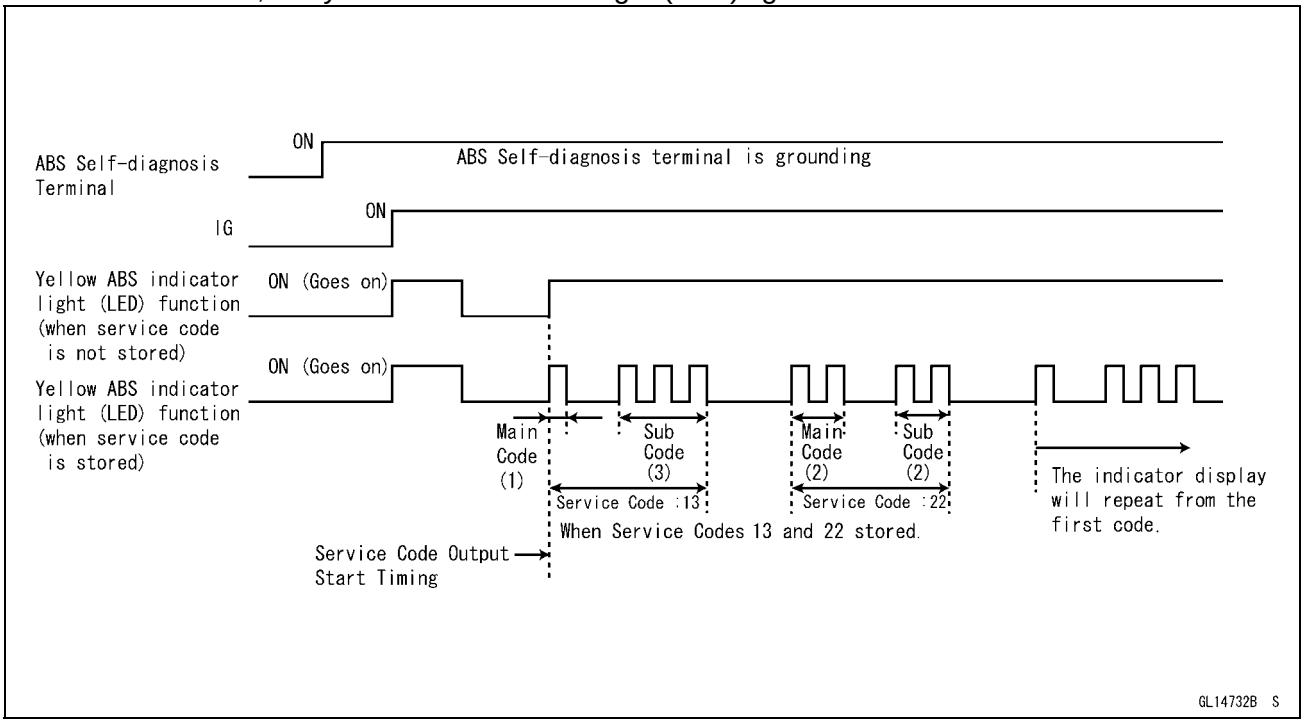

How to Erase Service Codes

○Even if the ignition switch is turned off, the battery or the ABS hydraulic unit are disconnected, all service codes remain in the ABS hydraulic unit.
○Refer to the Service Code Clearing Procedure for the service code erasure.

Anti-Lock Brake System (Equipped Models)

Service Code Table

Service Code	Yellow ABS Indicator Light (LED)	Problems	Light State
–	Stays on* (Error function after the ignition switch turned on)	Main harness, meter unit, wheel rotation sensor(s) or ABS hydraulic unit abnormal	ON
–	Does not go on (When the ignition switch turned on)	Main harness, meter unit or ABS hydraulic unit abnormal	OFF
13	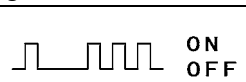	Rear intake solenoid valve trouble (wiring shorted or open)	ON
14	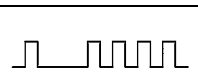	Rear outlet solenoid valve trouble (wiring shorted or open)	ON
17	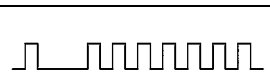	Front intake solenoid valve trouble (wiring shorted or open)	ON
18		Front outlet solenoid valve trouble (wiring shorted or open)	ON
19		ABS solenoid valve relay trouble [stuck relay (ON or OFF)]	ON
25		Front, rear wheel rotation difference abnormal (substandard tire)	ON
35	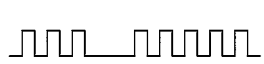	ABS motor trouble (mechanical stuck)	ON
42		Front wheel rotation sensor signal abnormal (sensor or rotor missing, too large clearance, rotor tooth worn or missing)	ON
43	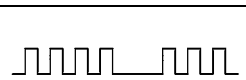	Front or rear wheel rotation sensor wiring (wiring shorted or open, connector bad connection)	ON
44		Rear wheel rotation sensor signal abnormal (sensor or rotor missing, too large clearance, rotor tooth worn or missing)	ON
45		Rear wheel rotation sensor wiring (wiring shorted or open, connector bad connection)	ON
52		Power supply voltage abnormal (low-voltage)	ON
53		Power supply voltage abnormal (high-voltage)	ON
55		ABS Hydraulic Unit Internal Error (ECU operation abnormal)	ON

*: In spite of the service code is not stored, the yellow ABS Indicator Light (LED) does not go off when the 2 seconds later from the ignition switch turned on.

Anti-Lock Brake System (Equipped Models)

Yellow ABS Indicator Light (LED) Inspection

○In this model, the yellow ABS indicator light (LED) [A] goes on or blinks by the control of the ABS hydraulic unit.

Yellow ABS Indicator Light (LED) Stays ON (Error function after the ignition switch turned on - No Service Code)

● Perform the Pre-Diagnosis Inspection 1.
● Check the system connectors for loose or poorly contact.

Step 1

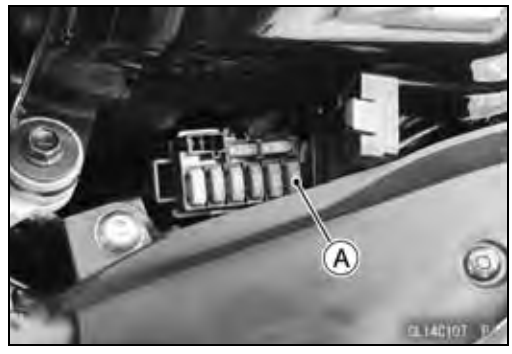

● Check the ignition fuse 15 A [A] in the fuse box (1) for blown.
★If the fuse is blown, replace the fuse.
★If the fuse is not blown, go to next step.

Step 2

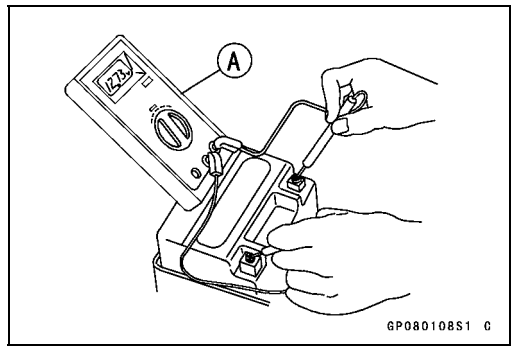

● Measure the battery terminal voltage using a voltmeter [A].
○The battery voltage should be within 10 ~ 16 V.
★If the voltage without specifications, recharge or replace the battery.
★If the voltage within specifications, go to next step.

Step 3

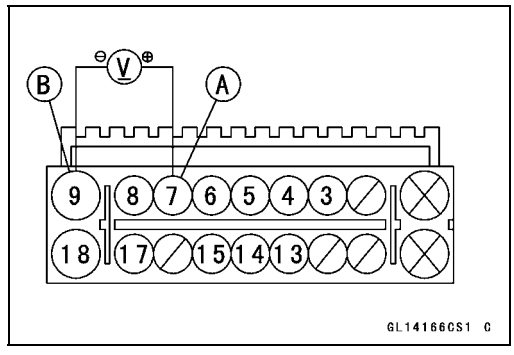

● Disconnect the ABS hydraulic unit connector.
● Check the voltage between the terminal 7 (BR/W) (+) [A] and terminal 9 (BK) (–) [B] of the ABS hydraulic unit connector.
○The battery voltage (10 ~ 16 V) should be appeared while the ignition switch turned on.
★If the battery voltage appeared, go to step 4.
★If the battery voltage does not appear, go to next step.

Step 3-1

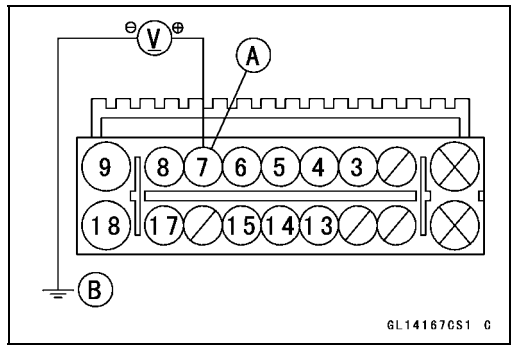

● Check the voltage between the terminal 7 (BR/W) (+) [A] of the ABS hydraulic unit connector and a frame ground (–) [B].
○The battery voltage (10 ~ 16 V) should be appeared while the ignition switch turned on.
★If the battery voltage does not appear, repair or replace the main harness.
★If the battery voltage appeared, go to next step.

Anti-Lock Brake System (Equipped Models)

Step 3-2
- Check for continuity between the terminal 9 (BK) [A] of the ABS hydraulic unit connector and a frame ground [B].

★If there is no continuity, repair or replace the main harness.
★If there is continuity, replace the ABS hydraulic unit.

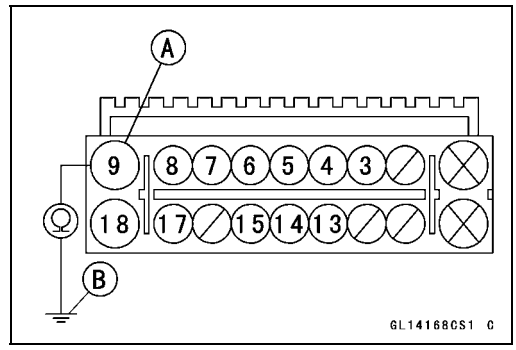

Step 4
- With the self-diagnosis terminal connected to the ground, check for continuity between the terminal 9 (BK) [A] and terminal 14 (GY) [B] of the ABS hydraulic unit connector.

★If there is no continuity, repair or replace the main harness.
★If there is continuity, go to next step.

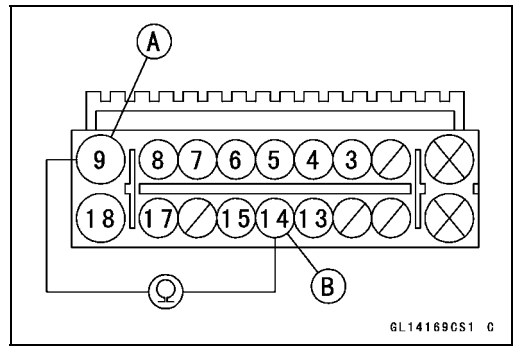

Step 5
- Jump the terminal 9 (BK) [A] and terminal 13 (BL/Y) [B] at the ABS hydraulic unit connector using a jumper read [C].
- Check the yellow ABS indicator light (LED) with the ignition switch turned on.

★If the indicator light (LED) goes off, replace the ABS hydraulic unit.
★If the indicator light (LED) goes on, go to next step.

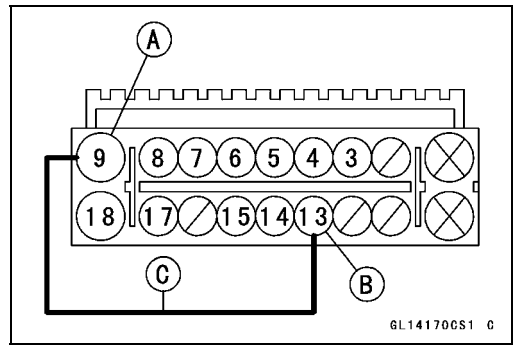

Step 6
- Disconnect the connector from the meter unit (see Meter Unit Removal/Installation in the Electrical System chapter).
- Check for continuity between the terminal 13 (BL/Y) [A] of the ABS hydraulic unit connector [B] and terminal 8 (BL/Y) [C] of the meter connector [D].

★If there is no continuity, repair or replace the main harness.
★If there is continuity, replace the meter unit with a new one.

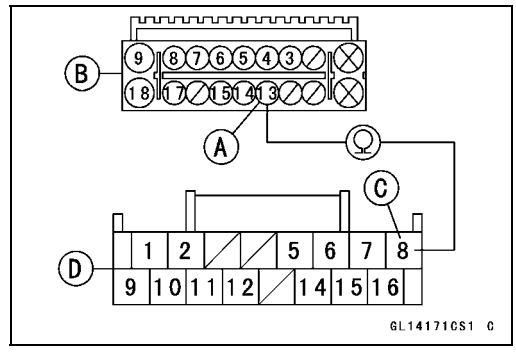

Yellow ABS Indicator Light (LED) does not go on (When the ignition switch turned on)
- Perform the Pre-Diagnosis Inspection 1.
- Check the system connectors for loose or poorly contact.

Step 1
- Check the meter fuse 7.5 A in the fuse box (1) for blown.

★If the fuse is blown, replace the fuse.
★If the fuse is not blown, go to next step.

Anti-Lock Brake System (Equipped Models)

Step 2

- Disconnect the ABS hydraulic unit connector [A] and check the yellow ABS indicator light (LED) for function.

○The yellow ABS indicator light (LED) should goes on when the ignition switch turned on.

★If the indicator does not goes on, go to next step.

★If the indicator goes on, go to step 3.

Step 2-1

- Disconnect the connector from the meter unit (see Meter Unit Removal/Installation in the Electrical System chapter).
- Check for continuity between the terminal 13 (BL/Y) [A] of the ABS hydraulic unit connector and a frame ground [B].

★If there is continuity, repair or replace the main harness.

★If there is no continuity, replace the meter unit with a new one.

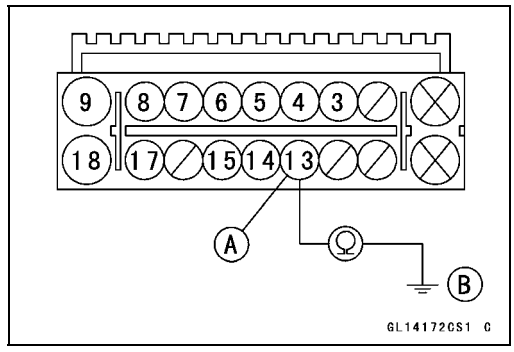

Step 3

- Check the voltage between the terminal 9 (BK) (–) [A] and terminal 7 (BR/W) (+) [B] of the ABS hydraulic unit connector.

○The battery voltage (10 ~ 16 V) should not appear while the ignition switch turned off.

★If the battery voltage appeared, repair or replace the main harness.

★If the battery voltage does not appear, go to next step.

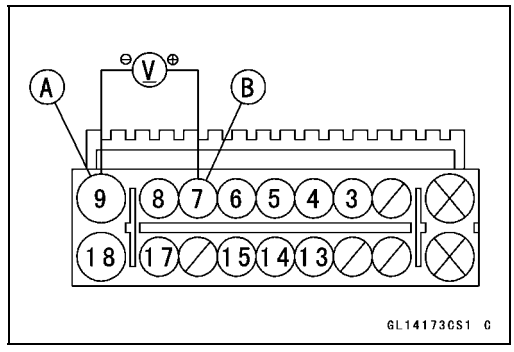

Step 4

- Check the voltage between the terminal 9 (BK) (–) [A] and terminal 8 (R/BK) (+) [B] of the ABS hydraulic unit connector.

○The battery voltage (10 ~ 16 V) should not appear while the ignition switch turned off.

★If the battery voltage appeared, repair or replace the main harness.

★If the battery voltage does not appear, go to next step.

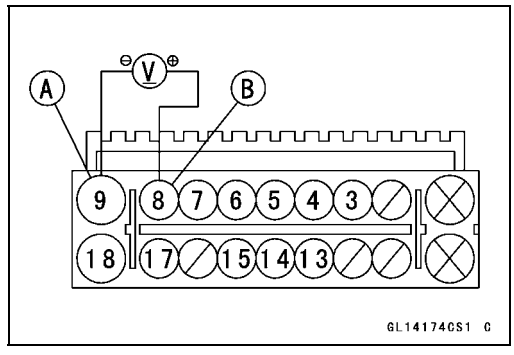

Step 5

- Check the voltage between the terminal 9 (BK) (–) [A] and terminal 6 (W/G) (+) [B] of the ABS hydraulic unit connector.

○The battery voltage (10 ~ 16 V) should not appear while the ignition switch turned off.

★If the battery voltage appeared, repair or replace the main harness.

★If the battery voltage does not appear, replace the ABS hydraulic unit.

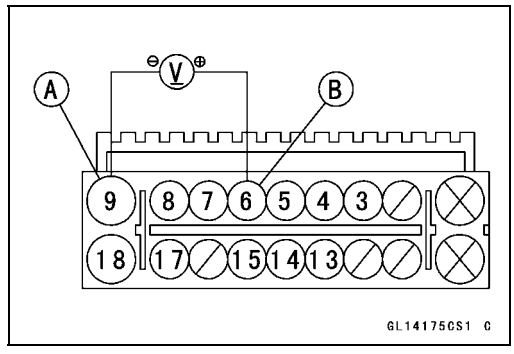

Anti-Lock Brake System (Equipped Models)

ABS Unit Solenoid Valve Inspection (Service Code 13, 14, 17, 18)

○These codes indicate there is a problem in the solenoid valves, which integrated into the ABS hydraulic unit. Therefore the solenoid valves cannot be checked directly.
● Check the system connectors for loose or poorly contact.
● In order to confirm a existing problem in the system, erase the service code and then perform the pre-diagnosis inspection 1 and 2.
★If same service code is indicated again, faulty solenoid valve in the ABS hydraulic unit. Replace the ABS hydraulic unit.
★If the service code does not indicate, ABS system is normal (service code is not stored; temporary failure).

ABS Solenoid Valve Relay Inspection (Service Code 19)

● Perform the Pre-Diagnosis Inspection 1 and 2.
● Check the system connectors for loose or poorly contact.

Step 1

● Check the ABS fuse 30 A [A] in the fuse box (2) for blown.
★If the ABS fuse is blown, replace the fuse.
★If the fuse is not blown, go to next step.

Step 2

● Disconnect the ABS hydraulic unit connector.
● Check the voltage between the terminal 9 (BK) (–) [A] and terminal 18 (R/W) (+) [B] of the ABS hydraulic unit connector.
○The battery voltage (10 ~ 16 V) should appear while the ignition switch turned on.
★If the battery voltage does not appear, repair or replace the main harness.
★If the battery voltage appeared, replace the ABS hydraulic unit.

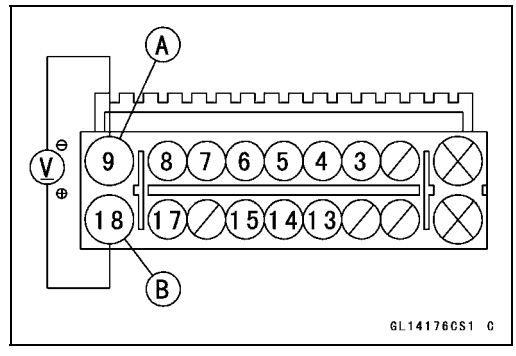

Front, Rear Wheel Rotation Difference Abnormal Inspection (Service Code 25)

● Perform the Pre-Diagnosis Inspection 1 and 2.

Step 1

● Check the front and rear tire/wheel conditions for tire pressure, tire size/types, abnormal wear and deformations (see Wheels/Tires in the Periodic Maintenance chapter).
★If the tire and/or wheel are in bad condition, correct them to the normal condition.
★If there is no problem, go to next step.

Step 2

● Visually inspect the sensor rotor [A] for missing teeth or clogging with foreign matter (see Wheel Rotation Sensor Rotor Inspection).
★Clean or correct the parts if necessary.
★If the all parts correct, go to next step.

Anti-Lock Brake System (Equipped Models)

Step 3
- Measure the front and rear wheel rotation sensor air gaps (see Wheel Rotation Sensor Air Gap Inspection).

★If the air gap is not within the specification, recheck the hub bearing, sensor, sensor rotor and sensor installation condition.

★If the air gap is within the specification, replace the ABS hydraulic unit.

ABS Motor Inspection (Service Code 35)
- Perform the Pre-Diagnosis Inspection 1 and 2.
- Check the system connectors for loose or poorly contact.
- In order to confirm a existing problem in the system, erase the service code and then recheck the yellow ABS indicator light (LED).

★If same service code is indicated again, faulty ABS motor in the ABS hydraulic unit. Replace the ABS hydraulic unit.

★If the service code does not indicate, ABS system is normal (service code is not stored; temporary failure).

Wheel Rotation Sensor Signal Abnormal Inspection (Front: Service Code 42) (Rear: Service Code 44)
- Perform the Pre-Diagnosis Inspection 1 and 2.
- Check the system connectors for loose or poorly contact.

Step 1
- Measure the front or rear wheel rotation sensor air gap (see Wheel Rotation Sensor Air Gap Inspection).

★If the air gap is not within the specification, recheck the hub bearing, sensor, sensor rotor and sensor installation condition.

★If the air gap is within the specification, go to next step.

Step 2
- Check that there is iron or other magnetic deposits between the front or rear wheel rotation sensor [A] and sensor rotor [B], and the sensor rotor slots for obstructions.
- Check the installation condition of the sensor for looseness.
- Check the sensor tip and sensor rotor slots for deformation or damage (e.g. chipped sensor rotor teeth).

★If the sensor and sensor rotor in bad condition, clean or replace the faulty parts.

★If all items are correct, go to next step.

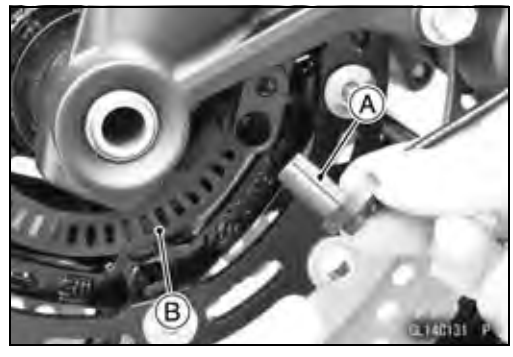

Step 3
- Check the front and rear tire/wheel conditions for tire pressure, tire size/types, abnormal wear and deformations (see Wheels/Tires in the Periodic Maintenance chapter).

★If the tire and/or wheel are in bad condition, correct them if necessary and recheck.

★If all items are good condition, replace the ABS hydraulic unit.

Anti-Lock Brake System (Equipped Models)

Front or Rear Wheel Rotation Sensor Wiring Inspection (Service Code 43)

○This code is indicates there is a trouble in the front or rear wheel rotation sensor.
● Perform the Pre-Diagnosis Inspection 1 and 2.
● Check the system connectors for loose or poorly contact.

Step 1
● Disconnect the ABS hydraulic unit connector.
● Check for continuity between the terminal 9 (BK) [A] and terminal 8 (R/BK) [B] of the ABS hydraulic unit connector.
★If there is continuity, go to next step.
★If there is no continuity, go to step 2.

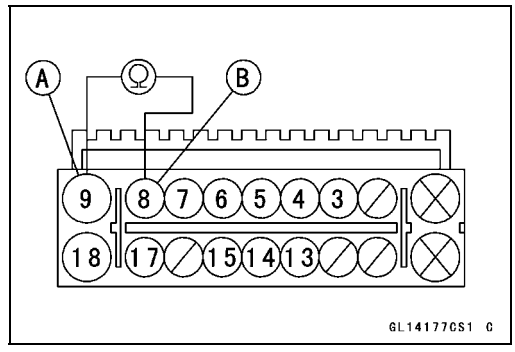

Step 1-1
● Disconnect the front wheel rotation sensor connector [A].
● Recheck the continuity between the terminal 9 (BK) and terminal 8 (R/BK) of the ABS hydraulic unit connector.
★If there is continuity, repair or replace the main harness.
★If there is no continuity, replace the front wheel rotation sensor.

Step 2
● Check for continuity between the terminal 9 (BK) [A] and terminal 6 (W/G) [B] of the ABS hydraulic unit connector.
★If there is continuity, go to next step.
★If there is no continuity, go to step 3.

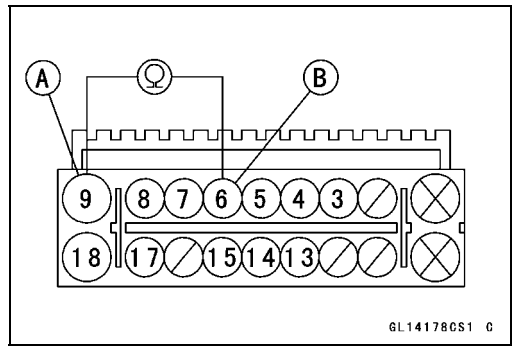

Step 2-1
● Disconnect the rear wheel rotation sensor connector.
● Recheck the continuity between the terminal 9 (BK) [A] and terminal 6 (W/G) [B] of the ABS hydraulic unit connector.
★If there is continuity, repair or replace the main harness.
★If there is no continuity, replace the rear wheel rotation sensor.

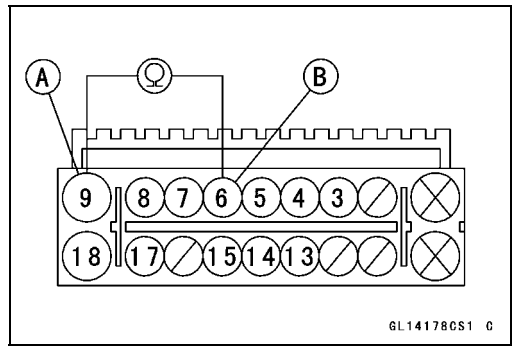

Anti-Lock Brake System (Equipped Models)

Step 3
- Connect the front wheel rotation sensor connector.
- Check for continuity between the terminal 9 (BK) [A] and terminal 17 (BK/W) [B] of the ABS hydraulic unit connector.

★If there is continuity, go to next step.
★If there is no continuity, go to step 4.

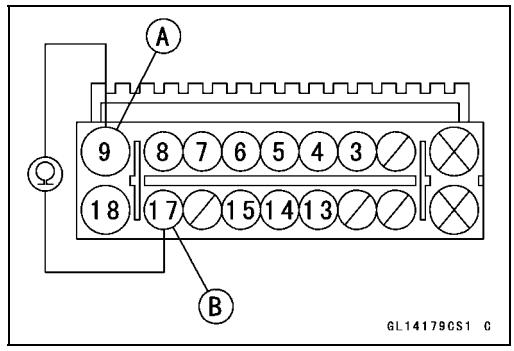

Step 3-1
- Disconnect the front wheel rotation sensor connector.
- Recheck the continuity between the terminal 9 (BK) [A] and terminal 17 (BK/W) [B] of the ABS hydraulic unit connector.

★If there is continuity, repair or replace the main harness.
★If there is no continuity, replace the front wheel rotation sensor.

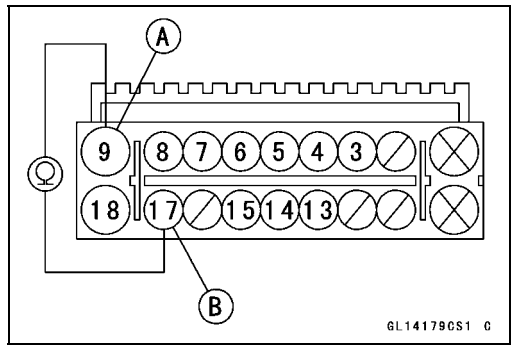

Step 4
- Disconnect the front wheel rotation sensor connector [A].
- Check for continuity between the terminal 8 (R/BK) [B] of the ABS hydraulic unit connector [C] and terminal 1 (R/BK) [D] of the front wheel rotation sensor connector (main harness side).

★If there is no continuity, repair or replace the main harness.
★If there is continuity, go to next step.

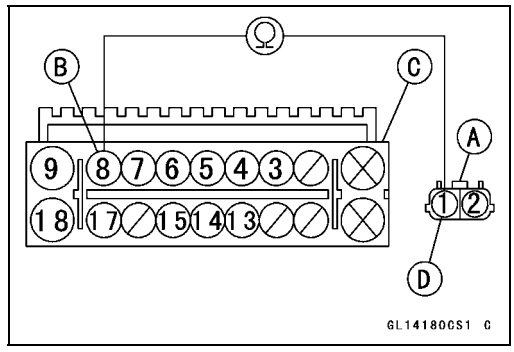

Step 5
- With disconnecting the front wheel rotation sensor connector [A], check for continuity between the terminal 17 (BK/W) [B] of the ABS hydraulic unit connector [C] and the 2 (BK/W) terminal [D] of the front wheel rotation sensor connector (main harness side).

★If there is no continuity, repair or replace the main harness.
★If there is continuity, go to next step.

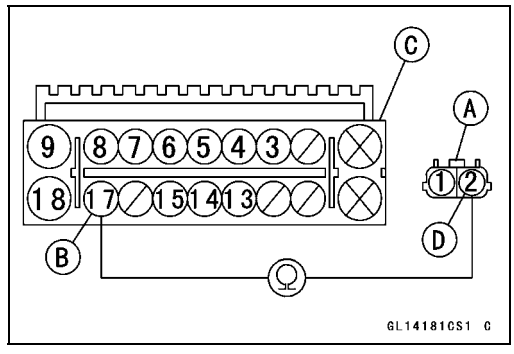

Step 6
- Connect the front wheel rotation sensor connector.
- Connect the 4.5 ~ 5.0 V DC power (e.g. three AA dry battery in series [A]) between the terminal 17 (BK/W) (–) [B] and terminal 8 (R/BK) (+) [C] of the ABS hydraulic unit connector to measure DC amperage.

○Be careful not to reverse connection of the DC power polarity.
○The measured DC amperage should be within 3 ~ 17 mA.

★If measurement is abnormal, replace the front wheel rotation sensor.
★If measurement is normal, replace the ABS hydraulic unit.

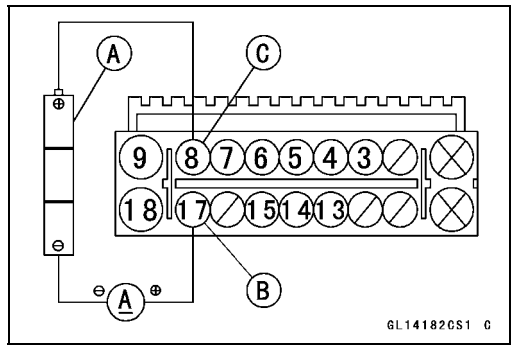

Anti-Lock Brake System (Equipped Models)

Rear Wheel Rotation Sensor Wiring Inspection (Service Code 45)

○This code is indicates there is a trouble in the rear wheel rotation sensor. However the front and rear wheel rotation sensor inspection should be performed if this code is indicated.

- Perform the Pre-Diagnosis Inspection 1 and 2.
- Check the system connectors for loose or poorly contact.

Step 1

- Disconnect the ABS hydraulic unit connector.
- Check for continuity between the terminal 9 (BK) [A] and terminal 8 (R/BK) [B] of the ABS hydraulic unit connector.

★If there is continuity, go to next step.
★If there is no continuity, go to step 2.

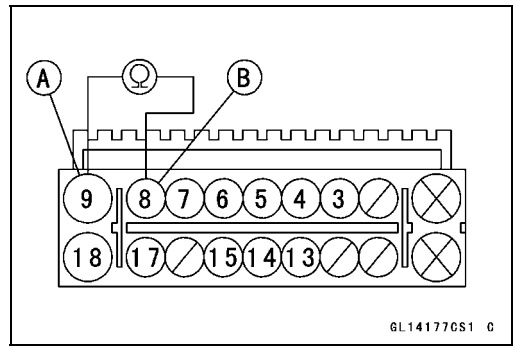

Step 1-1

- Disconnect the front wheel rotation sensor connector [A].
- Recheck the continuity between the terminal 9 (BK) and terminal 8 (R/BK) of the ABS hydraulic unit connector.

★If there is continuity, repair or replace the main harness.
★If there is no continuity, replace the front wheel rotation sensor.

Step 2

- Check for continuity between the terminal 9 (BK) [A] and terminal 6 (W/G) [B] of the ABS hydraulic unit connector.

★If there is continuity, go to next step.
★If there is no continuity, go to step 3.

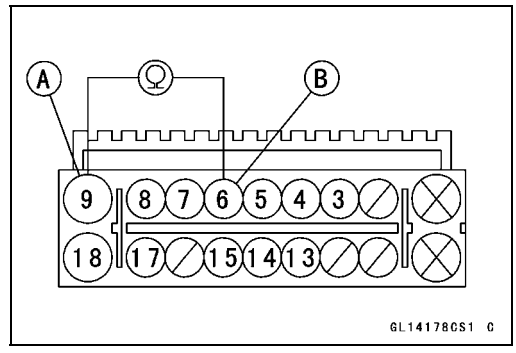

Step 2-1

- Disconnect the rear wheel rotation sensor connector.
- Recheck the continuity between the terminal 9 (BK) [A] and terminal 6 (W/G) [B] of the ABS hydraulic unit connector.

★If there is continuity, repair or replace the main harness.
★If there is no continuity, replace the rear wheel rotation sensor.

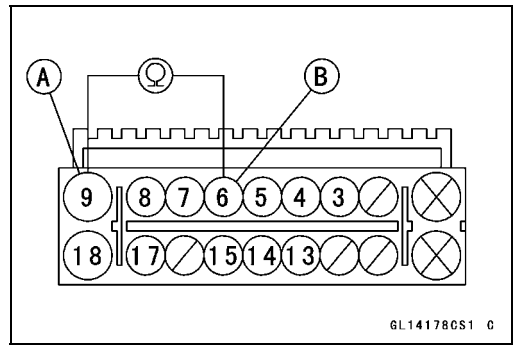

Anti-Lock Brake System (Equipped Models)

Step 3
- Connect the rear wheel rotation sensor connector.
- Check for continuity between the terminal 9 (BK) [A] and terminal 15 (BK/O) [B] of the ABS hydraulic unit connector.

★If there is continuity, go to next step.
★If there is no continuity, go to step 4.

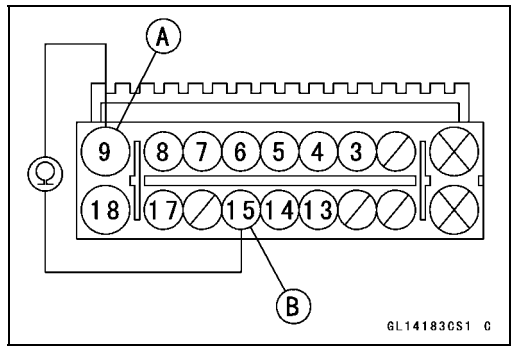

Step 3-1
- Disconnect the rear wheel rotation sensor connector [A].
- Recheck the continuity between the terminal 9 (BK) and terminal 15 (BK/O) of the ABS hydraulic unit connector.

★If there is continuity, repair or replace the main harness.
★If there is no continuity, replace the rear wheel rotation sensor.

Step 4
- Disconnect the rear wheel rotation sensor connector [A].
- Check for continuity between the terminal 6 (W/G) [B] of the ABS hydraulic unit connector [C] and terminal 1 (W/G) [D] of the rear wheel rotation sensor connector (main harness side).

★If there is no continuity, repair or replace the main harness.
★If there is continuity, go to next step.

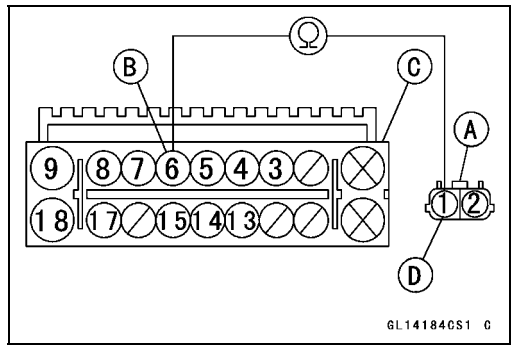

Step 5
- With disconnecting the rear wheel rotation sensor connector [A], check for continuity between the terminal 15 (BK/O) [B] of the ABS hydraulic unit connector [C] and terminal 2 (BK/O) [D] of the rear wheel rotation sensor connector (main harness side).

★If there is no continuity, repair or replace the main harness.
★If there is continuity, go to next step.

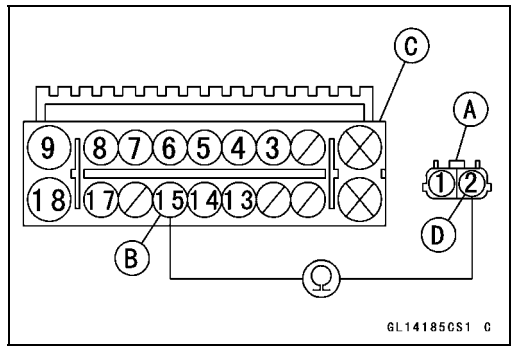

Step 6
- Connect the rear wheel rotation sensor connector.
- Connect the 4.5 ~ 5.0 V DC power (e.g. three AA dry battery in series [A]) between the terminal 15 (BK/O) (–) [B] and terminal 6 (W/G) (+) [C] of the ABS hydraulic unit connector to measure DC amperage.

○Be careful not to reverse connection of the DC power polarity.
○The measured DC amperage should be within 3 ~ 17 mA.

★If measurement is abnormal, replace the rear wheel rotation sensor.
★If measurement is normal, replace the ABS hydraulic unit.

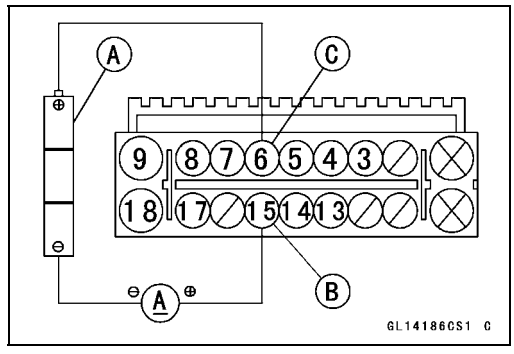

Anti-Lock Brake System (Equipped Models)

Power Supply Voltage Abnormal Inspection (Service Code 52: Low Voltage) (Service Code 53: High Voltage)

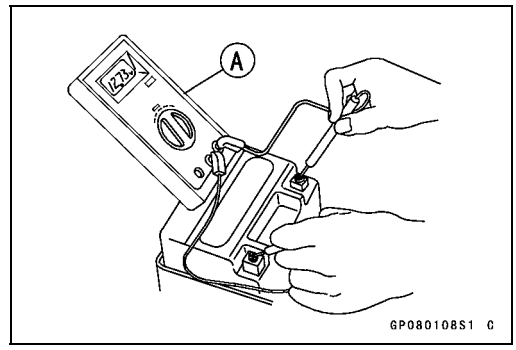

Step 1

- Measure the battery terminal voltage using a voltmeter [A].

○The battery voltage should be within 10 ~ 16 V.

★If the voltage is not within the specifications, recharge or replace the battery.

★If the voltage within the specifications, go to next step.

Step 2

- Check the ABS fuse 30 A [A] in the fuse box (2) for blown.

★If the ABS fuse is blown, replace the fuse.

★If the fuse is not blown, go to next step.

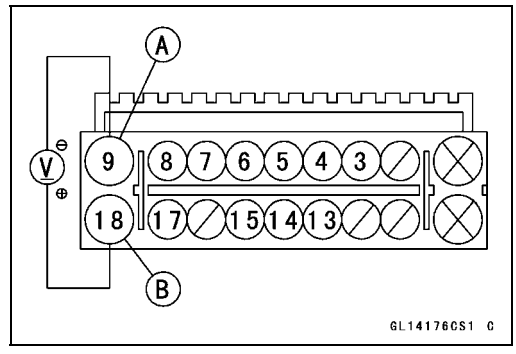

Step 3

- Disconnect the ABS hydraulic unit connector.
- Check the voltage between the terminal 9 (BK) (–) [A] and terminal 18 (R/W) (+) [B] of the ABS hydraulic unit connector.

○The battery voltage (10 ~ 16 V) should appear while the ignition switch turned on.

★If the battery voltage does not appear, repair or replace the main harness.

★If the battery voltage appeared, go to next step.

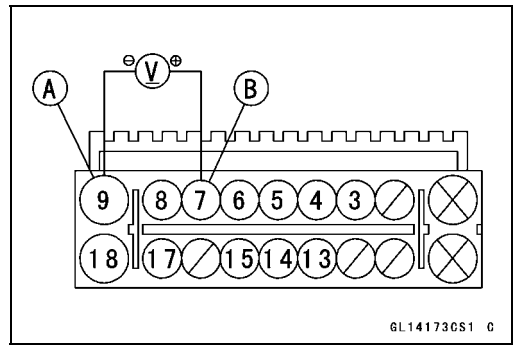

Step 4

- Check the voltage between the terminal 9 (BK) (–) [A] and terminal 7 (BR/W) (+) [B] of the ABS hydraulic unit connector.

○The battery voltage (10 ~ 16 V) should appear while the ignition switch turned on.

★If the battery voltage not appeared, repair or replace the main harness.

★If the battery voltage does appear, replace the ABS hydraulic unit.

ABS Hydraulic Unit Internal Error Inspection (Service Code 55)

○This service code indicates there is an internal error for the ECU integrated with the ABS hydraulic unit regarding the wheel speed detection.

- Perform the Pre-Diagnosis Inspection 1 and 2.
- Check the system connectors for loose or poorly contact.

Step 1

- Measure the front and rear wheel rotation sensor air gaps (see Wheel Rotation Sensor Air Gap Inspection).

★If the air gap is not within the specification, correct the air gap accordingly.

★If the air gap is within the specification, go to next step.

Anti-Lock Brake System (Equipped Models)

Step 2

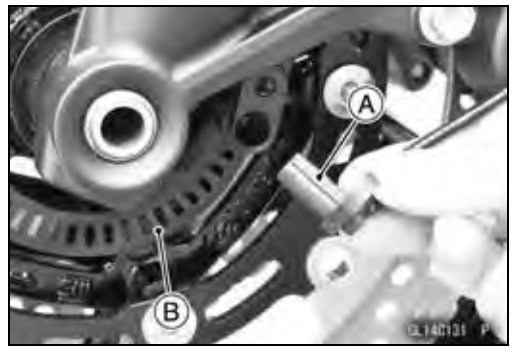

- Check that there is iron or other magnetic deposits between the both wheel rotation sensor [A] and sensor rotor [B], and the sensor rotor slots for obstructions.
- Check the installation condition of the sensor for looseness.
- Check the sensor tip and sensor rotor slots for deformation or damage (e.g. chipped sensor rotor teeth).

★If the sensor and sensor rotor in bad condition, clean or replace the faulty parts.

★If all items are correct, go to next step.

Step 3

- Check the front and rear tire/wheel conditions for tire pressure, tire size/types, abnormal wear and deformations (see Wheels/Tires in the Periodic Maintenance chapter).

★If the tire and/or wheel are in bad condition, correct them to the normal condition.

★If there is no problem, replace the ABS hydraulic unit.

ABS Hydraulic Unit Removal

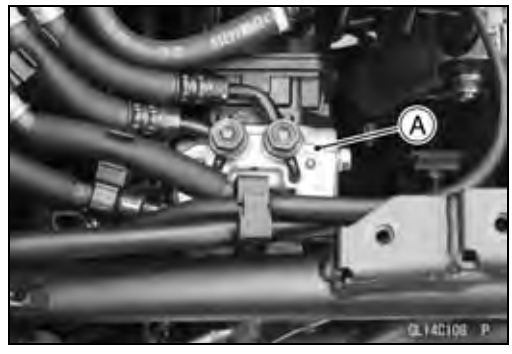

NOTICE

The ABS hydraulic unit [A] has been adjusted and set with precision at the factory. Therefore, it should be handled carefully, never struck sharply, as with a hammer, or allowed to fall on a hard surface.
Be careful not to get water or mud on the ABS hydraulic unit.

- Drain the brake fluid from the front and rear brake lines.

○Drain the brake fluid through the bleed valve by pumping the brake lever and pedal.

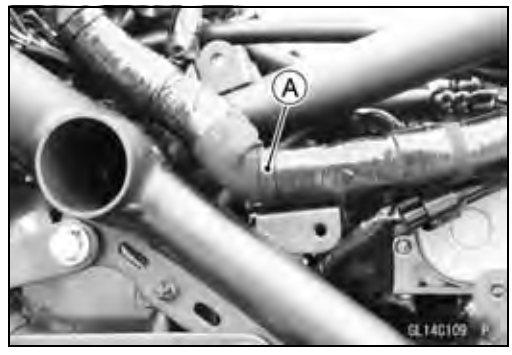

- Remove:
  Fuel Tank (see Fuel Tank Removal in the Fuel System (DFI) chapter)
  Frame Sub Cover (see Frame Sub Cover Removal in the Frame chapter)
- Open the clamp [A].
- Clean the ABS hydraulic unit.

NOTICE

Clean all fittings on the ABS hydraulic unit and the rear master cylinder because dirt around the banjo bolts could contaminate the brake fluid in the line during removal/installation. Spread over a shop towel around the ABS hydraulic unit before removing the brake line so that brake fluid does not leak on the parts.

Anti-Lock Brake System (Equipped Models)

- Remove:
  Brake Pipe Banjo Bolts [A]
- Disconnect the brake pipes from the ABS hydraulic unit.

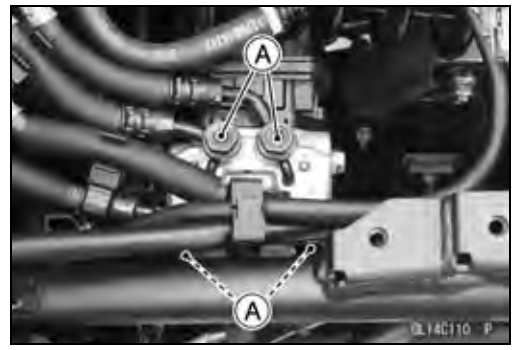

NOTICE
Brake fluid quickly damages painted plastic surfaces; any spilled fluid should be completely washed away immediately.

- Pull the lever [A] backward to disconnect the ABS hydraulic unit connector [B].

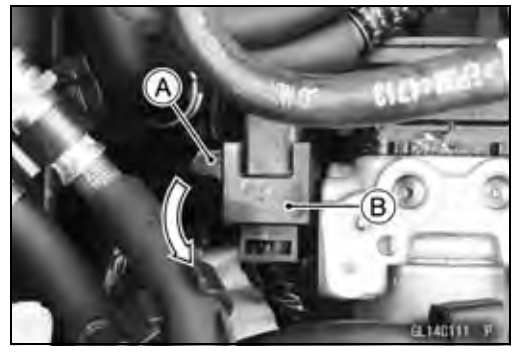

- Remove:
  ABS Hydraulic Unit Bracket Bolts [A]
- Remove the ABS hydraulic unit [B] together with the bracket.

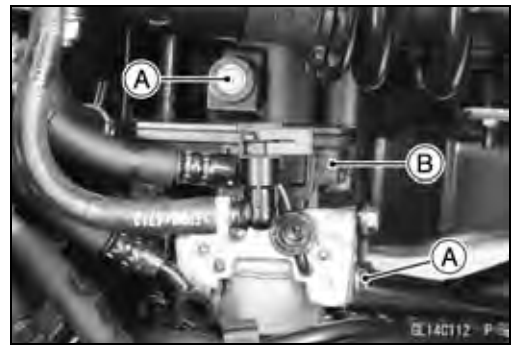

- Remove:
  ABS Hydraulic Unit Bolts [A] and Washers
  Bracket [B]

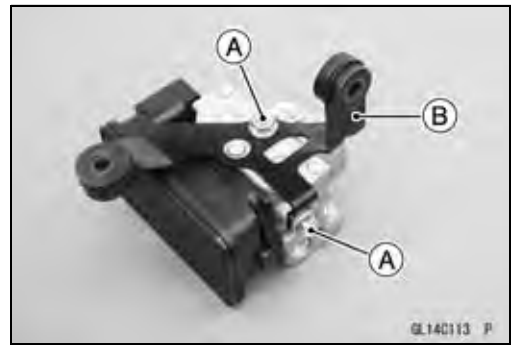

NOTICE
The ABS hydraulic unit has been adjusted and set with precision at the factory. Do not try to disassemble and repair the ABS hydraulic unit.

ABS Hydraulic Unit Installation

NOTICE
Brake fluid quickly damages painted plastic surfaces; any spilled fluid should be completely washed away immediately.

Anti-Lock Brake System (Equipped Models)

- Installation is the reverse of removal.
- Be sure to install the dampers [A] and collars [B] on the bracket [C].
- Install the washers [D].
- Tighten:

Torque - ABS Hydraulic Unit Bolts [E]: 8.8 N·m (0.90 kgf·m, 78 in·lb)
ABS Hydraulic Unit Bracket Bolts [F]: 8.8 N·m (0.90 kgf·m, 78 in·lb)

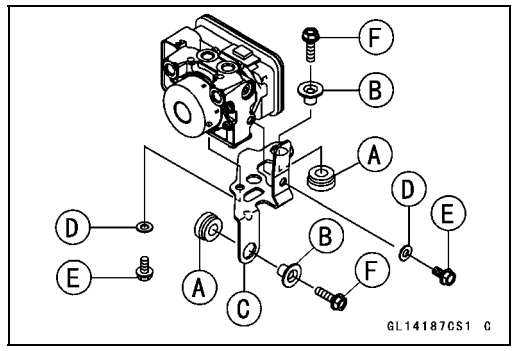

- Pull the lever [A] forward to connect the ABS hydraulic unit connector [B].
- Replace the washers that are on each side of pipe fitting with new one.
- Install the brake pipes (see Cable, Wire, and Hose Routing section in the Appendix chapter).
- Tighten:

Torque - Brake Pipe Banjo Bolts: 33 N·m (3.4 kgf·m, 24 ft·lb)

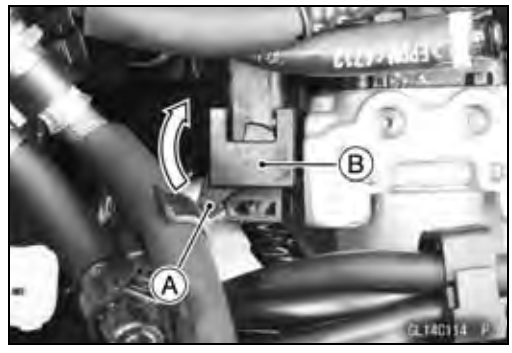

- Bleed the brake line (see Brake Line Bleeding).
- Check the brake for good braking power, no brake drag, and no fluid leakage.

ABS Hydraulic Unit Inspection

- Remove the ABS hydraulic unit (see ABS Hydraulic Unit Removal).
- Visually inspect the ABS hydraulic unit.

★Replace the ABS hydraulic unit if any of them are cracked, or otherwise damaged.

- Visually inspect the connector terminals [A].

★Replace the ABS hydraulic unit or main harness if either of the terminals are cracked, bent, or otherwise damaged.

★If the ABS hydraulic unit connector is clogged with mud or dust, blow it off with compressed air.

Front Wheel Rotation Sensor Removal

NOTICE
The wheel rotation sensor should be handled carefully, never struck sharply, as with a hammer, or allowed to fall on a hard surface since the wheel rotation sensor is precision made. Be careful not to get water or mud on the wheel rotation sensor. **Do not try to disassemble or repair the wheel rotation sensor.**

Anti-Lock Brake System (Equipped Models)

- Remove the headlight assy (see Upper Fairing Removal in the Frame chapter).
- Disconnect the front wheel rotation sensor lead connector [A].
- Remove the front wheel rotation sensor from the bracket [B].
- Clear the sensor lead from the clamp [C].

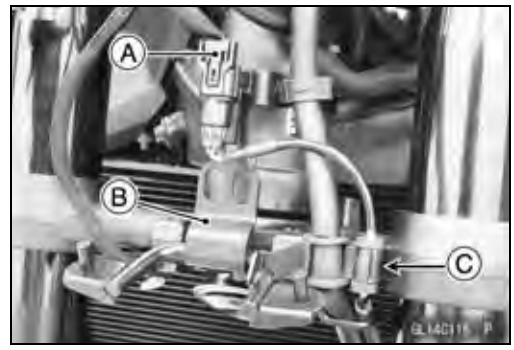

- Clear the sensor lead from the clamps [A].

- Remove:
  Front Wheel Rotation Sensor Bolt [A]
  Front Wheel Rotation Sensor [B]

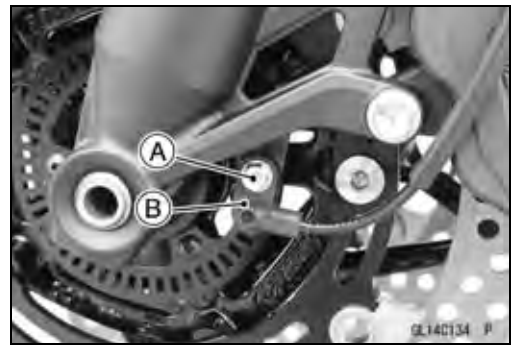

Front Wheel Rotation Sensor Installation

- Installation is the reverse of removal.
- Tighten:

Torque - Front Wheel Rotation Sensor Bolt: 6.9 N·m (0.70 kgf·m, 61 in·lb)

- Run the lead correctly (see Cable, Wire, and Hose Routing section in the Appendix chapter).

Rear Wheel Rotation Sensor Removal

NOTICE
The wheel rotation sensor should be handled carefully, never struck sharply, as with a hammer, or allowed to fall on a hard surface since the wheel rotation sensor is precision made. Be careful not to get water or mud on the wheel rotation sensor. **Do not try to disassemble or repair the wheel rotation sensor.**

Anti-Lock Brake System (Equipped Models)

- Remove:
  Fuel Tank (see Fuel Tank Removal in the Fuel System (DFI) chapter)
  Mud Guard (see Mud Guard Removal in the Frame chapter)
- Remove the connector bracket [A] from the air cleaner housing.
- Remove the rear wheel rotation sensor from the connector bracket.
- Disconnect the rear wheel rotation sensor lead connector [B].
- Clear the sensor lead from the clamp [C].

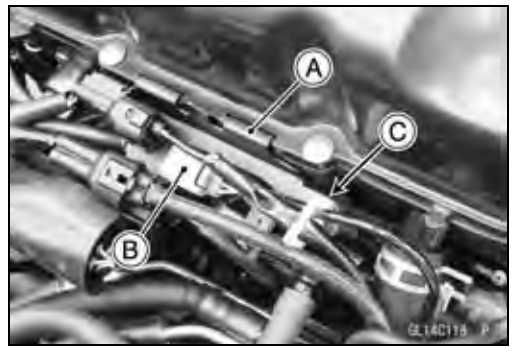

- Open the clamps [A].
- Clear the sensor lead from the clamp [B].

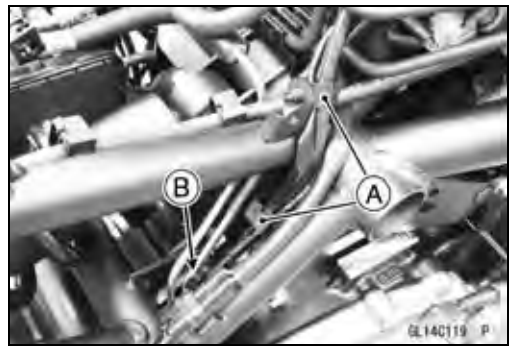

- Clear the sensor lead from the clamps [A].
- Remove:
  Bolt [B]
  Clamp

- Clear the sensor lead from the clamps [A].

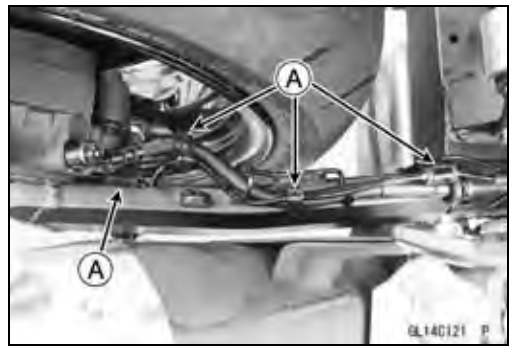

Anti-Lock Brake System (Equipped Models)

● Remove:
Rear Wheel Rotation Sensor Bolt [A]
Rear Wheel Rotation Sensor [B]

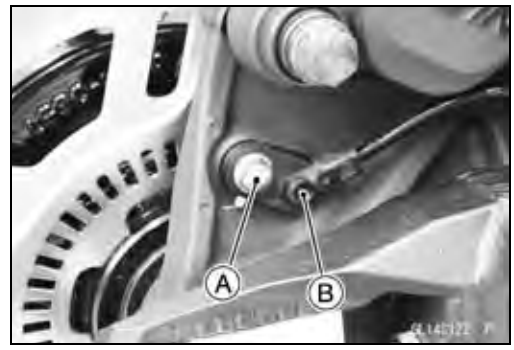

Rear Wheel Rotation Sensor Installation

● Installation is the reverse of removal.
● Tighten:

Torque - Rear Wheel Rotation Sensor Bolt: 6.9 N·m (0.70 kgf·m, 61 in·lb)

● Run the lead correctly (see Cable, Wire, and Hose Routing section in the Appendix chapter).

Wheel Rotation Sensor Inspection

● Remove the front wheel rotation sensor [A] from the front fork.
● Remove the rear wheel rotation sensor [B] from the caliper bracket.
● Visually inspect the wheel rotation sensors.
★ Replace the wheel rotation sensor if it is cracked, bent, or otherwise damaged.

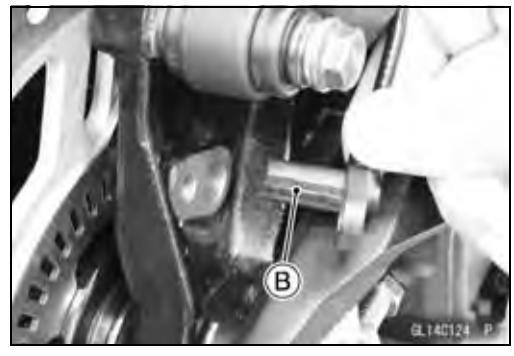

Anti-Lock Brake System (Equipped Models)

Wheel Rotation Sensor Air Gap Inspection

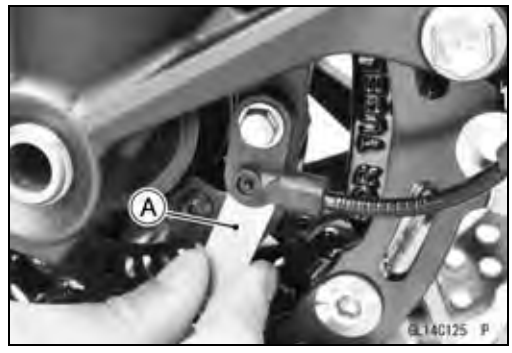

- Raise the front/rear wheel off the ground (see Front/Rear Wheel Removal in the Wheels/Tires chapter).
- Measure the air gap between the sensor and sensor rotor at several points by turning the wheel slowly.
  Thickness Gauge [A]

Air Gap
Standard:

Front	**0.2 ~ 1.5 mm (0.01 ~ 0.06 in.)**
Rear	**0.2 ~ 1.5 mm (0.01 ~ 0.06 in.)**

NOTE

○*The sensor air gap cannot be adjusted.*

★If the air gap is not within the specification, inspect the hub bearing (see Hub Bearing Inspection in the Wheels/Tires chapter), sensor installation condition and sensor (see Wheel Rotation Sensor Inspection).

Wheel Rotation Sensor Rotor Inspection

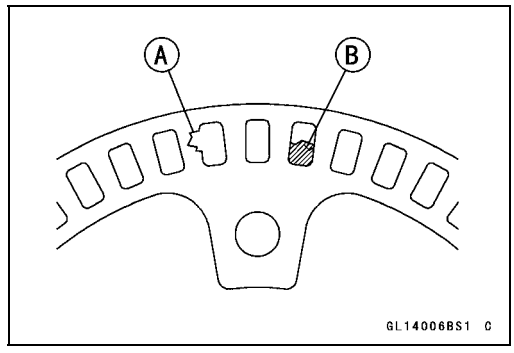

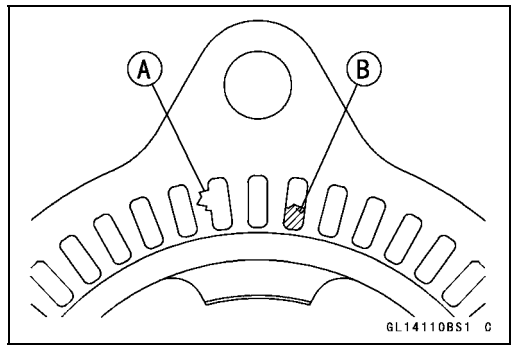

- Visually inspect the wheel rotation sensor rotor.

★If the rotor is deformed or damaged (chipped teeth [A]), replace the sensor rotor with a new one.

★If there is iron or other magnetic deposits [B], remove the deposits.

Fuse Removal

- Refer to the Fuse Box Fuse Removal in the Electrical System chapter.

Fuse Installation

- If a fuse fails during operation, inspect the electrical system to determine the cause, and then replace it with a new fuse of proper amperage (see Fuse Installation in the Electrical System chapter).

Fuse Inspection

- Refer to the Fuse Inspection in the Electrical System chapter.

Suspension

Table of Contents

Exploded View 13-2
Specifications 13-6
Special Tools 13-7
Front Fork 13-9
Rebound Damping Force Adjustment (Left Front Fork Only) 13-9
Spring Preload Adjustment (Left Front Fork Only) 13-9
Front Fork Removal (Each Fork Leg) 13-10
Front Fork Installation 13-10
Front Fork Oil Change 13-10
Front Fork Disassembly 13-25
Front Fork Assembly 13-27
Inner Tube, Outer Tube Inspection 13-28
Dust Seal Inspection 13-29
Spring Tension Inspection 13-29
Rear Shock Absorber 13-30
Rebound Damping Force Adjustment 13-30
Spring Preload Adjustment 13-30
Rear Shock Absorber Removal 13-30
Rear Shock Absorber Installation 13-31
Rear Shock Absorber Inspection 13-32
Rear Shock Absorber Scrapping 13-32
Swingarm 13-33
Swingarm Removal 13-33
Swingarm Installation 13-33
Swingarm Bearing Removal 13-34
Swingarm Bearing Installation 13-35
Swingarm Bearing, Sleeve Inspection 13-36
Swingarm Bearing Lubrication 13-36
Chain Guide Inspection 13-36
Tie-Rod, Rocker Arm 13-37
Tie-Rod Removal 13-37
Tie-Rod Installation 13-37
Rocker Arm Removal 13-38
Rocker Arm Installation 13-39
Tie-Rod and Rocker Arm Bearing Removal 13-39
Tie-Rod and Rocker Arm Bearing Installation 13-40
Rocker Arm/Tie-Rod Bearing, Sleeve Inspection 13-40
Rocker Arm/Tie-Rod Bearing Lubrication 13-40

Exploded View

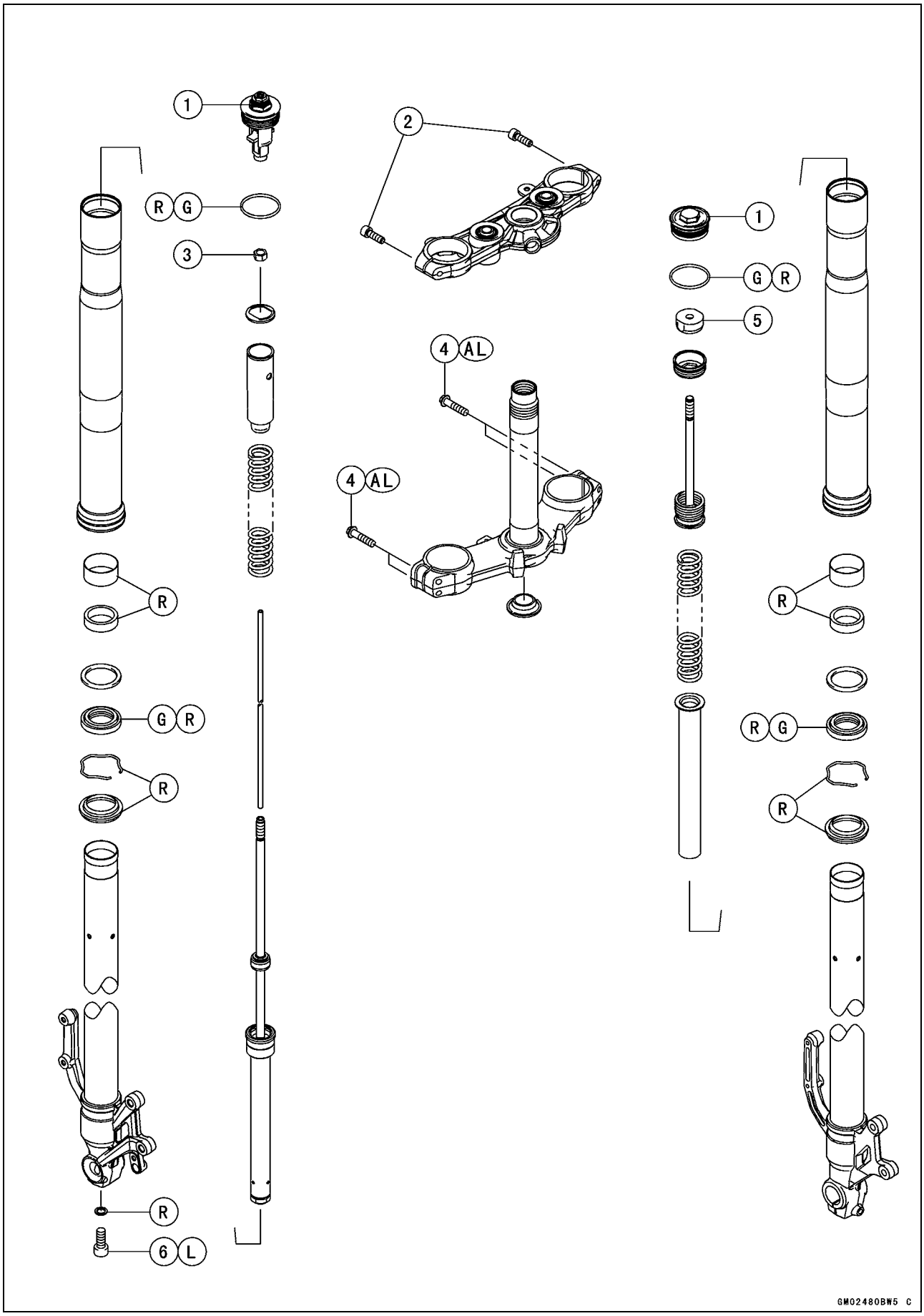

Exploded View

No.	Fastener	Torque			Remarks
		N·m	kgf·m	ft·lb	
1	Front Fork Top Plugs	22.5	2.29	16.6	
2	Upper Front Fork Clamp Bolts	20	2.0	15	
3	Piston Rod Nut	15	1.5	11	
4	Lower Front Fork Clamp Bolts	20.5	2.09	15.1	AL
5	Piston Rod Rubber Nut	15	1.5	11	
6	Front Fork Bottom Allen Bolt	23	2.3	17	L

AL: Tighten the two clamp bolts alternately two times to ensure even tightening torque.
G: Apply grease.
L: Apply a non-permanent locking agent.
R: Replacement Parts

Exploded View

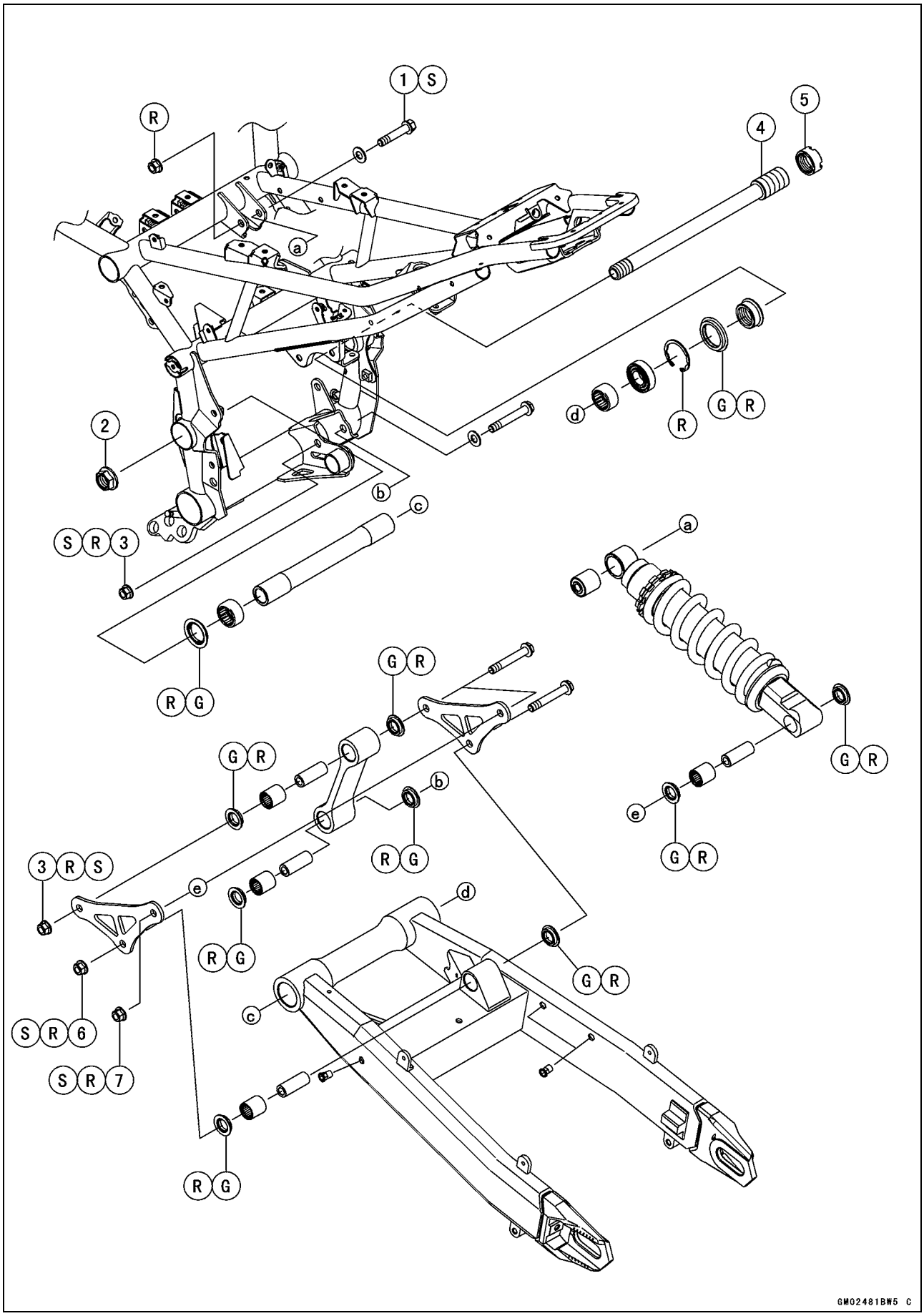

Exploded View

No.	Fastener	Torque			Remarks
		N·m	kgf·m	ft·lb	
1	Upper Rear Shock Absorber Bolt	44	4.5	32	S
2	Swingarm Pivot Shaft Nut	108	11.0	79.7	
3	Tie-Rod Nuts	44	4.5	32	R, S
4	Swingarm Pivot Shaft	9.8	1.0	87 in·lb	
5	Swingarm Pivot Shaft Locknut	98	10	72	
6	Rocker Arm Nut	44	4.5	32	R, S
7	Lower Rear Shock Absorber Nut	44	4.5	32	R, S

G: Apply grease.
R: Replacement Parts
S: Follow the specified tightening sequence.

Specifications

Item	Standard
Front Fork	
Fork Inner Tube Diameter	ϕ41 mm (1.6 in.)
Air Pressure	Atmospheric pressure (non-adjustable)
Rebound Damper Setting	7 clicks from the fully clockwise position (Usable Range: 0 ←→ 12 clicks)
Fork Spring Preload Setting	8 turns in from the fully counterclockwise position (Usable Range: 0 ←→ 30 turns in)
Suspension Oil	Kawasaki KHL15-10 or equivalent
Amount:	
Right Front Fork:	
When Changing Oil	Approx. 440 mL (14.9 US oz.)
After Disassembly and Completely Dry	515 ±4 mL (17.4 ±0.14 US oz.)
Left Front Fork:	
When Changing Oil	Approx. 370 mL (12.5 US oz.)
After Disassembly and Completely Dry	434 ±4 mL (14.7 ±0.14 US oz.)
Fork Oil Level:	
Right Front Fork	99 ±2 mm (3.9 ±0.08 in.) (fully compressed, without spring, below from the top of outer tube)
Left Front Fork	99 ±2 mm (3.9 ±0.08 in.) (fully compressed, without spring, below from the top of outer tube)
Fork Spring Free Length	279.9 mm (11.02 in.) (Service Limit: 275 mm (10.8 in.))
Rear Shock Absorber	
Rebound Damper Setting	1 1/4 turns out from the fully clockwise position (Usable Range: 0 ←→ 1 4/5 turns out)
Spring Preload Setting Position:	
Standard	Spring length: 199.6 mm (7.86 in.)
Usable Range	Spring length: 190.5 ~ 200.5 mm (7.500 ~ 7.894 in.) (stronger to weaker)
Gas Pressure	1 500 kPa (15.30 kgf/cm², 217.5 psi, Non-adjustable)

Special Tools

Inside Circlip Pliers:
57001-143

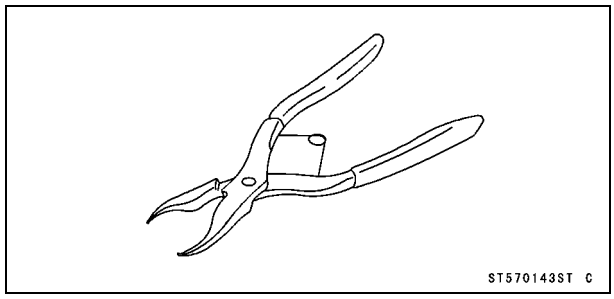

Fork Oil Level Gauge:
57001-1290

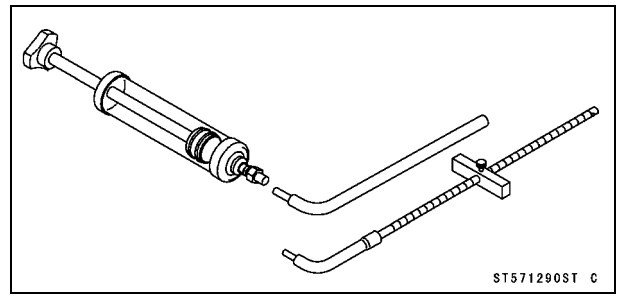

Oil Seal & Bearing Remover:
57001-1058

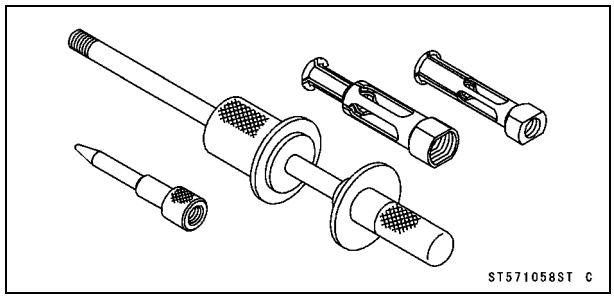

Fork Spring Stopper:
57001-1374

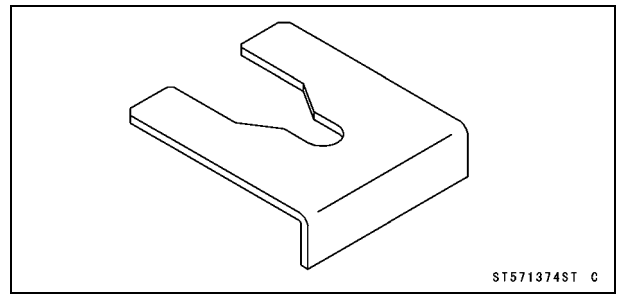

Bearing Driver Set:
57001-1129

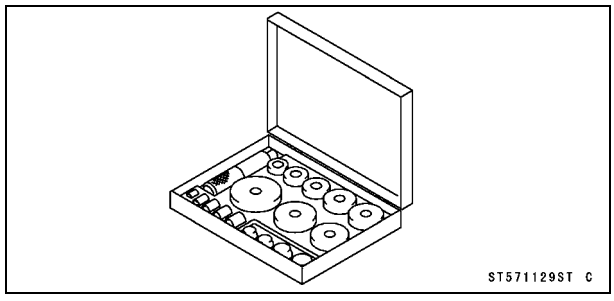

Hook Wrench T=3.2 R37:
57001-1539

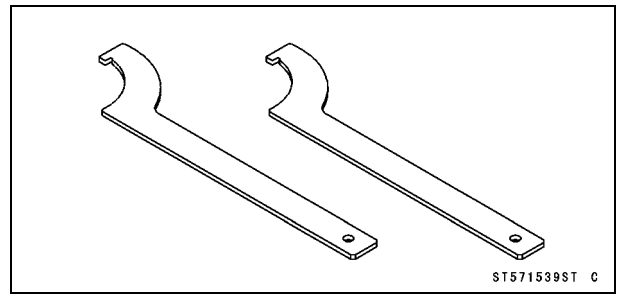

Fork Oil Seal Driver, ϕ41:
57001-1288

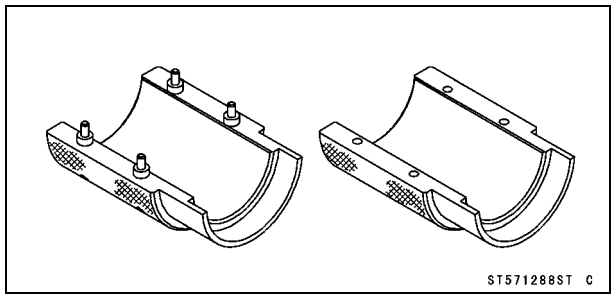

Fork Spring Compressor:
57001-1540

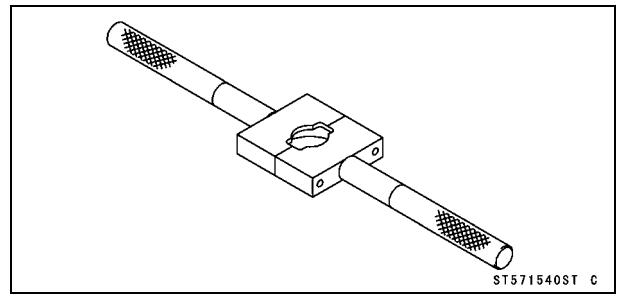

Fork Piston Rod Puller, M12 × 1.25:
57001-1289

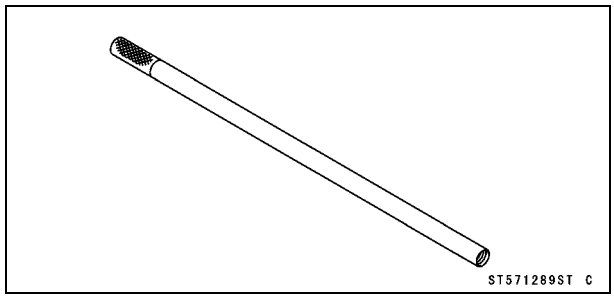

Fork Spring Compressor:
57001-1587

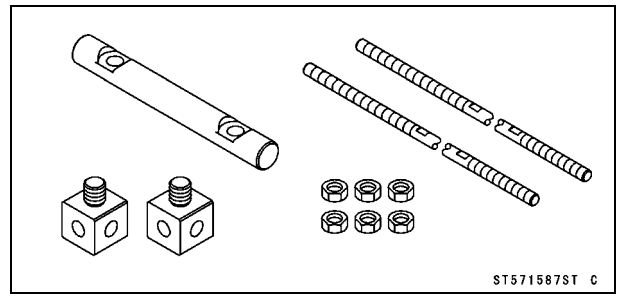

Special Tools

Needle Bearing Driver, ϕ17/ϕ18:
57001-1609

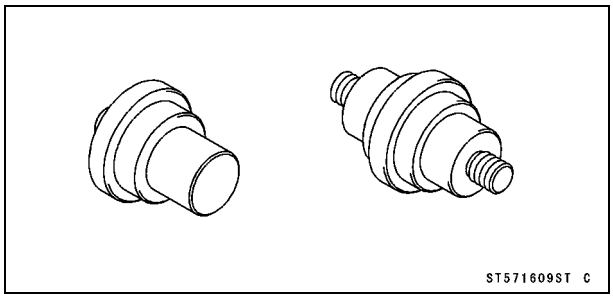

Bar:
57001-1751

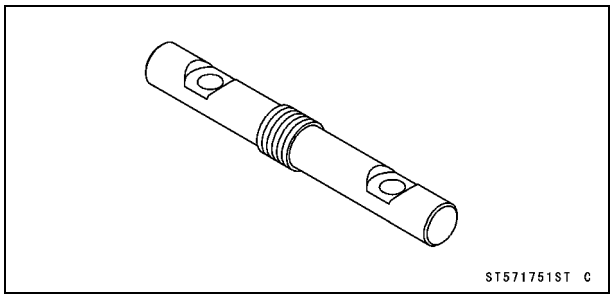

Fork Spring Compressor:
57001-1771

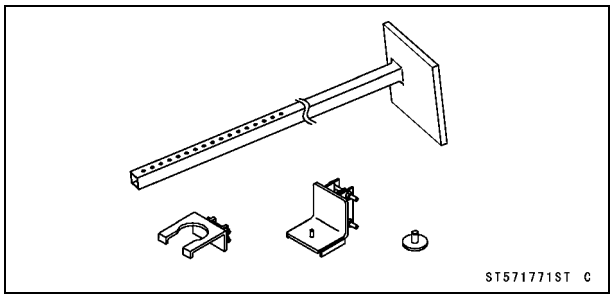

Fork Piston Rod Stopper Holder:
57001-1789

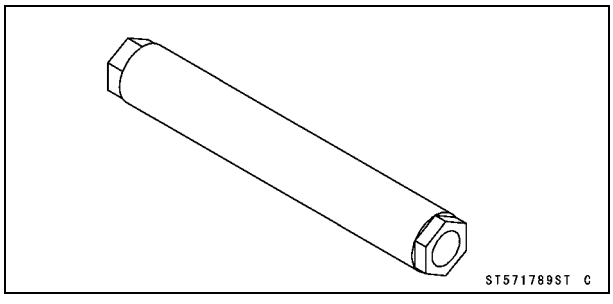

Fork Oil Seal Driver Weight, ϕ26 ~ϕ46:
57001-1795

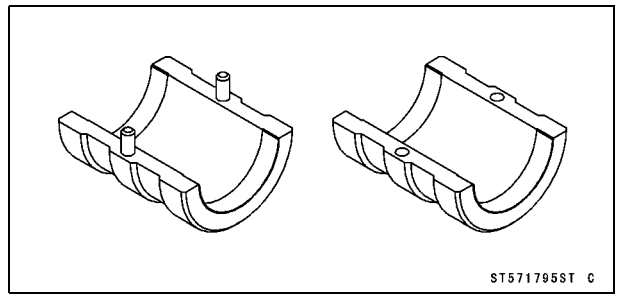

Fork Oil Seal Driver Attachment, ϕ36 ~ϕ46:
57001-1798

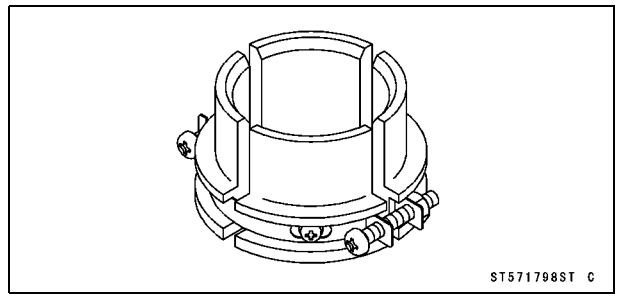

Swingarm Pivot Nut Wrench:
57001-1872

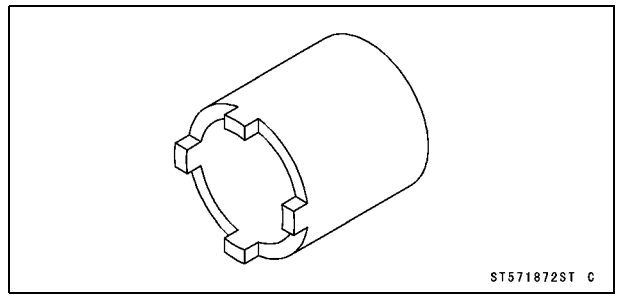

Front Fork

Rebound Damping Force Adjustment (Left Front Fork Only)

● To adjust the rebound damping force, turn the rebound damping adjuster [A].

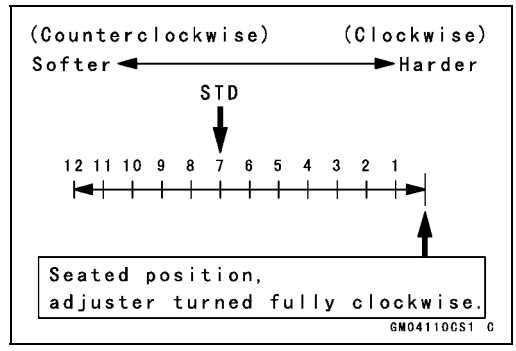

○The standard adjuster setting is the **7 clicks** from the fully clockwise position.

○The damping force can be left soft for average riding. But it should be adjusted harder for high speed riding or riding with a passenger. If the damping feels too soft or too stiff, adjust it in accordance with the following table.

Rebound Damping Force Adjustment

Adjuster Position	Damping Force	Setting	Load	Road	Speed
12	Weak	Soft	Light	Good	Low
↑	↑	↑	↑	↑	↑
↓	↓	↓	↓	↓	↓
0	Strong	Hard	Heavy	Bad	High

Spring Preload Adjustment (Left Front Fork Only)

● To adjust the spring preload, turn the spring preload adjuster [A].

○The standard adjuster setting is the **8 turns in** from the fully counterclockwise position.

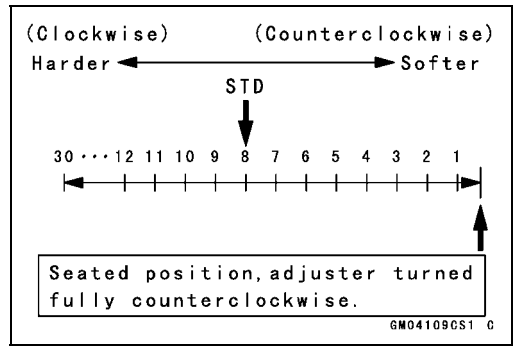

○The spring preload can be left soft for average riding. But it should be adjusted harder for high speed riding or riding with a passenger. If the spring action feels too soft or too stiff, adjust it in accordance with the following table.

Spring Action

Adjuster Position	Damping Force	Setting	Load	Road	Speed
0	Weak	Soft	Light	Good	Low
↑	↑	↑	↑	↑	↑
↓	↓	↓	↓	↓	↓
30 turns in	Strong	Hard	Heavy	Bad	High

Front Fork

Front Fork Removal (Each Fork Leg)

- Remove:
  Front Fender (see Front Fender Removal in the Frame chapter)
  Front Wheel (see Front Wheel Removal in the Wheels/Tires chapter)

★Loosen the upper front fork clamp bolt [A] and fork top plug [B] beforehand if the fork leg is to be disassembled.

○Place a plastic bag over the top plug to protect the top plug.

NOTE

○*Loosen the front fork top plug after loosening the upper front fork clamp bolt.*

- Loosen the upper front fork clamp bolt and lower front fork clamp bolts [C].
- With a twisting motion, work the fork leg down and out.

Front Fork Installation

- Install the fork so that the top plug end [A] of the outer tube as shown.
  6 mm (0.24 in.) [B]
  Steering Stem Head [C]
- Place a plastic bag over the top plug to protect the top plug.
- Tighten:

Torque - Lower Front Fork Clamp Bolts: 20.5 N·m (2.09 kgf·m, 15.1 ft·lb)
Front Fork Top Plugs: 22.5 N·m (2.29 kgf·m, 16.6 ft·lb)
Upper Front Fork Clamp Bolts: 20 N·m (2.0 kgf·m, 15 ft·lb)

NOTE

○*Tighten the two lower front fork clamp bolts alternately two times to ensure even tightening torque.*

○*Tighten the top plug before tightening the upper front fork clamp bolt.*

- Install the removed parts (see appropriate chapters).
- Adjust:
  Spring Preload (see Spring Preload Adjustment)
  Rebound Damping Force (see Rebound Damping Force Adjustment)

Front Fork Oil Change

Left Front Fork

- Remove the front fork (see Front Fork Removal).
- Hold the inner tube lower end in a vise.
- Place a plastic bag over the top plug to protect the top plug.
- Unscrew the top plug [A] out of the outer tube.

Front Fork

● Install the clamps [A] as shown.

NOTE

○*Set the clamps so that the cutout [B] of the upper side does not touch the tongue shape of stopper, pull up the outer tube [C] to hold it by the clamps, and then tighten the two bolts [D]. The outer tube is used as a guide.*

Special Tool - Fork Spring Compressor: 57001-1540

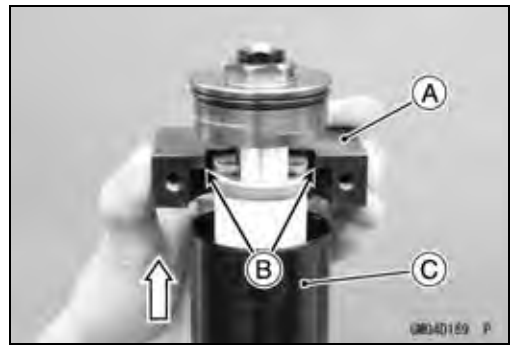

● Set the fork spring compressor [A] and a suitable jack [B] as shown.

Special Tool - Fork Spring Compressor: 57001-1771

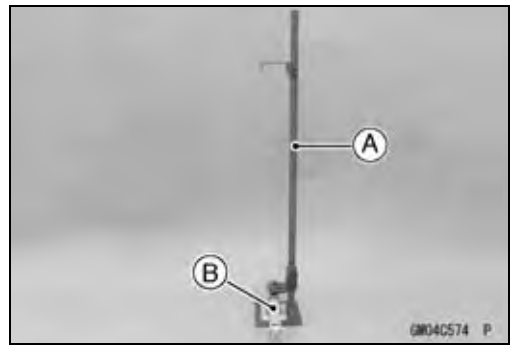

● Insert the projection of the protector [A] into the front fork bottom hole [B].

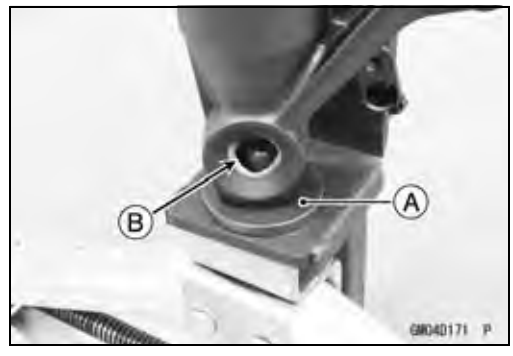

● Set the front fork [A] under the holder [B].
● Lift up the suitable jack, and hold the front fork.

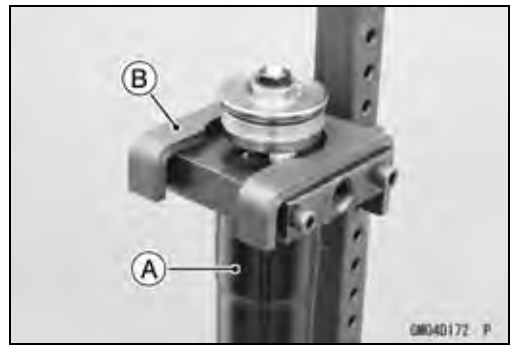

Front Fork

● Lift up the suitable jack until the piston rod nut [A] comes out.
● Insert the fork spring stopper [B] between the piston rod nut and the holder [C] while holding up the top plug [D].

Special Tool - Fork Spring Stopper: 57001-1374

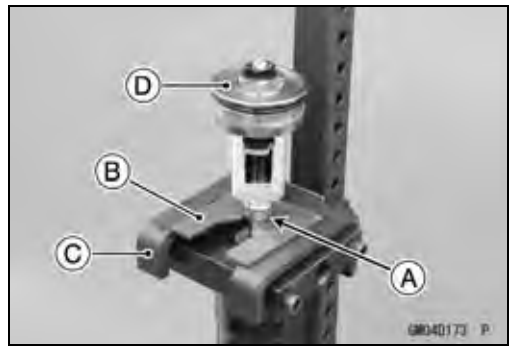

● Holding the piston rod nut with a wrench [A], remove the top plug [B] from the piston rod.
○Place a plastic bag over the top plug to protect the top plug.

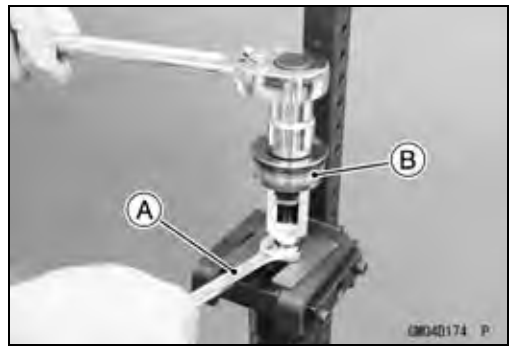

● Remove the front fork from the fork spring compressor.
● Remove:
Washer [A]
Collar [B]
Rebound Damping Adjuster Rod [C]
Fork Spring [D]

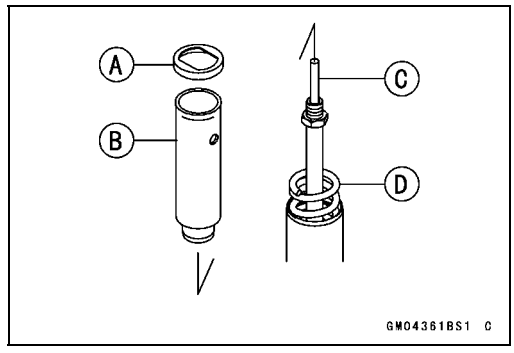

● Screw the rod nut [A] onto the piston rod [B] as shown.
14 mm (0.55 in.) or more [C]

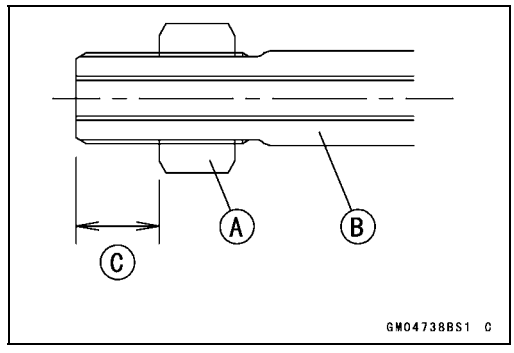

● Drain the fork oil into a suitable container.
○Using the piston rod puller [A], pump the piston rod [B] up and down at least ten times to expel the oil from the fork.

Special Tool - Fork Piston Rod Puller, M12 × 1.25: 57001 -1289

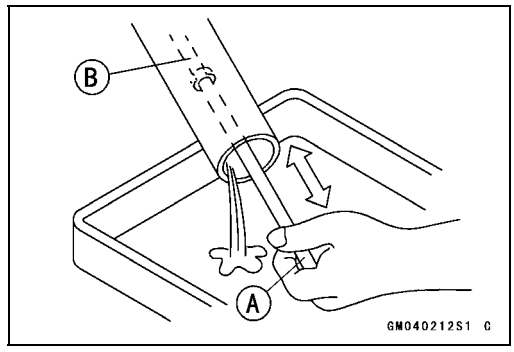

Front Fork

● Hold the fork tube upright, press the outer tube [A] and the piston rod all the way down.
● Pour in the type and amount of fork oil specified.

Suspension Oil - KHL15-10 (1 L): 44091-0004
KHL15-10 (4 L): 44091-0013

Amount:
When changing oil: Approx. 370 mL (12.5 US oz.)
After disassembly and completely dry:
434 ±4 mL (14.7 ±0.14 US oz.)

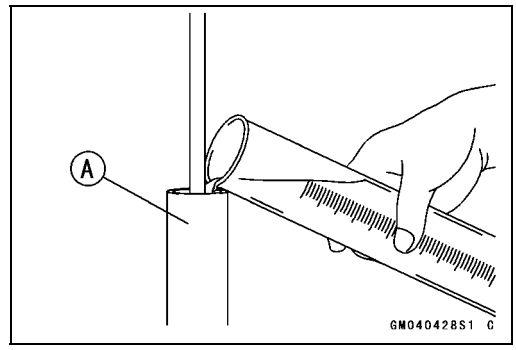

● Measure the oil level as follows.
○Hold the inner tube vertically in a vise.
○Using the piston rod puller [A], move the piston rod [B] up and down more than ten times in order to expel all the air from the fork oil.

Special Tool - Fork Piston Rod Puller, M12 × 1.25: 57001 -1289

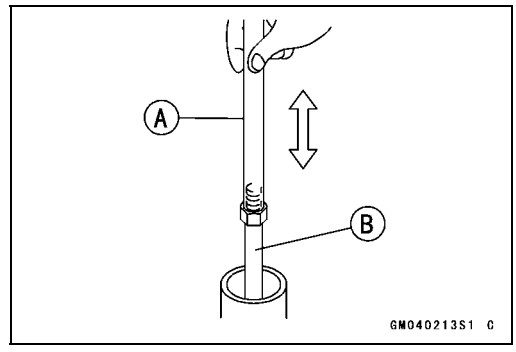

○Remove the piston rod puller.
○Wait until the oil level settles.
○With the fork fully compressed and the piston rod fully pushed in, insert a tape measure or rod into the inner tube, and measure the distance from the top of the outer tube to the oil.

Oil Level (fully compressed, without spring)
Standard: 99 ±2 mm (3.9 ±0.08 in.) (from the top of the outer tube)

NOTE

○*Fork oil level may also be measured using the fork oil level gauge.*

Special Tool - Fork Oil Level Gauge [A]: 57001-1290

○With the fork fully compressed and without fork spring, insert the gauge tube into the inner tube [B] and position the stopper across the top end [C] of the outer tube [D].
○Set the gauge stopper [E] so that its lower side shows the oil level distance specified [F].
○Pull the handle slowly to pump out the excess oil until the oil no longer comes out.
★If no oil is pumped out, there is insufficient oil in the inner tube. Pour in enough oil, then pump out the excess oil as shown above.

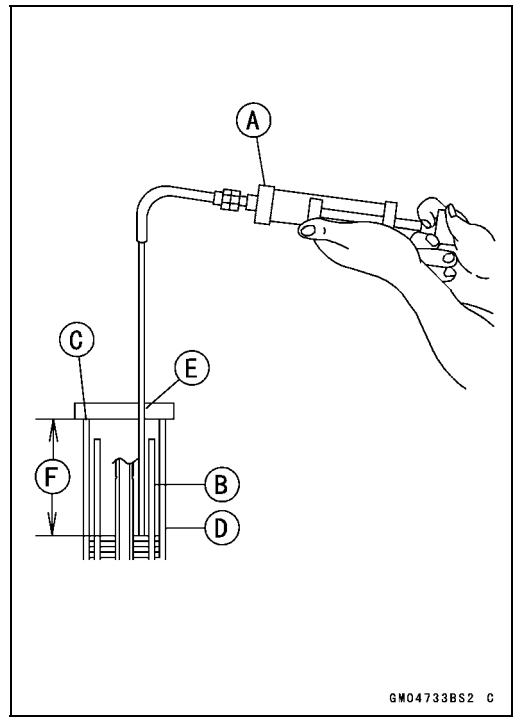

Front Fork

- Screw the fork piston rod puller onto the end of the piston rod.

  Special Tool - Fork Piston Rod Puller, M12 × 1.25: 57001 -1289

- Pull the puller up above the outer tube top.
- Install the fork spring [A] with the smaller end [B] facing upward.

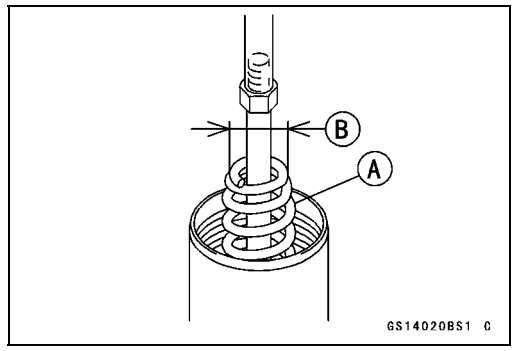

- Install the collar [A] so that the cut side [B] faces downward.
- Install the washer [C] on the collar.

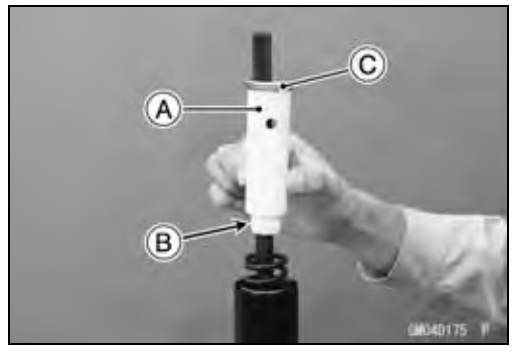

- Install the clamps [A] as shown.

  Special Tool - Fork Spring Compressor: 57001-1540

NOTE

○*Set the clamps so that the cutouts [B] do not fit the hole [C] of the washer [D], pull up the outer tube [E] to hold it by the clamps, and then tighten the two bolts [F]. The outer tube is used as a guide.*

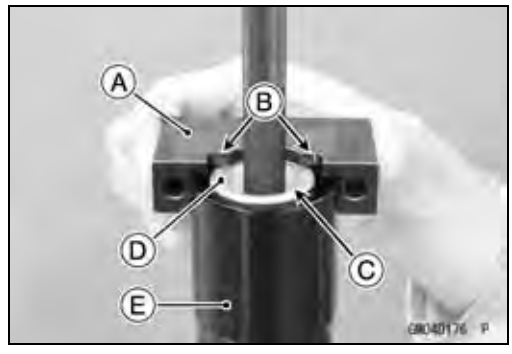

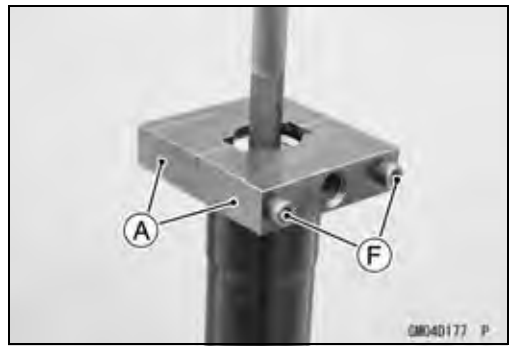

- Set the fork spring compressor [A], front fork [B], protector and suitable jack.
- Lift up the suitable jack until the piston rod nut comes out.

  Special Tool - Fork Spring Compressor: 57001-1771

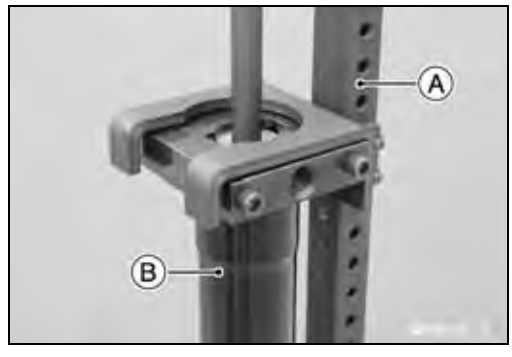

Front Fork

- Hold up the fork piston rod puller.
- Insert the fork spring stopper [A] between the piston rod nut [B] and the holder [C] while holding up the fork piston rod puller [D].

  Special Tool - Fork Spring Stopper: 57001-1374
- Remove the fork piston rod puller.

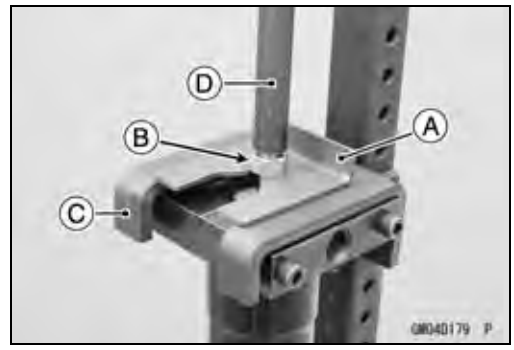

- Install the rebound damping adjuster rod [A].

- Check the distance between the bottom end [A] of the top plug and rebound damping adjuster [B] with a pair of vernier caliper.
  18 mm (0.71 in.) [C]

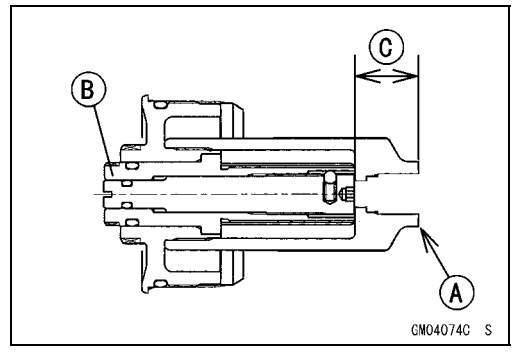

- Replace the O-ring [A] on the top plug [B] with a new one.
- Apply grease to the new O-ring.
- Install the top plug on the piston rod, and screw it.
- Holding the top plug with a wrench, tighten the piston rod nut [C] against the top plug.

○Place a plastic bag over the top plug to protect the top plug.

Torque - Piston Rod Nuts: 15 N·m (1.5 kgf·m, 11 ft·lb)

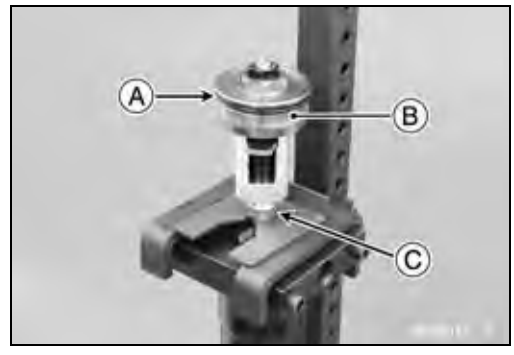

- Remove the fork spring stopper.
- Align the stoppers [A] of the top plug [B] with the grooves [C] of the clamp [D], and down the suitable jack.
- Remove the front fork from the fork spring compressor.
- Raise the outer tube and screw the top plug into it.
- Install the front fork (see Front Fork Installation).
- Adjust the spring preload (see Spring Preload Adjustment).
- Adjust the rebound damping force (see Rebound Damping Force Adjustment).

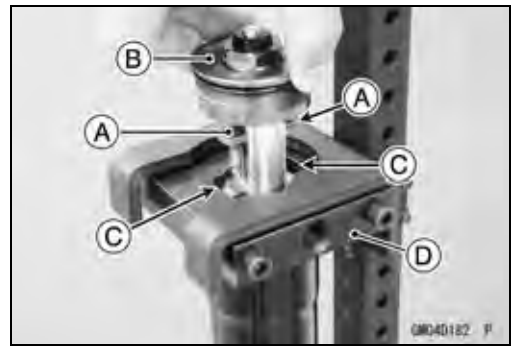

Front Fork

If using the spring compressor (57001-1587).

● Install the clamps [A] as shown.

NOTE

○*Set the clamps so that the cutout [B] of the upper side does not touch the tongue shape of stopper, pull up the outer tube [C] to hold it by the clamps, and then tighten the two bolts [D]. The outer tube is used as a guide.*

Special Tools - Fork Spring Compressor: 57001-1540
Fork Spring Compressor: 57001-1587

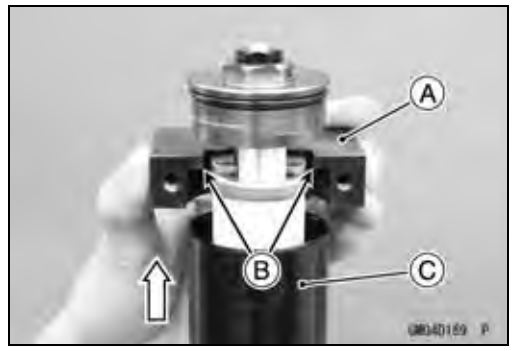

● Install the holders [E] to the clamps as shown.

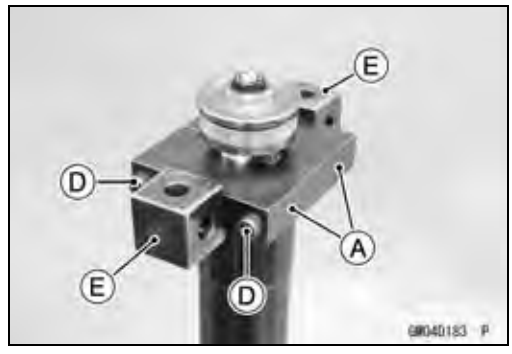

● Insert the holder bar [A] into the axle hole of the front fork [B].

○Position the bar left and right and evenly.

Special Tool - Bar: 57001-1751 (For Left Fork Leg)

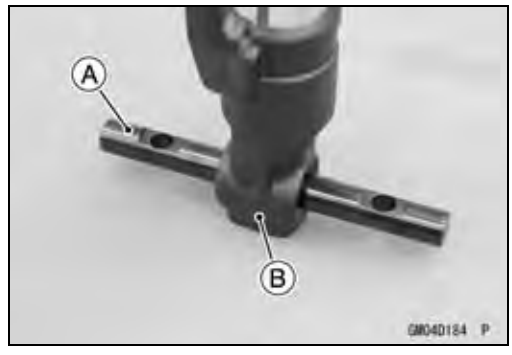

● Insert the compression shaft [A] and install the nut [B].

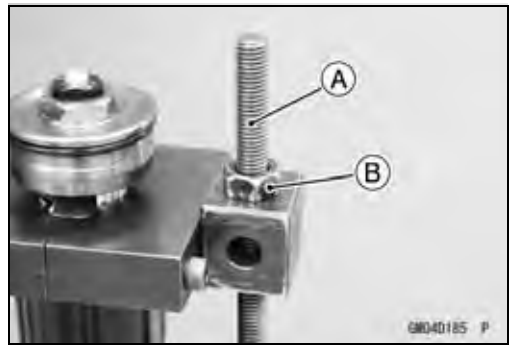

● Insert the lower end of the compression shaft [A] into the hole [B] of the holder bar.

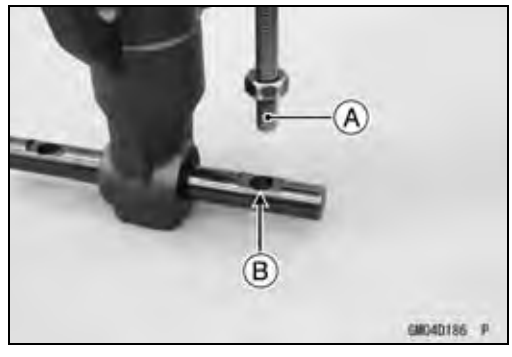

Front Fork

● Screw the adjust nut [A] onto the compression shaft as shown.
About 30 mm (1.2 in.) [B]
● Screw the locknut [C].
● Set the other side compression shaft same process.

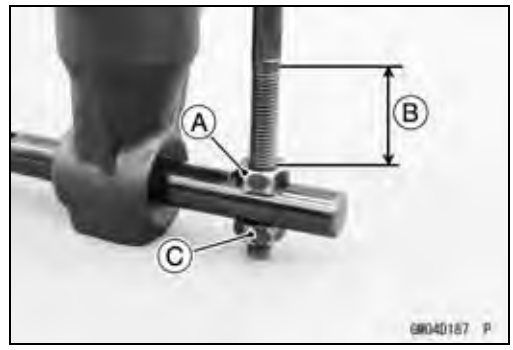

● Screw in the nuts [A] until the piston rod nut [B] comes out.
○Hold up the top plug [C] while screwing in the nut.

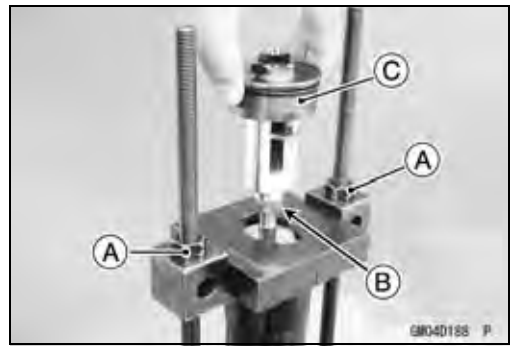

● Insert the fork spring stopper [A] between the piston rod nut [B] and the clamp [C] while holding up the top plug [D].
Special Tool - Fork Spring Stopper: 57001-1374

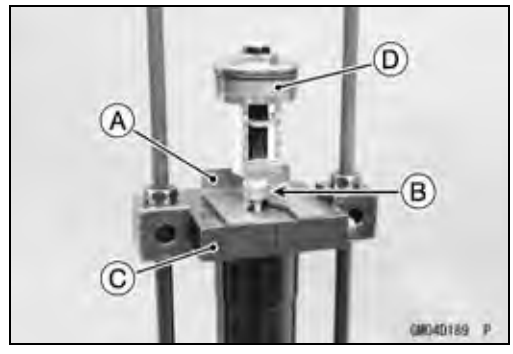

● Holding the piston rod nut with a wrench [A], remove the top plug [B] from the piston rod.
○Place a plastic bag over the top plug to protect the top plug.

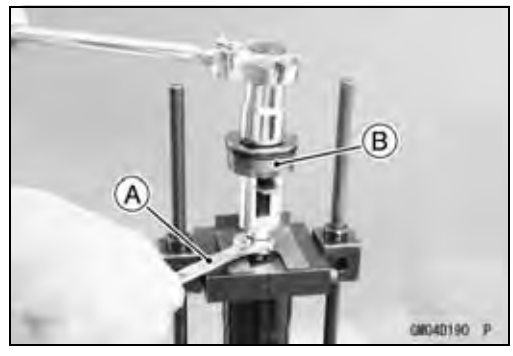

● Remove the fork spring compressor from the front fork.
● Remove:
Washer [A]
Collar [B]
Rebound Damping Adjuster Rod [C]
Fork Spring [D]

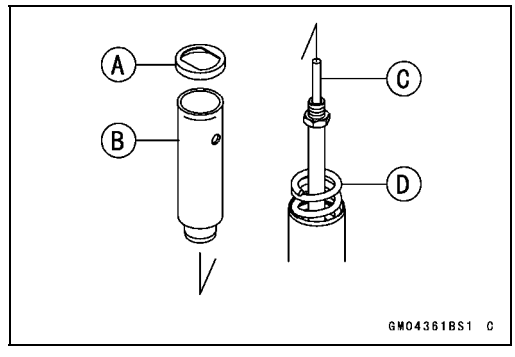

Front Fork

● Screw the rod nut [A] onto the piston rod [B] as shown.
14 mm (0.55 in.) or more [C]

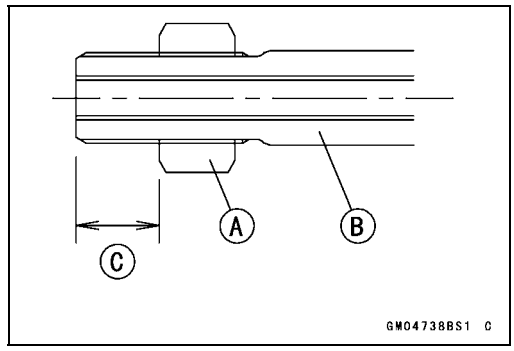

● Drain the fork oil into a suitable container.
○Using the piston rod puller [A], pump the piston rod [B] up and down at least ten times to expel the oil from the fork.

Special Tool - Fork Piston Rod Puller, M12 × 1.25: 57001 -1289

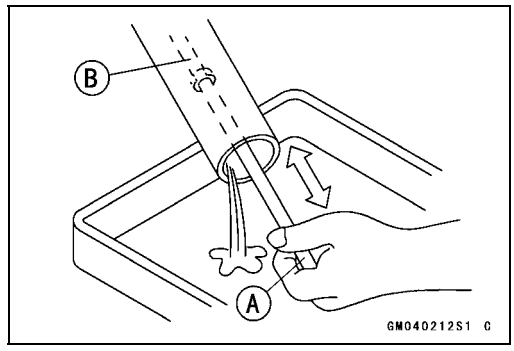

● Hold the fork tube upright, press the inner tube [A] and the piston rod all the way down.
● Pour in the type and amount of fork oil specified.

Suspension Oil - KHL15-10 (1 L): 44091-0004
KHL15-10 (4 L): 44091-0013

Amount:

When changing oil: Approx. 370 mL (12.7 US oz.)

After disassembly and completely dry:

434 ±4 mL (14.7 ±0.14 US oz.)

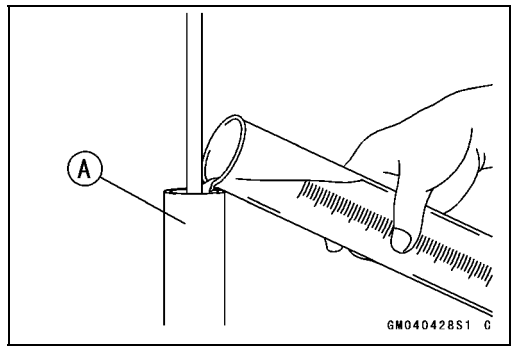

★If necessary, measure the oil level as follows.
○Hold the inner tube vertically in a vise.
○Using the piston rod puller [A], move the piston rod [B] up and down more than ten times in order to expel all the air from the fork oil.

Special Tool - Fork Piston Rod Puller, M12 × 1.25: 57001 -1289

○Remove the piston rod puller.
○Wait until the oil level settles.
○With the fork fully compressed and the piston rod fully pushed in, insert a tape measure or rod into the inner tube, and measure the distance from the top of the outer tube to the oil.

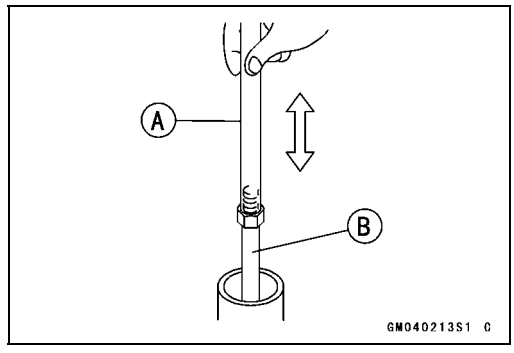

Front Fork

Oil Level (fully compressed, without spring)
Standard: 99 ±2 mm (3.9 ±0.08 in.) (from the top of the outer tube)

NOTE

○*Fork oil lever may also be measured using the fork oil level gauge.*

Special Tool - Fork Oil Level Gauge [A]: 57001-1290

○With the fork fully compressed and without fork spring, insert the gauge tube into the inner tube [B] and position the stopper across the top end [C] of the outer tube [D].
○Set the gauge stopper [E] so that its lower side shows the oil level distance specified [F].
○Pull the handle slowly to pump out the excess oil until the oil no longer comes out.
★If no oil is pumped out, there is insufficient oil in the inner tube. Pour in enough oil, then pump out the excess oil as shown above.

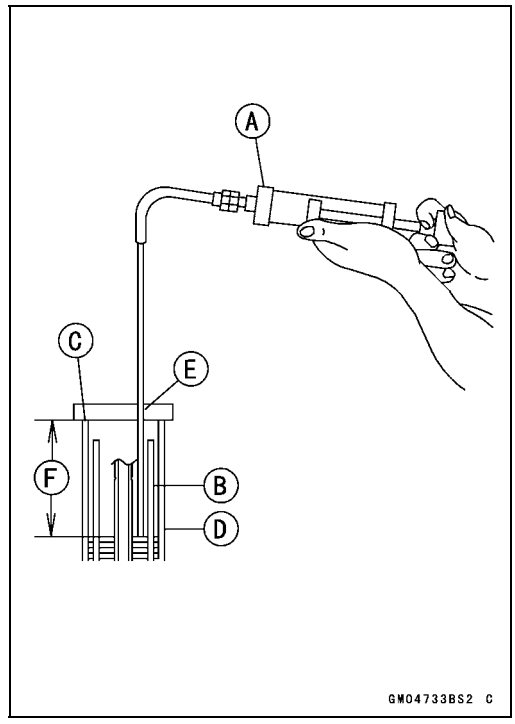

● Screw the fork piston rod puller onto the end of the piston rod.

Special Tool - Fork Piston Rod Puller, M12 × 1.25: 57001 -1289

● Pull the puller up above the outer tube top.
● Install the fork spring [A] with the smaller end [B] facing upward.

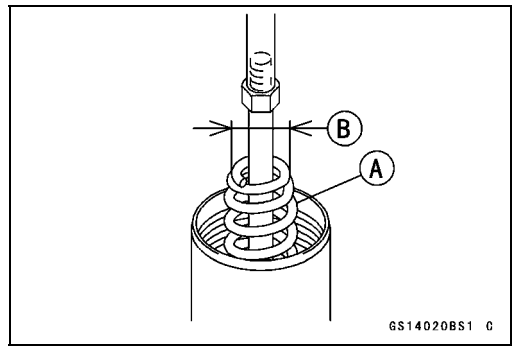

● Install the collar [A] so that the cut side [B] faces downward.
● Install the washer [C] on the collar.

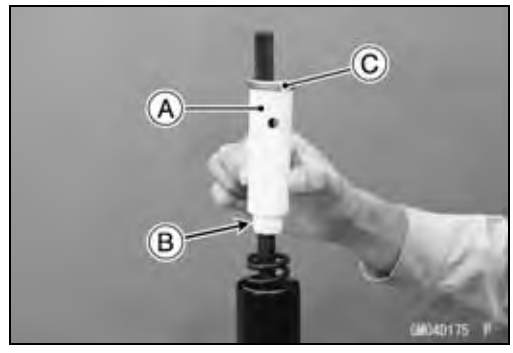

Front Fork

● Install the clamps [A] as shown.

Special Tools - Fork Spring Compressor: 57001-1540
Fork Spring Compressor: 57001-1587

NOTE

○*Set the clamps so that the cutouts [B] do not fit the hole [C] of the washer [D], pull up the outer tube [E] to hold it by the clamps, and then tighten the two bolts [F]. The outer tube is used as a guide.*

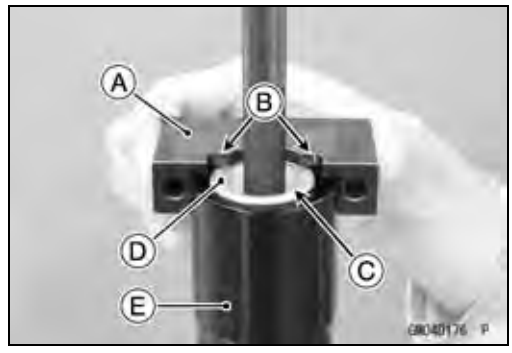

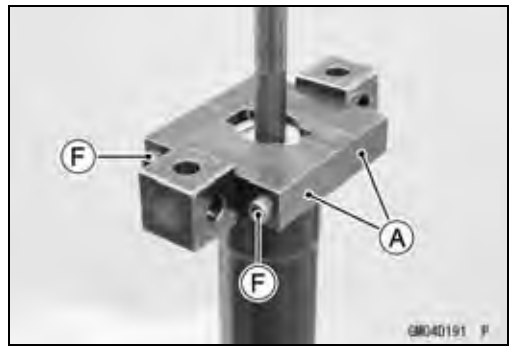

● Set the holder bar [A] and compression shafts [B].

Special Tool - Bar: 57001-1751 (For Left Fork Leg)

● Screw in the fork compressor nut come out the piston rod nut.

○Hold up the fork piston rod puller while screwing in the nut.

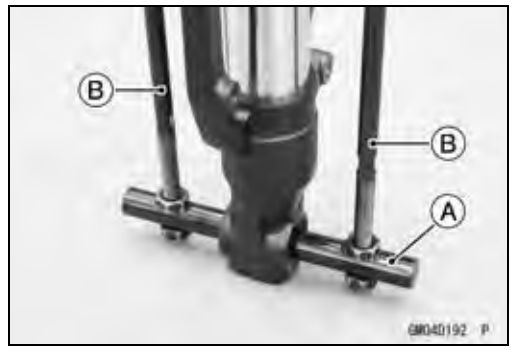

● Insert the fork spring stopper [A] between the piston rod nut [B] and the clamp [C] while holding up the fork piston rod puller [D].

Special Tool - Fork Spring Stopper: 57001-1374

● Remove the fork piston rod puller.

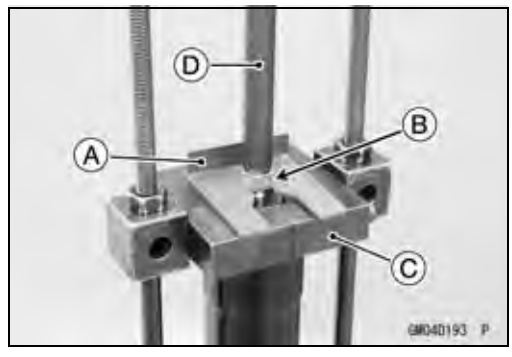

● Install the rebound damping adjuster rod [A].

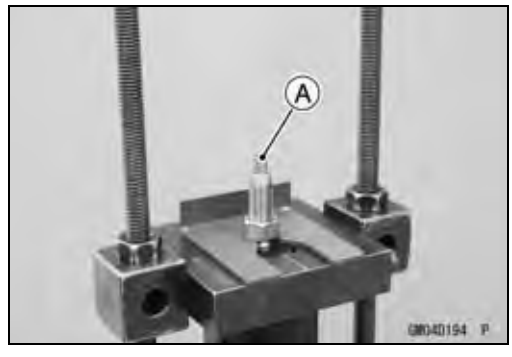

Front Fork

● Check the distance between the bottom end [A] of the top plug and rebound damping adjuster [B] with a pair of vernier caliper.
18 mm (0.71 in.) [C]

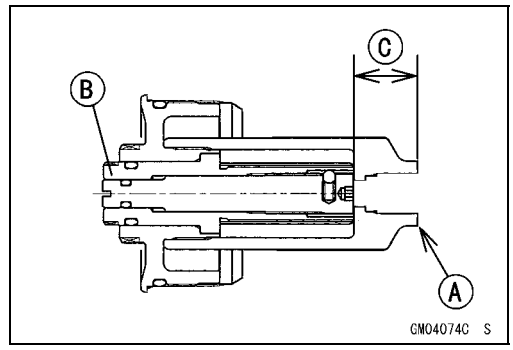

● Replace the O-ring [A] on the top plug [B] with a new one.
● Apply grease to the new O-ring.
● Install the top plug on the piston rod, and screw it.
● Holding the top plug with a wrench, tighten the piston rod nut [C] against the top plug.
○Place a plastic bag over the top plug to protect the top plug.

Torque - Piston Rod Nuts: 15 N·m (1.5 kgf·m, 11 ft·lb)

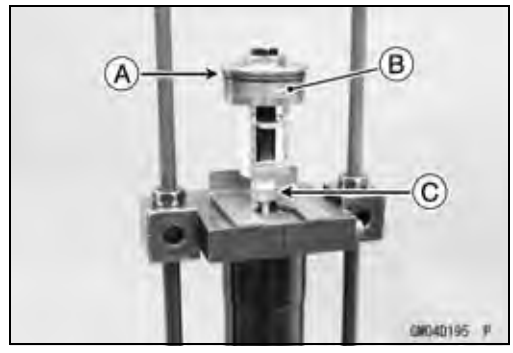

● Remove the fork spring stopper.
● Align the stoppers [A] of the top plug [B] with the grooves [C] of the clamp [D], and loosen the fork spring compressor nut.
● Remove the fork spring compressor and clamps.
● Raise the outer tube and screw the top plug into it.
● Install the front fork (see Front Fork Installation).
● Adjust the spring preload (see Spring Preload Adjustment).
● Adjust the rebound damping force (see Rebound Damping Force Adjustment).

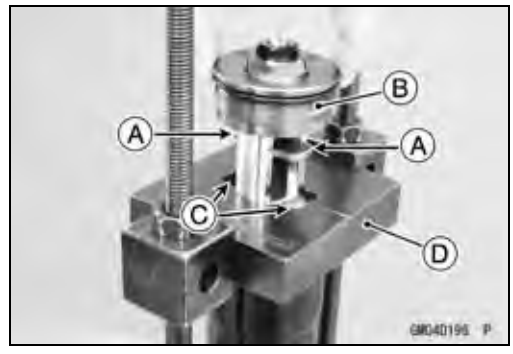

Right Front Fork
● Remove the front fork (see Front Fork Removal).
● Hold the inner tube lower end in a vice.
● Place a plastic bag over the top plug to protect the top plug.
● Unscrew the top plug [A] out of the outer tube.

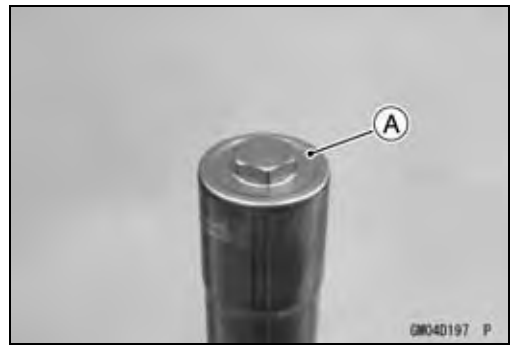

● Holding the top plug [A] with a wrench [B], loosen the piston rod rubber nut [C].
○Place a plastic bag over the top plug to protect the top plug.

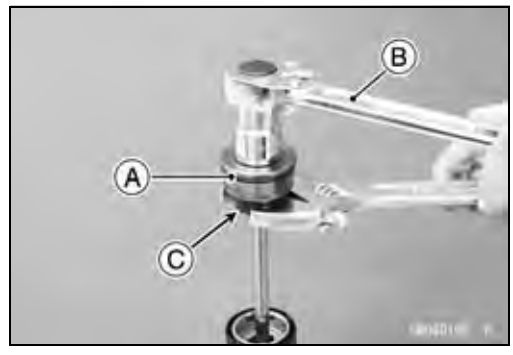

Front Fork

● Using the fork piston rod stopper holder [A], remove the piston rod assy stopper [B].

Special Tool - Fork Piston Rod Stopper Holder: 5700-1789

NOTE

○*Install the fork piston rod stopper holder so that the long side [C] faces upward.*

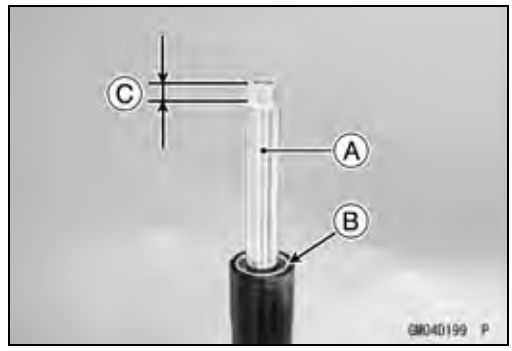

● Remove:
Piston Rod Assy [A]
Fork Spring [B]
Spacer [C]

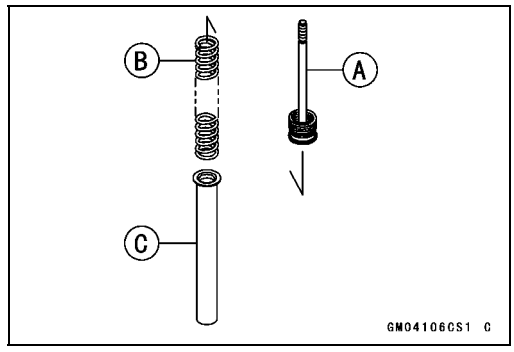

● Drain the fork oil into a suitable container [A].
○Pump the outer tube up and down at least ten times to expel the oil from the fork.

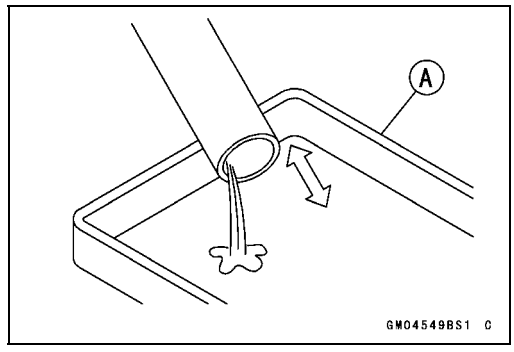

● Install the spacer [A] with the flat surface [B] facing upward.

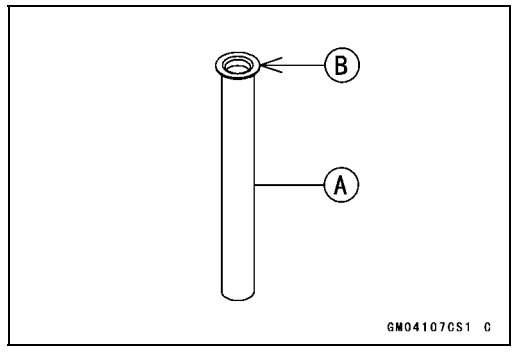

● Hold the fork tube upright, press the outer tube [A].
● Pour in the type and amount of fork oil specified.

Suspension Oil - KHL15-10 (1 L): 44091-0004
KHL15-10 (4 L): 44091-0013

Amount:

When changing oil: Approx. 440 mL (14.9 US oz.)

After disassembly and completely dry:
515 ±4 mL (17.4 ±0.14 US oz.)

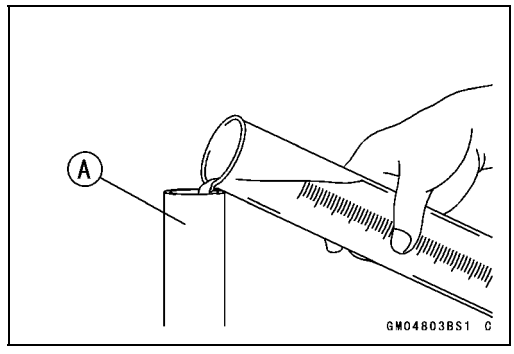

Front Fork

● Measure the oil level as follows.
○Hold the inner tube vertically in a vise.
○Move the inner tube up and down more than ten times in order to expel all the air from the fork oil.
○Wait until the oil level settles.
○With the fork fully compressed, insert a tape measure or rod into the inner tube, and measure the distance from the top of the outer tube to the oil.

Oil Level (fully compressed, without spring)
Standard: 99 ±2 mm (3.9 ±0.08 in.) (from the top of the outer tube)

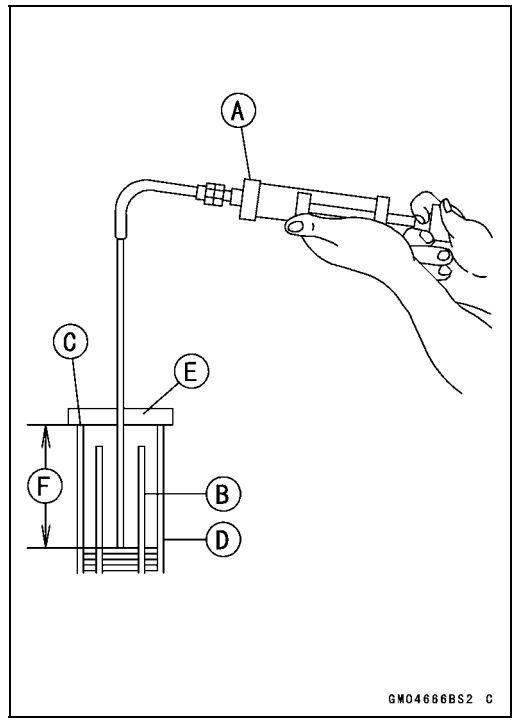

NOTE

○*Fork oil level may also be measured using the fork oil level gauge.*

Special Tool - Fork Oil Level Gauge [A]: 57001-1290

○With the fork fully compressed and without fork spring, insert the gauge tube into the inner tube [B] and position the stopper across the top end [C] of the outer tube [D].
○Set the gauge stopper [E] so that its lower side shows the oil level distance specified [F].
○Pull the handle slowly to pump out the excess oil until the oil no longer comes out.
★If no oil is pumped out, there is insufficient oil in the inner tube. Pour in enough oil, then pump out the excess oil as shown above.

● Insert the holder bar [A] into the axle hole of the front fork [B].
○Position the bar left and right and evenly.

Special Tool - Fork Spring Compressor: 57001-1587

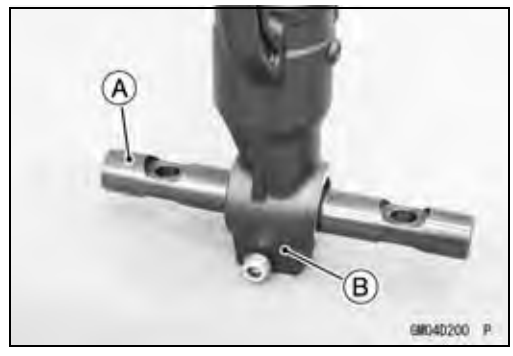

● Insert the lower end of the compression shaft [A] into the hole [B] of the holder bar.

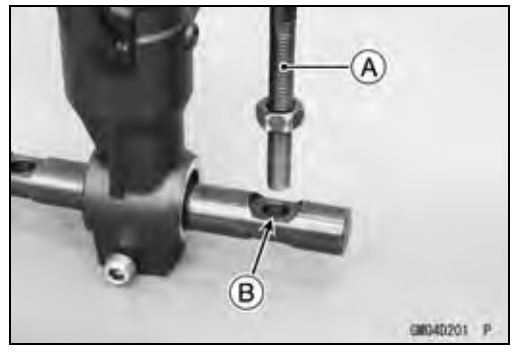

Front Fork

- Screw the adjust nut [A] onto the compression shaft as shown.
  About 40 mm (1.6 in.) [B]
- Screw the locknut [C].
- Set the other side compression shaft same process.

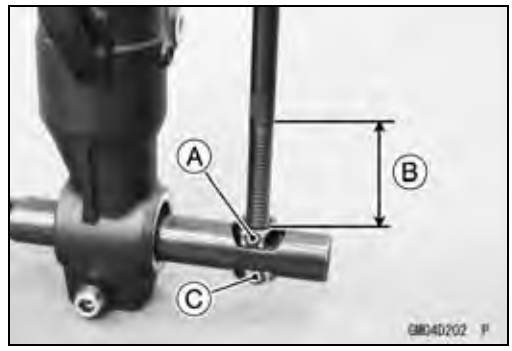

- Install the fork spring [A] with the smaller end [B] facing upward.

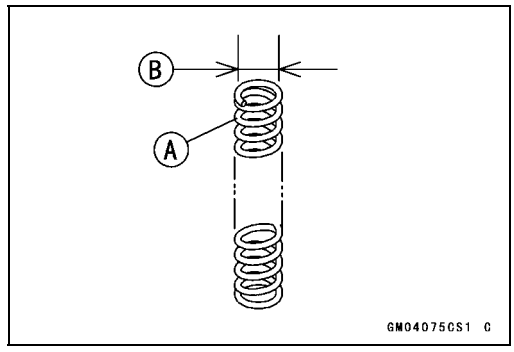

- Install:
  Piston Rod Assy [A]
  Piston Rod Assy Stopper [B]
- Screw the top plug [C].

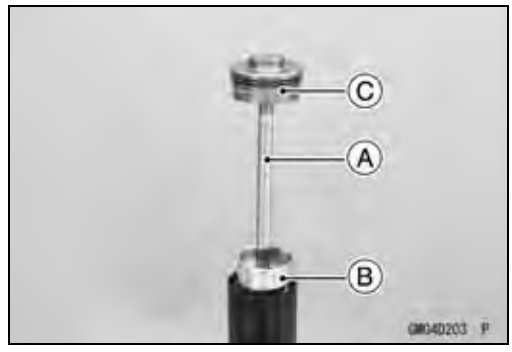

- Set the clamps [A] as shown.
  Special Tool - Fork Spring Compressor: 57001-1540
- Tighten the two bolts [B].
- Install the holders [C] to the clamps as shown.
  Special Tool - Fork Spring Compressor: 57001-1587

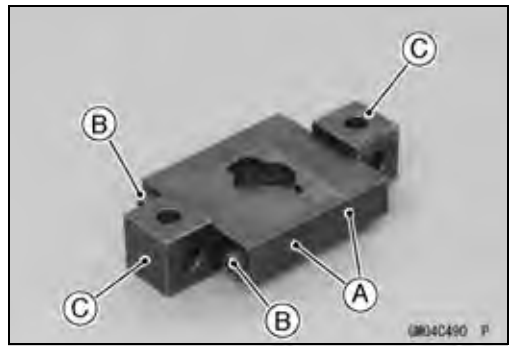

- Set the clamps [A] and compression shafts [B].

Front Fork

- Screw the nuts [A] onto the compression shafts [B] as shown.
  About 15 mm (0.59 in.) [C]
- Screw the piston rod assy stopper [D].
- Remove the fork spring compressor from the front fork.
- Remove the top plug.

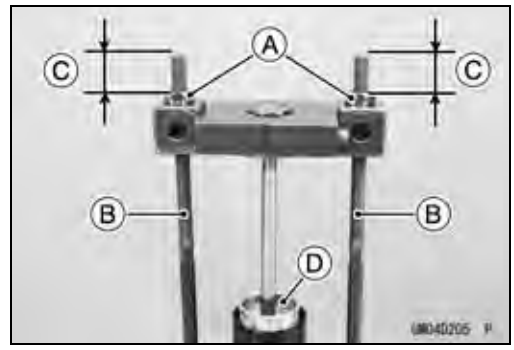

- Hold the inner tube lower end in a vice.
- Using the fork piston rod stopper holder [A], tighten the piston rod assy stopper [B] securely.

Special Tool - Fork Piston Rod Stopper Holder: 5700-1789

NOTE

○*Install the fork piston rod stopper holder so that the long side [C] faces upward.*

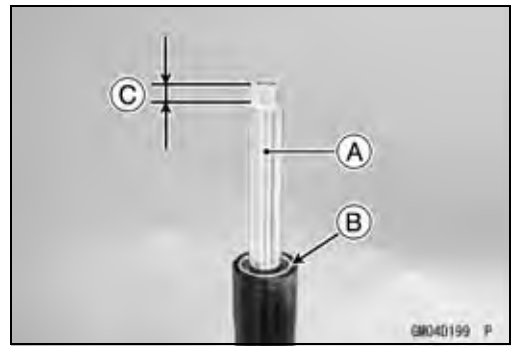

- Replace the O-ring [A] on the top plug [B] with a new one.
- Apply grease to the new O-ring.
- Screw on the piston rod rubber nut [C] fully to the piston rod [D].

○Screw the piston rod rubber nut with the flat surface [E] facing upward.

- Screw in the top plug stopped onto the piston rod.

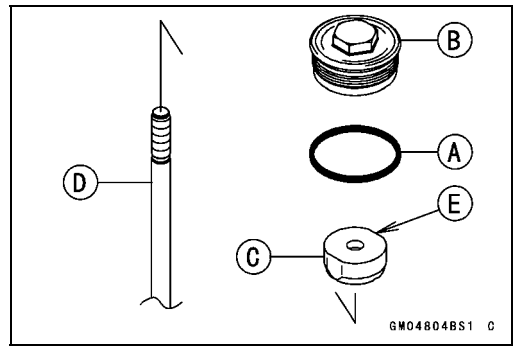

- Holding the top plug [A] with a wrench [B], tighten the piston rod rubber nut [C] against the top plug.

○Place the plastic bag over the top plug to protect the top plug.

Torque - Piston Rod Rubber Nut: 15 N·m (1.5 kgf·m, 11 ft·lb)

- Rise the outer tube and screw the top plug into it.
- Install the front fork (see Front Fork Installation).

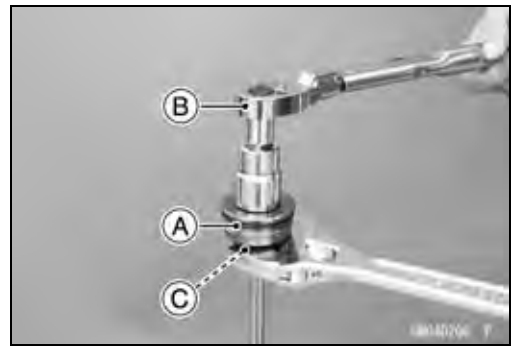

Front Fork Disassembly

- Remove the front fork (see Front Fork Removal).
- Drain the fork oil (see Fork Oil Change).

Front Fork

Left Front Fork

- Hold the inner tube lower end in a vise.
- Screw the fork piston rod puller [A] onto the end of the piston rod.

Special Tool - Fork Piston Rod Puller, M12 ×1.25 : 57001 -1289

- Screw the piston rod nut [B] until it touches the piston rod puller.
- Holding the piston rod nut with a wrench, remove the front fork bottom Allen bolt [C] and gasket.

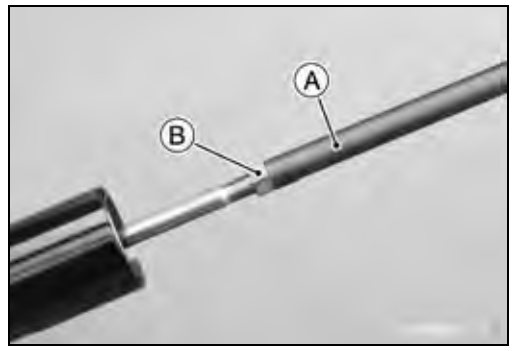

- Remove the cylinder unit [A] from the inner tube.

○Do not disassemble the cylinder unit.

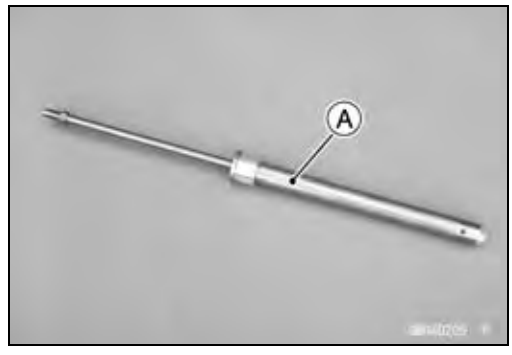

- Separate the inner tube from the outer tube as follows.

○Slide up the dust seal [A].

○Remove the retaining ring [B] from the outer tube.

○Holding the outer tube [A] by hand, pull the inner tube [B] several times to pull out the outer tube.

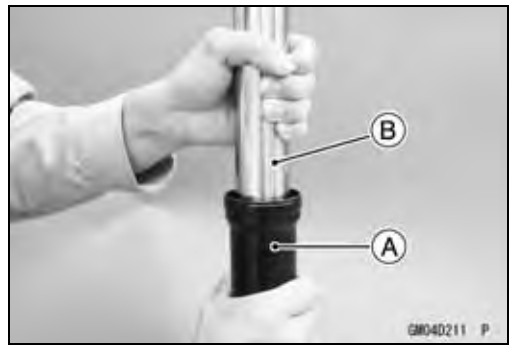

Front Fork

● Remove the following parts from the inner tube.
Inner Tube Guide Busing [A]
Outer Tube Guide Busing [B]
Washer [C]
Oil Seal [D]
Retaining Ring [E]
Dust Seal [F]

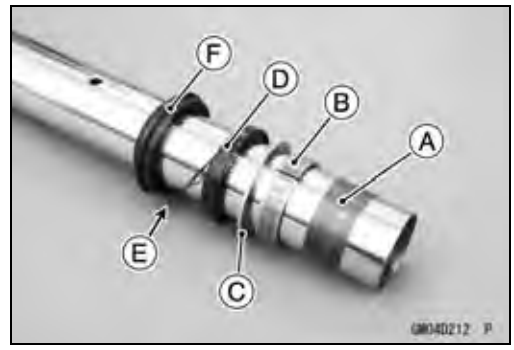

Front Fork Assembly

● Replace the following parts with new one.
Oil Seal [A]
Outer Tube Guide Bushing [B]
Inner Tube Guide Bushing [C]
Dust Seal [D]
Retaining Ring [E]
Bottom Allen Bolt Gasket (Left Front Fork Only)
● Install the following parts onto the inner tube.
Dust Seal
Retaining Ring
Oil Seal
Washer [F]
Outer Tube Guide Bushing
Inner Tube Guide Bushing

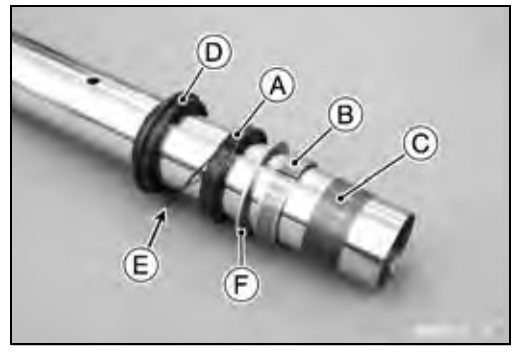

● Insert the inner tube to the outer tube.
● Fit the new outer tube guide bushing [A] into the outer tube.

NOTE

○*When assembling the new outer tube guide bushing, hold the washer against the new outer tube guide bushing and tap the washer with the fork oil seal driver [B] until it stops.*

Special Tools - Fork Oil Seal Driver, ϕ41: 57001-1288
or Fork Oil Seal Driver Weight, ϕ26 ~ϕ46: 57001-1795
Fork Oil Seal Driver Attachment, ϕ36 ~ϕ46: 57001-1798

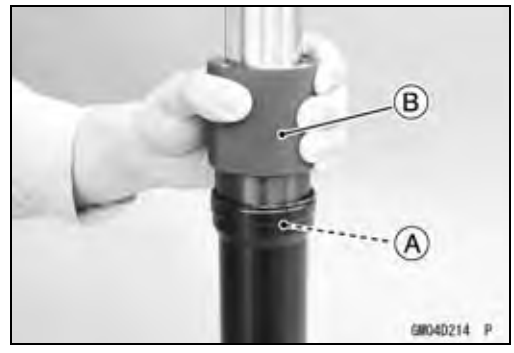

● Install the oil seal by using the fork oil seal driver.

Special Tools - Fork Oil Seal Driver, ϕ41: 57001-1288
or Fork Oil Seal Driver Weight, ϕ26 ~ϕ46: 57001-1795
Fork Oil Seal Driver Attachment, ϕ36 ~ϕ46: 57001-1798

● Install the retaining ring and dust seal into the outer tube.

Front Fork

Left Front Fork

- Hold the inner tube lower end in a vise.
- Insert the cylinder unit into the inner tube.
- Screw the fork piston rod puller [A] onto the end of the piston rod.

Special Tool - Fork Piston Rod Puller, M12 ×1.25 : 57001 -1289

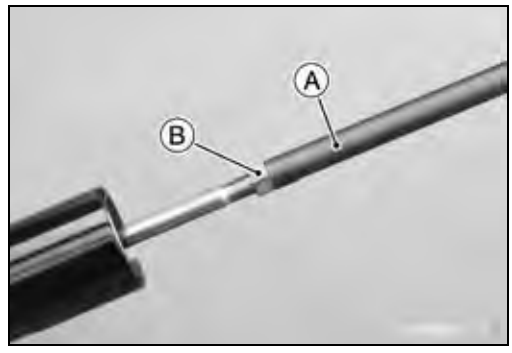

- Screw the piston rod nut [B] until it touches the piston rod puller.
- Apply non-permanent locking agent to the threads of the front fork bottom Allen bolt [C].
- Holding the piston rod nut with a wrench, and tighten the front fork bottom Allen bolt.

Torque - Front Fork Bottom Allen Bolt: 23 N·m (2.3 kgf·m, 17 ft·lb)

- Pour in the specified type of oil (see Fork Oil Change).

Inner Tube, Outer Tube Inspection

- Visually inspect the inner tube [A].

★If there is any damage, replace the inner tube. Since damage to the inner tube damages the oil seal and dust seal, replace the oil seal and dust seal whenever the inner tube is replaced.

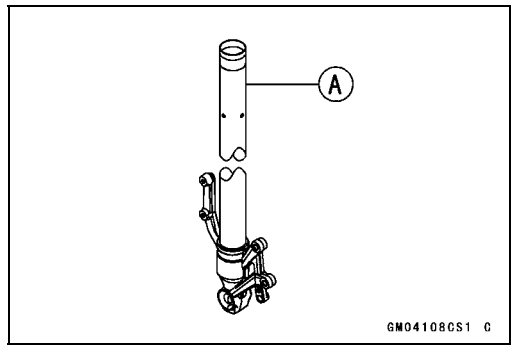

NOTICE
If the inner tube is badly bent or creased, replace it. Excessive bending, followed by subsequent straightening, can weaken the inner tube.

- Temporarily assemble the inner tube [A] and outer tube [B], and pump [C] them back and forth manually to check for smooth operation.

★If you feel binding or catching, the inner and outer tubes must be replaced.

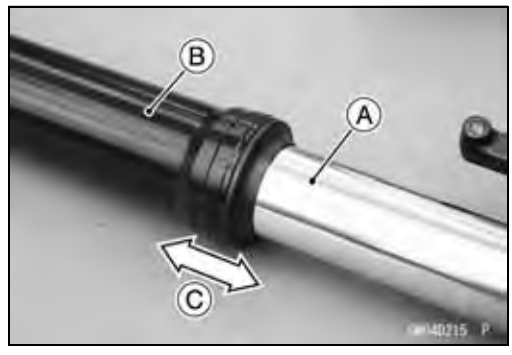

⚠ WARNING
A straightened inner or outer fork tube may fall in use, possibly causing an accident resulting in serious injury or death. Replace a badly bent or damaged inner or outer tube and inspect the other tube carefully before reusing it.

Front Fork

Dust Seal Inspection

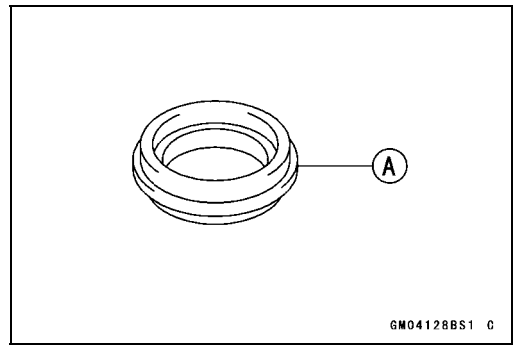

- Inspect the dust seal [A] for any signs of deterioration or damage.

★Replace it if necessary.

Spring Tension Inspection

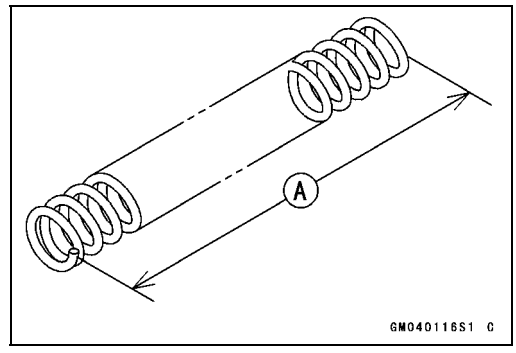

- Since a spring becomes shorter as it weakens, check its free length [A] to determine its condition.

★If the spring of either fork leg is shorter than the service limit, it must be replaced. If the length of a replacement spring and that of the remaining spring vary greatly, the remaining spring should also be replaced in order to keep the fork legs balanced for motorcycle stability.

Spring Free Length

Standard: 279.9 mm (11.02 in.)

Service Limit: 275 mm (10.8 in.)

Rear Shock Absorber

Rebound Damping Force Adjustment

- To adjust the rebound damping force, turn the rebound damping adjuster [A] to the desired position.

○The standard adjuster setting is the **1 1/4 turns out** from the fully clockwise position.

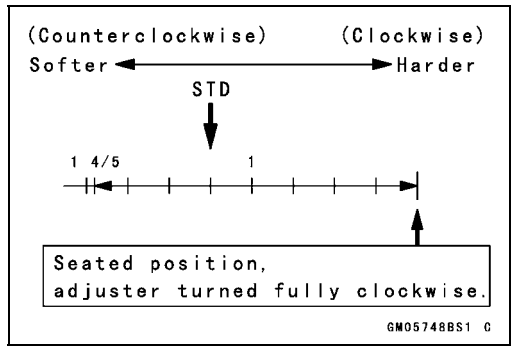

Rebound Damping Force Adjustment

Adjuster Position	Damping Force	Setting	Load	Road	Speed
1 4/5 turns out	Weak	Soft	Light	Good	Low
↑	↑	↑	↑	↑	↑
↓	↓	↓	↓	↓	↓
0	Strong	Hard	Heavy	Bad	High

Spring Preload Adjustment

- Remove the rear shock absorber from the frame (see Rear Shock Absorber Removal).
- Loosen the locknut and turn out the adjusting nut to free the spring.

Special Tool - Hook Wrench T = 3.2 R37: 57001-1539

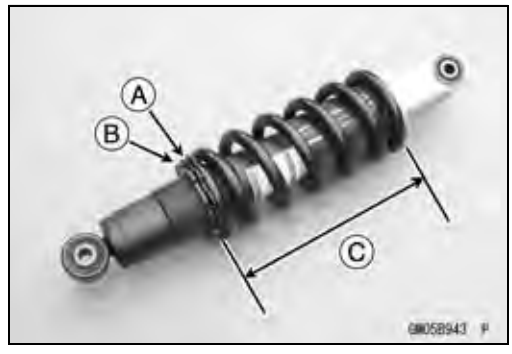

- To adjust the spring preload, turn in the adjusting nut [A] to the desired position and tighten the locknut [B].

Spring Length [C]

Spring Preload Setting

Standard: **Spring length 199.6 mm (7.86 in.)**

Usable Range: **Spring length 190.5 ~ 200.5 mm (7.500 ~ 7.894 in.)**

Spring Adjustment

Adjuster Position	Damping Force	Setting	Load	Road	Speed
200.5 mm (7.894 in.)	Weak	Soft	Light	Good	Low
↑	↑	↑	↑	↑	↑
↓	↓	↓	↓	↓	↓
190.5 mm (7.500 in.)	Strong	Hard	Heavy	Bad	High

Rear Shock Absorber Removal

- Support the front of the motorcycle with the stand.

⚠ WARNING

When raising the rear wheel off the ground and removing part(s) from the motorcycle, be sure to support the front of the motorcycle, or the motorcycle may fall over. It could cause an accident and injury.

Rear Shock Absorber

- Remove:
  Right Frame Cover (see Frame Cover Removal in the Frame chapter)
- Loosen:
  Upper Rear Shock Absorber Bolt [A] and Nut

- Loosen:
  Lower Rear Shock Absorber Bolt [A] and Nut

- Raise the rear wheel off the ground with webbing slings [A].
○Hang the webbing slings to the rear footpeg brackets as shown.
○Protect the vehicle using suitable clothes [B].
- Remove:
  Upper Rear Shock Absorber Bolt, Nut and Washer
  Lower Rear Shock Absorber Bolt and Nut
  Rear Shock Absorber

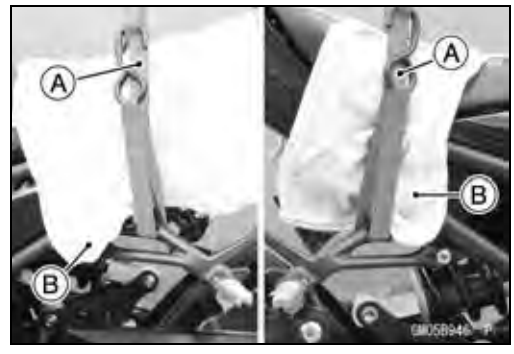

Rear Shock Absorber Installation

- Replace the rear shock absorber nuts with new ones.
- Install the rear shock absorber so that the rebound damping force adjuster faces rightward.
- Install the rear shock absorber bolts, nuts and washer temporarily.
- Remove the webbing slings.

NOTE

○*When tightening the rear shock absorber bolt and nut, lower the rear wheel to the ground.*

- Tighten the lower rear shock absorber nut first, and then the upper rear shock absorber bolt.

Torque - Lower Rear Shock Absorber Nut: 44 N·m (4.5 kgf·m, 32 ft·lb)
Upper Rear Shock Absorber Bolt: 44 N·m (4.5 kgf·m, 32 ft·lb)

- Install the right frame cover (see Frame Cover Installation in the Frame chapter).

Rear Shock Absorber

Rear Shock Absorber Inspection

- Remove the rear shock absorber (see Rear Shock Absorber Removal).
- Visually inspect the following items.
  Oil Leakage
  Crack or Dent

★If there is any damage to the rear shock absorber, replace it.

- Visually inspect the rubber bushing.

★If it show any signs of damage, replace it.

Rear Shock Absorber Scrapping

⚠ WARNING

Since the rear shock absorber contains nitrogen gas, do not incinerate the rear shock absorber without first releasing the gas or it may explode. Before a rear shock absorber is scrapped, drill a hole at the point [A] shown to release the nitrogen gas completely. Wear safety glasses when drilling the hole, as the gas may blow out bits of drilled metal when the hole opens.

Swingarm

Swingarm Removal

- Remove:
  Frame Covers (see Frame Cover Removal in the Frame chapter)
- Loosen:
  Swingarm Pivot Shaft Nut [A]

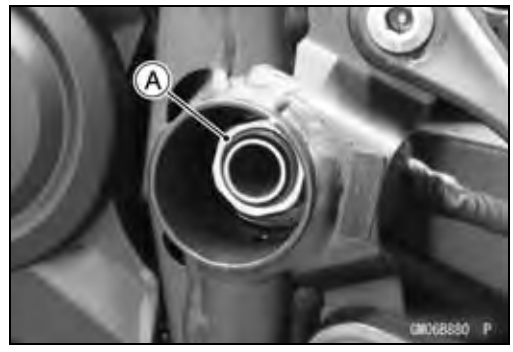

- Using the swingarm pivot nut wrench [A], loosen the swingarm pivot shaft locknut [B].

  Special Tool - Swingarm Pivot Nut Wrench: 57001-1872

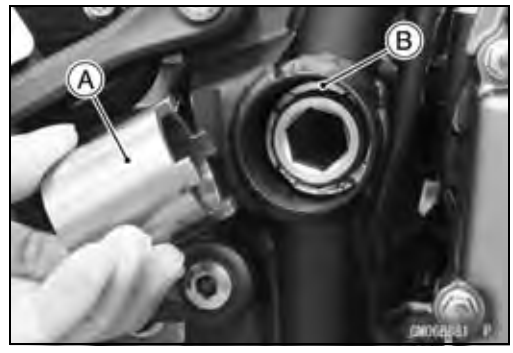

- Remove:
  Mud Guard (see Mud Guard Removal in the Frame chapter)
  Rear Wheel (see Rear Wheel Removal in the Wheels/Tires chapter)
  Rocker Arms (see Rocker Arm Removal)
  Brake Hose Clamp Bolts [A]
  Swingarm Pivot Shaft Nut

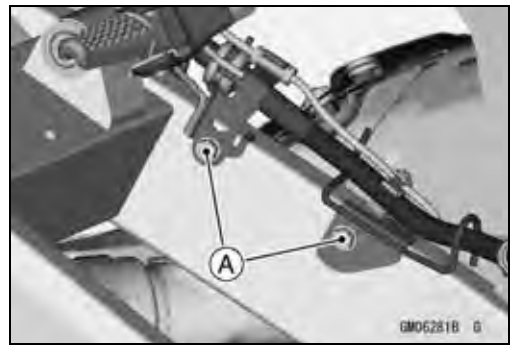

- Turn the swingarm pivot shaft [A] counterclockwise to free the swingarm pivot shaft from the collar.
- Pull out the swingarm pivot shaft to the right side and remove the swingarm.

Swingarm Installation

- Visually inspect the chain guide [A].

★Replace the chain guide if it shows any signs of abnormal wear or damage.

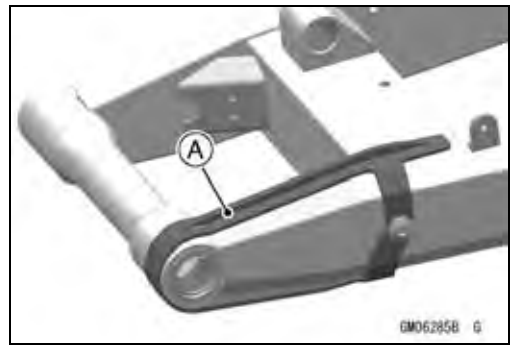

Swingarm

- Apply grease to the lips of the grease seals [A].
- Be sure to install the grease seals and sleeve to the swingarm.
- Fit the collar [B] on the grease seal of the right side.

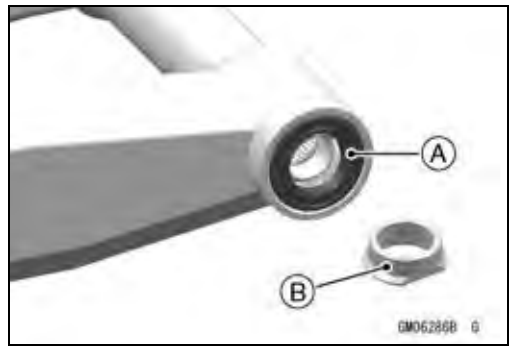

- Place the collar [A] on the stopper [B] which is the inside of the frame [C].
- Insert the swingarm pivot shaft into the frame from the right side.
- Tighten the swingarm pivot shaft until the clearance [D] between the collar and the frame come to 0 mm.
- Loosen the swingarm pivot shaft once, and tighten the swingarm pivot shaft securely.

Torque - Swingarm Pivot Shaft: 9.8 N·m (1.0 kgf·m, 87 in·lb)

- Tighten the swingarm pivot shaft locknut, using the swingarm pivot nut wrench.

Special Tool - Swingarm Pivot Nut Wrench: 57001-1872

Torque - Swingarm Pivot Shaft Locknut: 98 N·m (10 kgf·m, 72 ft·lb)

- Tighten:

Torque - Swingarm Pivot Shaft Nut: 108 N·m (11.0 kgf·m, 79.7 ft·lb)

- Move the swingarm up and down to check for abnormal friction.
- Install the removed parts (see appropriate chapters).

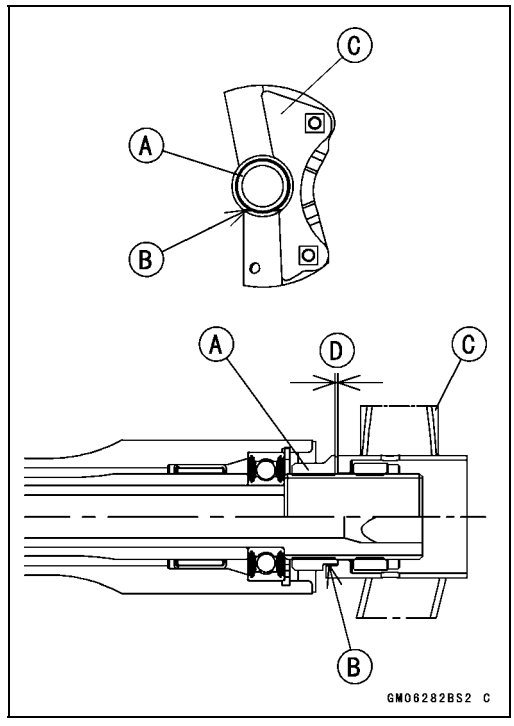

Swingarm Bearing Removal

- Remove:
  Swingarm (see Swingarm Removal)
  Collar [A]
  Grease Seals [B]
  Sleeve [C]
  Circlip [D] (Right Side)

Special Tool - Inside Circlip Pliers: 57001-143

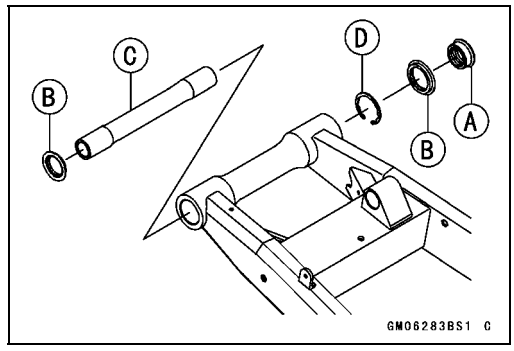

- Remove the ball bearing and needle bearings.

Special Tool - Oil Seal & Bearing Remover [A]: 57001-1058

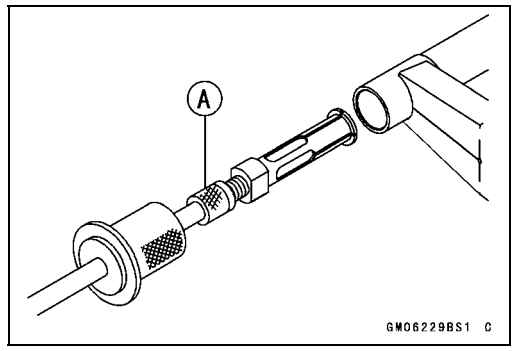

Swingarm

Swingarm Bearing Installation

● Replace the ball and needle bearings [A] with new ones.

NOTE

○*Install the ball and needle bearings so that the marked side faces out.*

● Install the needle bearings, ball bearing [B] and grease seals [C] position as shown.

○Using a suitable bearing drive and the bearing driver set.

Special Tool - Bearing Driver Set: 57001-1129

Circlip [D]
28 ±0.4 mm (1.1 ±0.02 in.) [E]
20.5 ±0.4 mm (0.81 ±0.02 in.) [F]

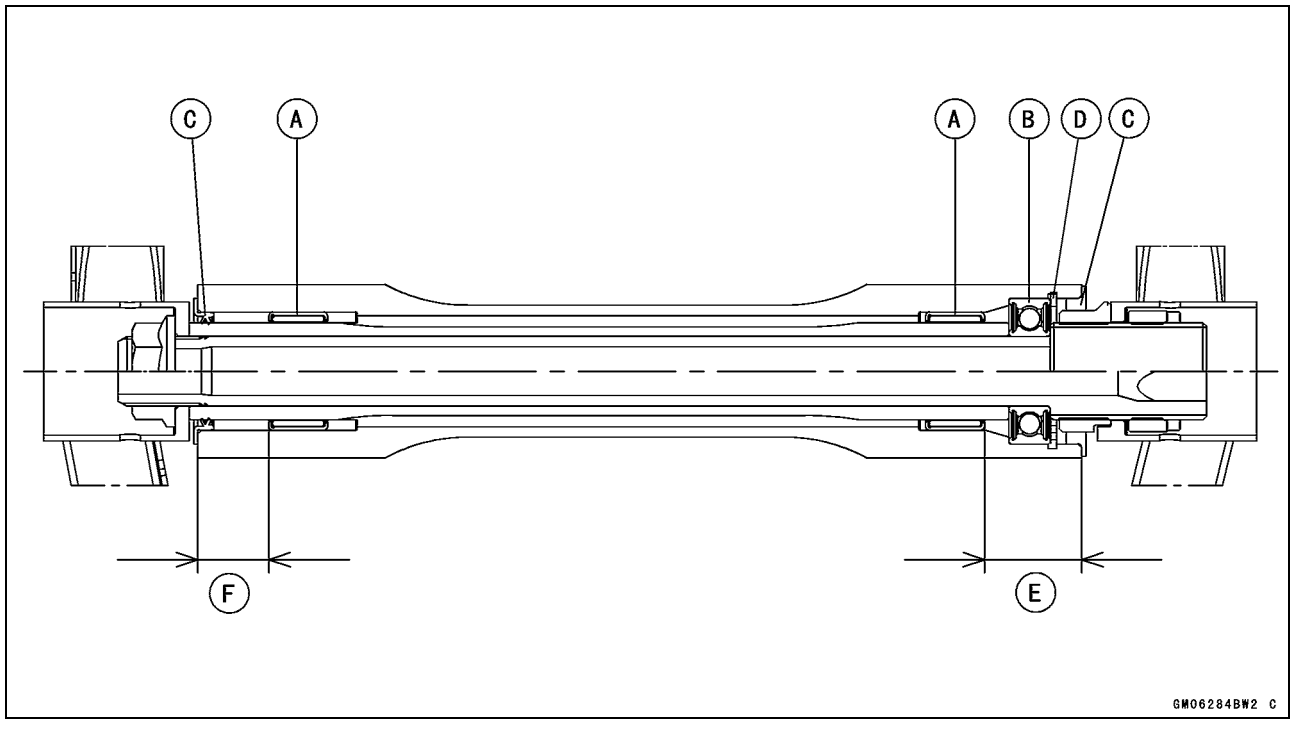

Swingarm

Swingarm Bearing, Sleeve Inspection

NOTICE
Do not remove the bearings for inspection. Removal may damage them.

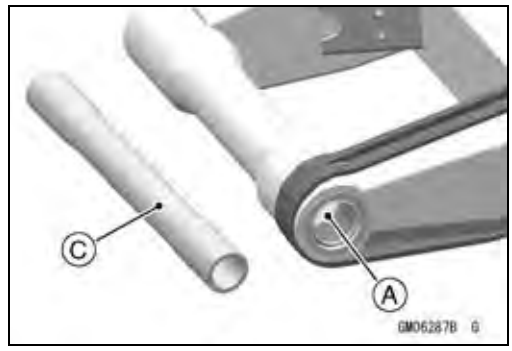

- Inspect the needle bearings [A] and ball bearing [B] installed in the swingarm.

○The rollers and ball in a bearing normally wear very little, and wear is difficult to measure. Instead of measuring, visually inspect the bearing for abrasion, discoloration, or other damage.

★If the needle bearing and sleeve [C] show any signs of abnormal wear, discoloration, or damage, replace them as a set.

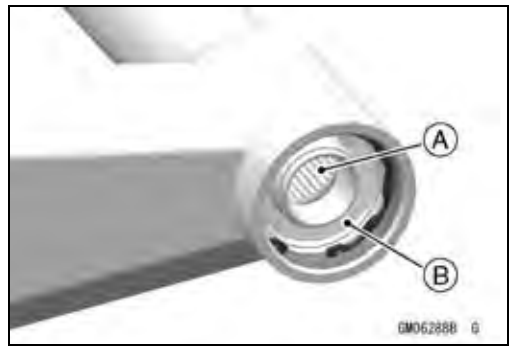

- Turn the bearing in the swingarm back and forth [A] while checking for plays, roughness, or binding.

★If bearing play, roughness, or binding is found, replace the bearing.

- Examine the bearing seal [B] for tears or leakage.

★If the seal is torn or is leaking, replace the bearing.

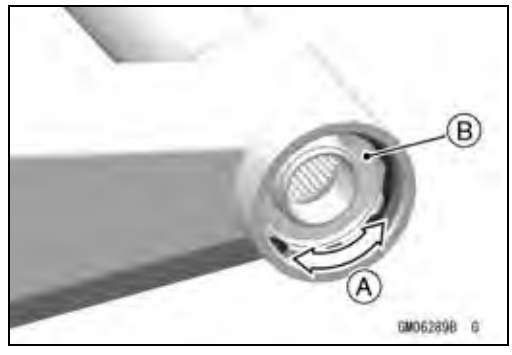

Swingarm Bearing Lubrication

NOTE

○*Since the bearings are packed with grease and sealed, lubrication is not required.*

Chain Guide Inspection

- Refer to the Chain Guide Wear Inspection in the Periodic Maintenance chapter.

Tie-Rod, Rocker Arm

Tie-Rod Removal

● Support the front of the motorcycle with the stand.

⚠ WARNING

When raising the rear wheel off the ground and removing part(s) from the motorcycle, be sure to support the front of the motorcycle, or the motorcycle may fall over. It could cause an accident and injury.

● Remove:
Right Front Footpeg Bracket Bolts [A]

● Loosen:
Tie-Rod Bolts and Nuts [A]

● Raise the rear wheel off the ground with webbing slings [A].
○Hang the webbing slings to the rear footpeg brackets as shown.
○Protect the vehicle using suitable clothes [B].
● Remove:
Tie-Rod Bolts, Nuts and Washer
Tie-Rod

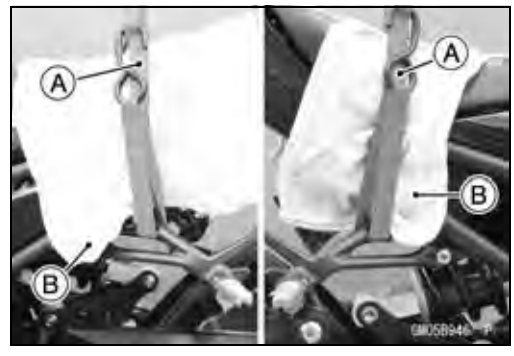

Tie-Rod Installation

● Apply grease to the inside of the grease seals.
● Replace the tie-rod nuts with new ones.
● Install the tie-rod, bolts, nuts and washer temporarily.
● Remove the webbing slings.

NOTE

○*When tightening the tie-rod nuts, lower the rear wheel to the ground.*

● Tighten the lower tie-rod nut first, and then the upper tie-rod nut.

Torque - Tie-Rod Nuts: 44 N·m (4.5 kgf·m, 32 ft·lb)

● Tighten:

Torque - Front Footpeg Bracket Bolts: 25 N·m (2.5 kgf·m, 18 ft·lb)

Tie-Rod, Rocker Arm

Rocker Arm Removal

● Support the front of the motorcycle with the stand.

⚠ WARNING

When raising the rear wheel off the ground and removing part(s) from the motorcycle, be sure to support the front of the motorcycle, or the motorcycle may fall over. It could cause an accident and injury.

● Remove:
Right Front Footpeg Bracket Bolts [A]

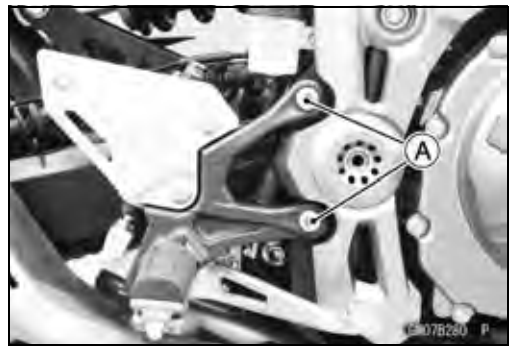

● Loosen:
Lower Rear Shock Absorber Bolt and Nut [A]
Upper Tie-Rod Bolt and Nut [B]
Rocker Arm Bolt and Nut [C]

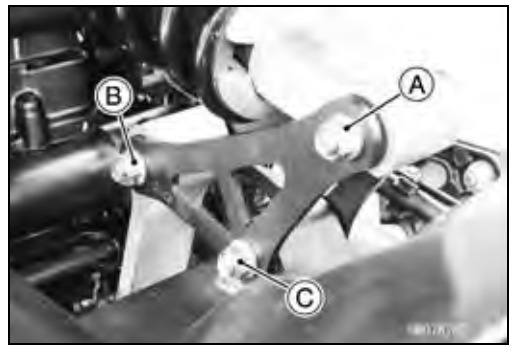

● Raise the rear wheel off the ground with webbing slings [A].
○Hang the webbing slings to the rear footpeg brackets as shown.
○Protect the vehicle using suitable clothes [B].
● Remove:
Lower Rear Shock Absorber Bolt and Nut
Upper Tie-Rod Bolt and Nut
Rocker Arm Bolt and Nut
Rocker Arms

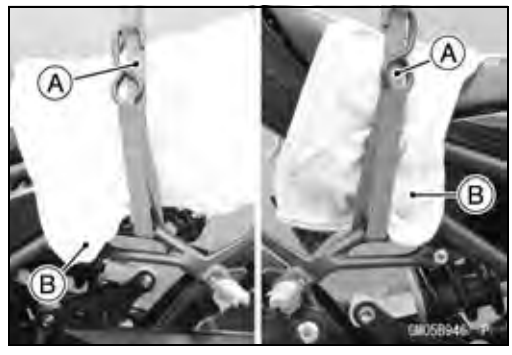

Tie-Rod, Rocker Arm

Rocker Arm Installation

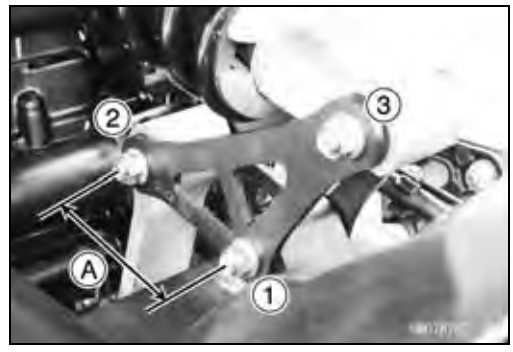

- Apply grease to the inside of the grease seals.
- Replace the following nuts with new ones.
  Lower Rear Shock Absorber Nut
  Upper Tie-Rod Nut
  Rocker Arm Nut
- Install the rocker arms so that the short side [A] faces forward.
- Install the bolts and nuts temporarily.
- Remove the webbing slings.

NOTE

○*When tightening the nuts, lower the rear wheel to the ground.*

- Tighten the rocker arm nut, upper tie-rod nut and lower rear shock absorber nut following the tightening sequence [1 ~ 3].

Torque - Rocker Arm Nut: 44 N·m (4.5 kgf·m, 32 ft·lb)
Tie-Rod Nut: 44 N·m (4.5 kgf·m, 32 ft·lb)
Lower Rear Shock Absorber Nut: 44 N·m (4.5 kgf·m, 32 ft·lb)

- Tighten:

Torque - Front Footpeg Bracket Bolts: 25 N·m (2.5 kgf·m, 18 ft·lb)

Tie-Rod and Rocker Arm Bearing Removal

- Remove:
  Tie-Rod (see Tie-Rod Removal)
  Rocker Arms (see Rocker Arm Removal)
  Swingarm [A] (see Swingarm Removal)
  Sleeves [B]
  Grease Seals [C]
- Remove the needle bearings [D], using a suitable tool.

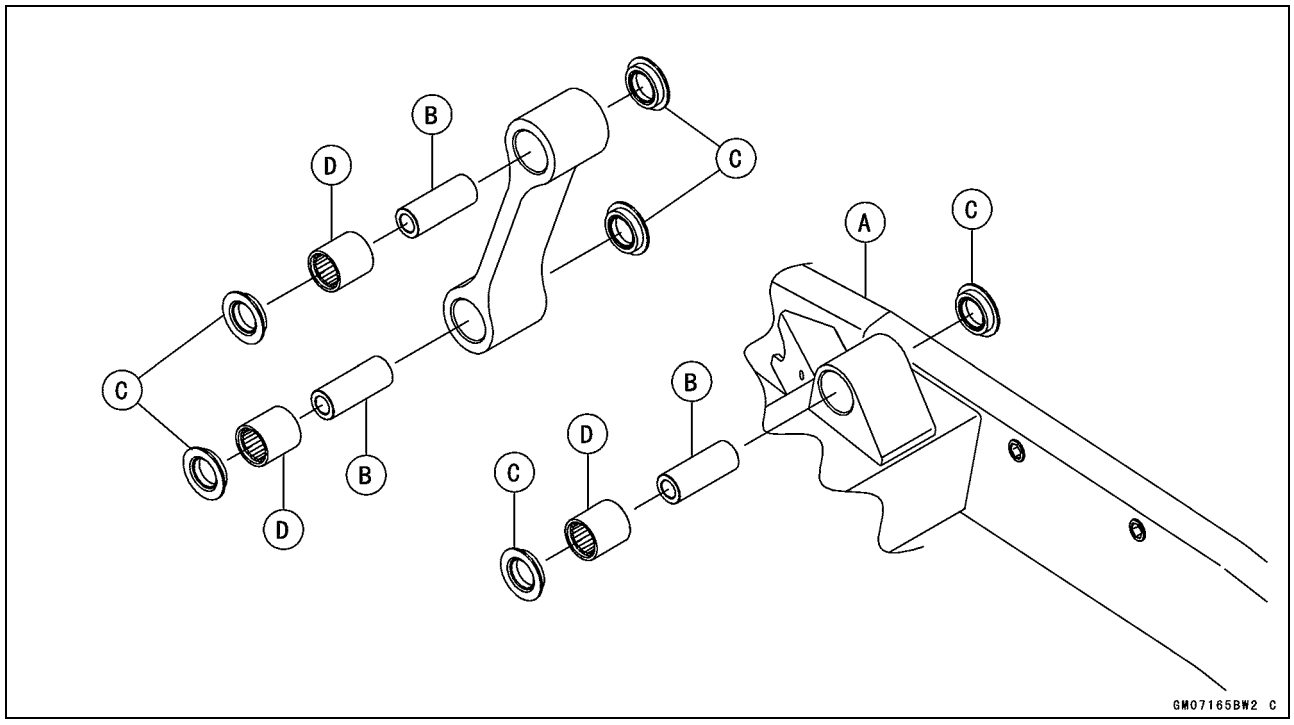

Tie-Rod, Rocker Arm

Tie-Rod and Rocker Arm Bearing Installation

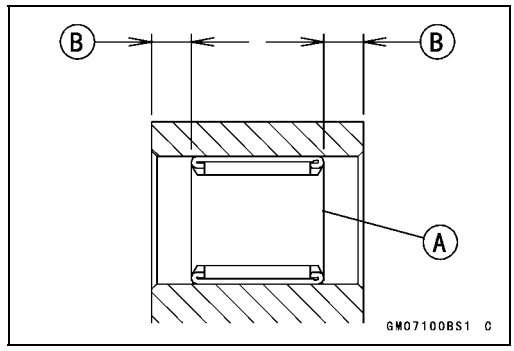

- Replace the needle bearing [A] and grease seals with new ones.
- Install the needle bearings position as shown.

○Screw the needle bearing driver into the driver holder.

○Insert the needle bearing driver into the needle bearing and press the needle bearing.

7.5 mm (0.30 in.) [B]

NOTE

○*For a bearing of inner diameter ϕ17, select the pressing side of the needle bearing driver according to its pressing depth.*

Special Tools - Bearing Driver Set: 57001-1129
Needle Bearing Driver, ϕ17/ϕ18: 57001-1609

- Apply plenty of grease to the lips of the grease seals.
- Install the grease seals.

Rocker Arm/Tie-Rod Bearing, Sleeve Inspection

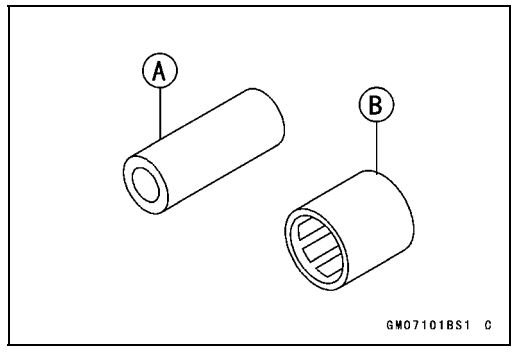

NOTICE
Do not remove the bearings for inspection. Removal may damage them.

- Visually inspect the rocker arm, or tie-rod sleeves [A] and needle bearings [B].
- The rollers in a needle bearing normally wear very little, and wear is difficult to measure. Instead of measuring, inspect the bearing for abrasion, color change, or other damage.

★If there is any doubt as to the condition of any of the needle bearings or sleeve, replace the sleeve and needle bearings as a set.

Rocker Arm/Tie-Rod Bearing Lubrication

NOTE

○*Since the bearings are packed with grease, lubrication is not required.*

Steering

Table of Contents

Exploded View 14-2
Special Tools 14-4
Steering 14-5
  Steering Inspection 14-5
  Steering Adjustment 14-5
Steering Stem 14-6
  Stem, Stem Bearing Removal 14-6
  Stem, Stem Bearing Installation 14-7
  Steering Stem Bearing Lubrication 14-9
  Steering Stem Warp Inspection 14-9
  Stem Cap Deterioration, Damage Inspection 14-10
Handlebar 14-11
  Handlebar Removal 14-11
  Handlebar Installation 14-11

Exploded View

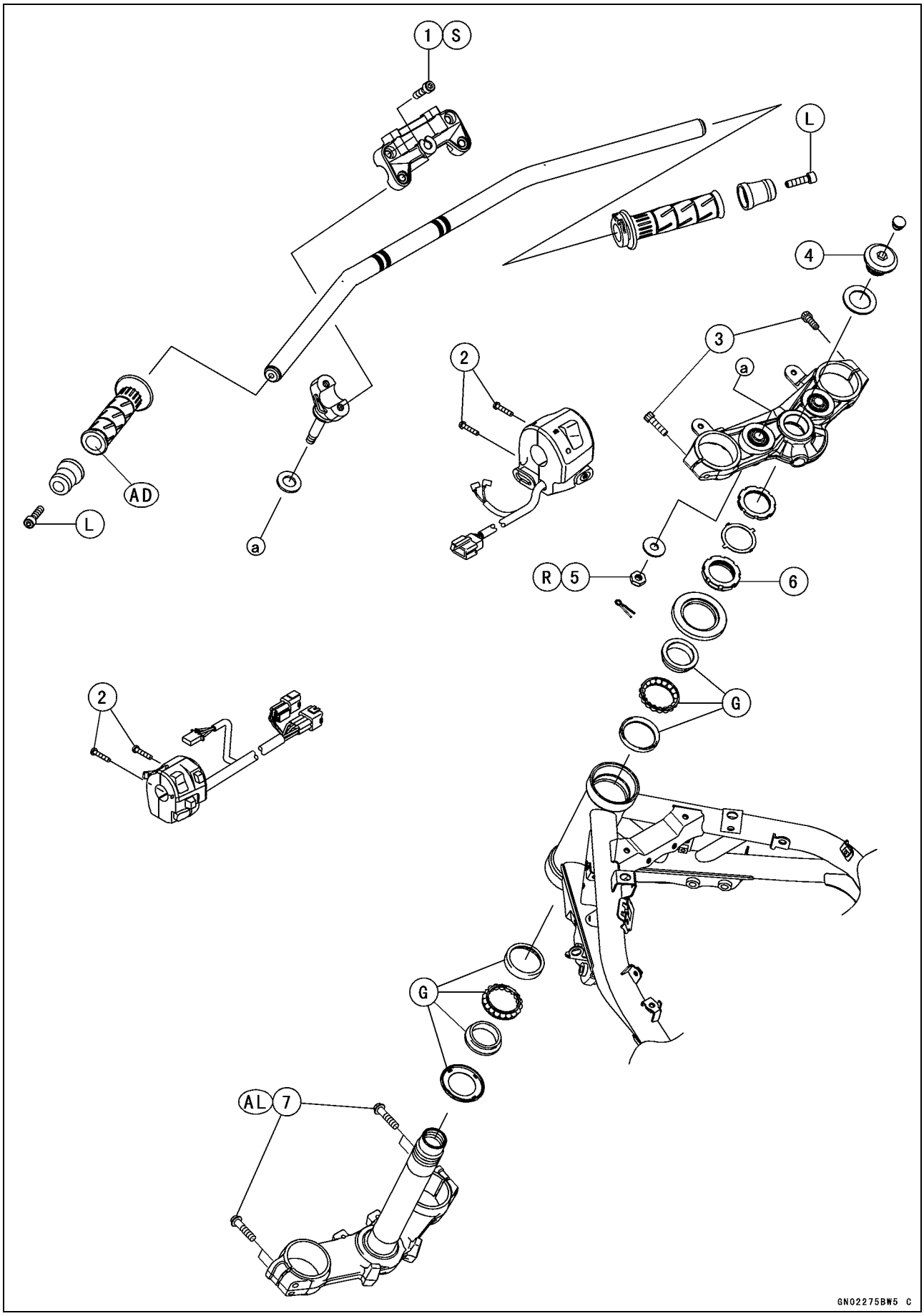

Exploded View

No.	Fastener	Torque			Remarks
		N·m	kgf·m	ft·lb	
1	Handlebar Holder Bolts	25	2.5	18	S
2	Switch Housing Screws	3.5	0.36	31 in·lb	
3	Upper Front Fork Clamp Bolts	20	2.0	15	
4	Steering Stem Head Bolt	108	11.0	79.7	
5	Lower Handlebar Holder Nuts	34	3.5	25	R
6	Steering Stem Nut	27	2.8	20	
7	Lower Front Fork Clamp Bolts	20.5	2.09	15.1	AL

AD: Apply adhesive.
AL: Tighten the two clamp bolts alternately two times to ensure even tighten torque.
G: Apply grease.
L: Apply a non-permanent locking agent.
R: Replacement Parts
S: Follow the specified tightening sequence.

Special Tools

Head Pipe Outer Race Press Shaft:
57001-1075

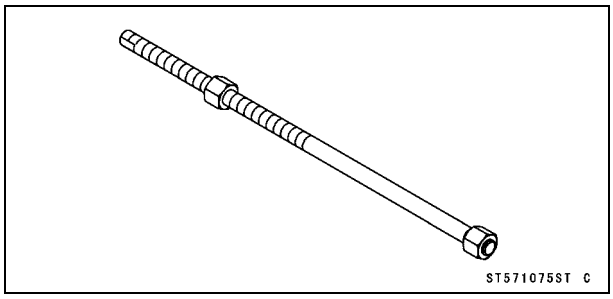

Steering Stem Bearing Driver Adapter, ϕ41.5:
57001-1345

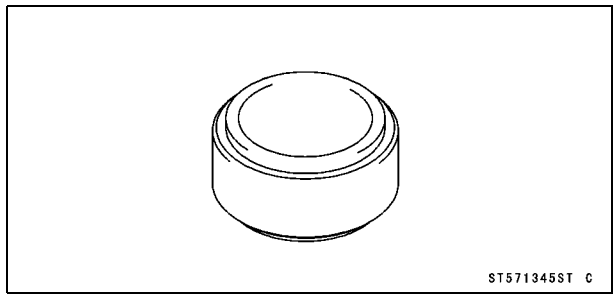

Steering Stem Nut Wrench:
57001-1100

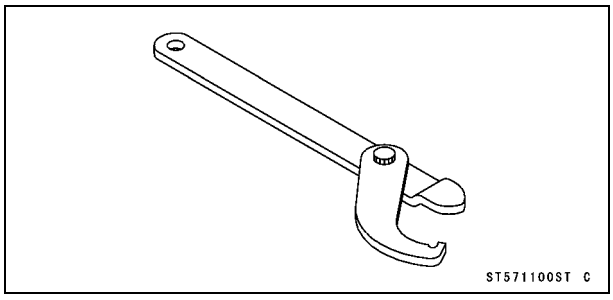

Head Pipe Outer Race Driver, ϕ55:
57001-1446

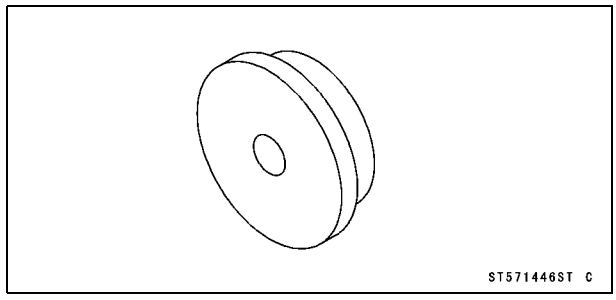

Steering Stem Bearing Driver, ϕ42.5:
57001-1344

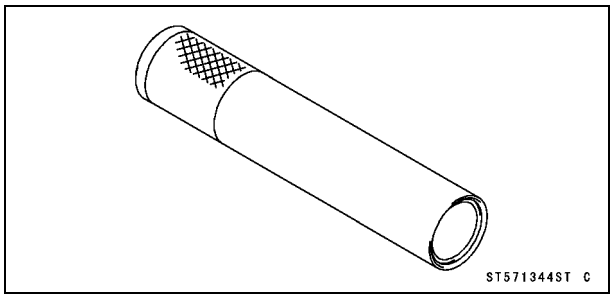

Adjustable Hook Wrench:
57001-1863

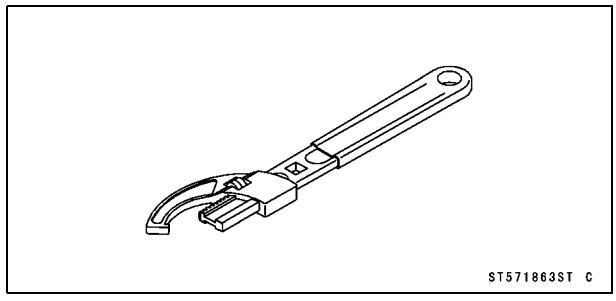

Steering

Steering Inspection

- Refer to the Steering Play Inspection in the Periodic Maintenance chapter.

Steering Adjustment

- Refer to the Steering Play Adjustment in the Periodic Maintenance chapter.

Steering Stem

Stem, Stem Bearing Removal

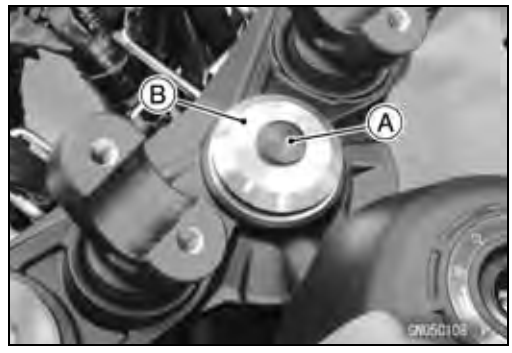

- Remove:
  Headlight Assy (see Upper Fairing Removal in the Frame chapter)
  Handlebars (see Handlebar Removal)
  Steering Stem Head Bolt Plug [A]
- Loosen the steering stem head bolt [B].

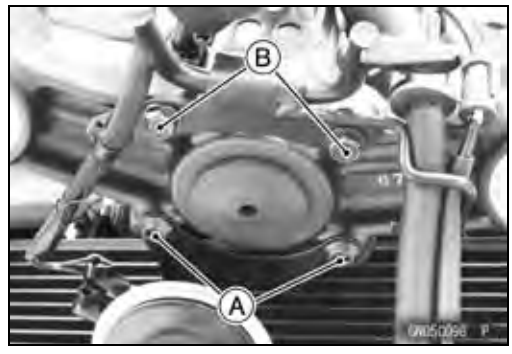

- Remove:
  Front Forks (see Front Fork Removal in the Suspension chapter)
  Horn Bolts [A]
  Headlight Bracket Bolts [B]

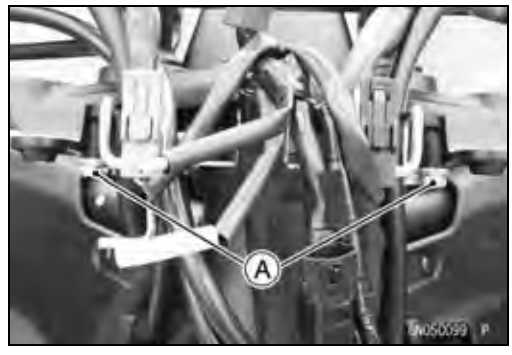

- Remove:
  Bracket Bolts [A]

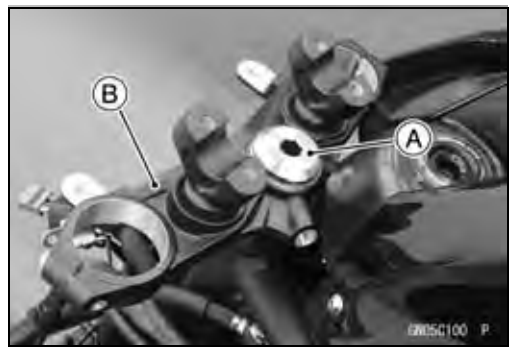

- Remove:
  Steering Stem Head Bolt [A] and Washer
  Steering Stem Head [B]

- Bend the claws [A] of claw washer straighten.
- Remove the steering stem locknut [B].

  Special Tool - Steering Stem Nut Wrench: 57001-1100

- Remove the claw washer.

Steering Stem

● Pushing up the stem base, and remove the steering stem nut [A] with stem cap [B].

Special Tool - Steering Stem Nut Wrench [C]: 57001-1100

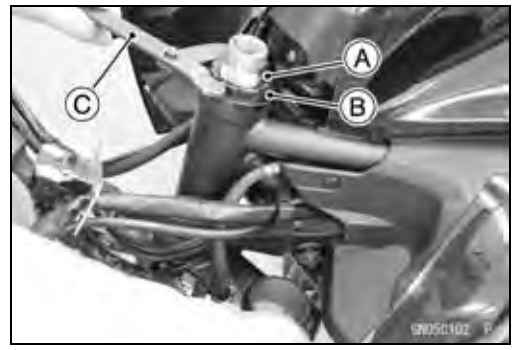

○You may remove the steering stem nut using the adjustable hook wrench [A].

Special Tool - Adjustable Hook Wrench: 57001-1863

● Remove:
Steering Stem
Upper Ball Bearing Inner Race and Ball Bearing

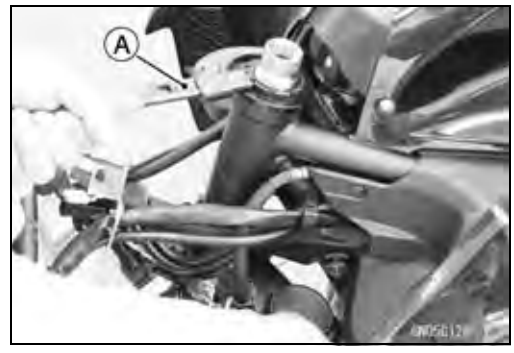

● To remove the ball bearing outer races [A] pressed into the head pipe [B], insert a bar [C] into the recesses of head pipe, and applying it to both recess alternately hammer it to drive the race out.

NOTE

○*If either steering stem bearing is damaged, it is recommended that both the upper and lower bearings (including outer races) should be replaced with new ones.*

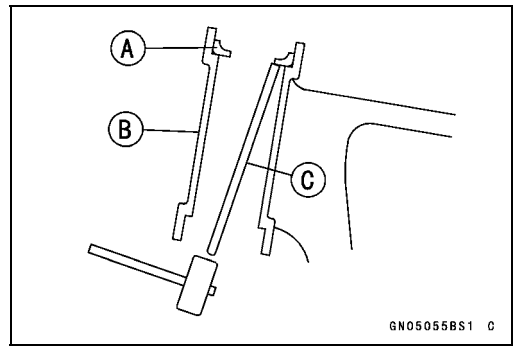

● Remove the lower ball bearing from the steering stem.
● Remove the lower ball bearing inner race (with its oil seal) [A] which is pressed onto the steering stem with a suitable commercially available chisel [B].

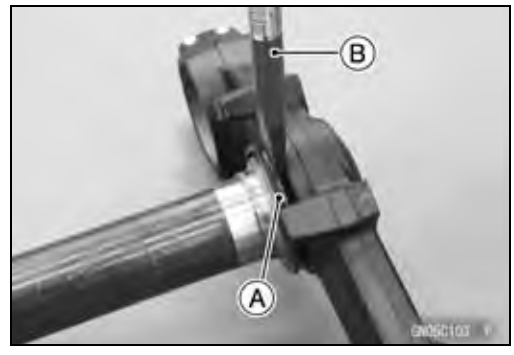

Stem, Stem Bearing Installation

● Replace the bearing outer races with new ones.
● Drive them into the head pipe at the same time.

Special Tools - Head Pipe Outer Race Press Shaft [A]: 57001-1075
Head Pipe Outer Race Driver, ϕ55 [B]: 57001-1446

● Apply grease to the outer races.

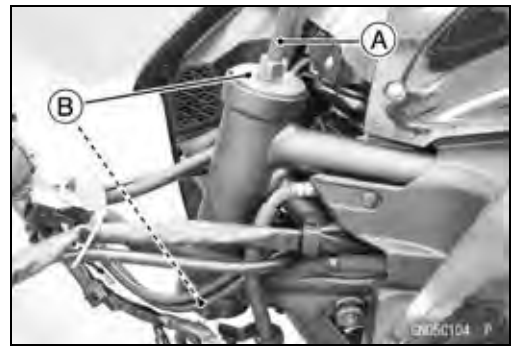

Steering Stem

● Replace the bearing inner races and oil seal with new ones.
● Apply grease to the oil seal.
● Install the oil seal [A] on the steering stem.
● Apply grease to the stem and hammer the lower ball bearing inner race [B].

Special Tools - Steering Stem Bearing Driver, ϕ42.5 [C]: 57001-1344
Steering Stem Bearing Driver Adapter, ϕ41.5 [D]: 57001-1345

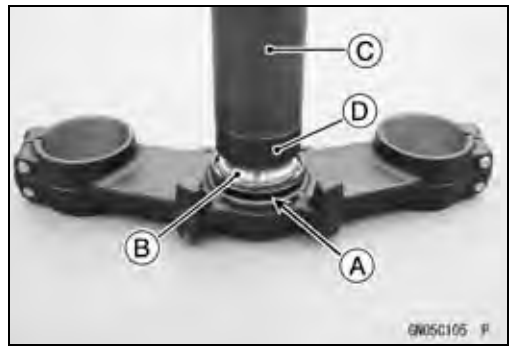

● Apply grease to the lower ball bearing [A], and install it onto the steering stem.
○The lower and upper ball bearings are identical.
● Apply grease to the upper ball bearing and inner race.

● Install the steering stem [A] through the head pipe and install the upper ball bearing [B] and inner race [C] on it.
● Install:
Stem Cap [D]
Steering Stem Nut [E]

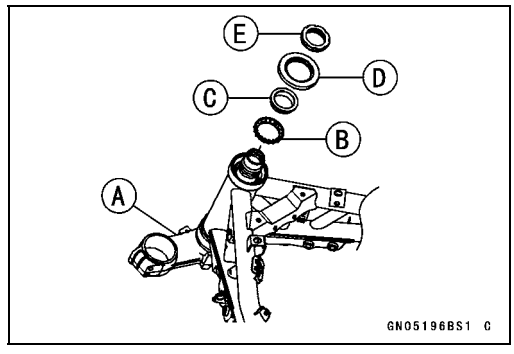

● Settle the bearings in place as follows.
○Tighten the steering stem nut with **65 N·m (6.6 kgf·m, 48 ft·lb)** of torque first, and loosen it a fraction of a turn until it turns lightly. Afterward tighten it again with specified torque using a steering stem nut wrench [A].
○Check that there is no play and the steering stem turns smoothly without rattles. If not, the steering stem bearings may be damaged.
○You may tighten the steering stem nut using the adjustable hook wrench.

Special Tools - Steering Stem Nut Wrench: 57001-1100 or Adjustable Hook Wrench: 57001-1863

Torque - Steering Stem Nut: 27 N·m (2.8 kgf·m, 20 ft·lb)

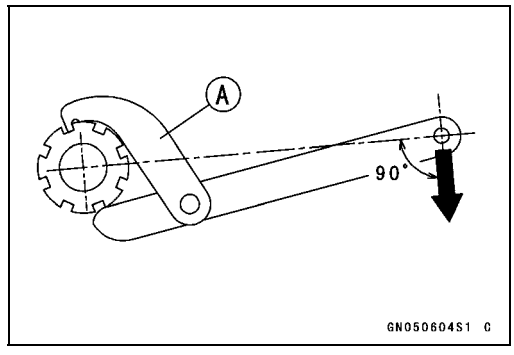

Steering Stem

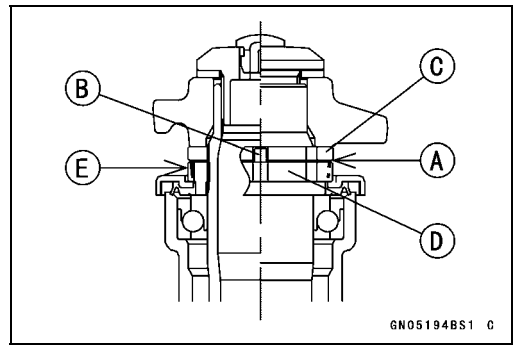

- Install the claw washer [A] so that its bent side [B] faces upward, and engage the bent claws with the grooves of stem locknut [C].
- Hand tighten the stem locknut until it touches the claw washer.
- Hand tighten the stem locknut clockwise until the claws are aligned with the grooves (ranging from 2nd to 4th) of stem nut [D], and bend the 2 claws downward [E].
- Install the stem head.
- Install the washer, and temporarily tighten the steering stem head bolt.
- Install the front forks (see Front Fork Installation in the Suspension chapter).

NOTE

○*Tighten the upper front fork clamp bolts first, next the steering stem head bolt, last the lower front fork clamp bolts.*

○*Tighten the two lower front fork clamp bolts alternately two times to ensure even tightening torque.*

Torque - Upper Front Fork Clamp Bolts: 20 N·m (2.0 kgf·m, 15 ft·lb)
Steering Stem Head Bolt: 108 N·m (11.0 kgf·m, 79.7 ft·lb)
Lower Front Fork Clamp Bolts: 20.5 N·m (2.09 kgf·m, 15.1 ft·lb)

⚠ WARNING

If the handlebars do not turn to the steering stop, they may cause an accident resulting in injury or death. Be sure the cables, harnesses and hoses are routed properly and do not interfere with handlebar movement (see Cable, Wire, and Hose Routing section in the Appendix chapter).

- Install the removed parts (see appropriate chapters).

Steering Stem Bearing Lubrication

- Refer to the Steering Stem Bearing Lubrication in the Periodic Maintenance chapter.

Steering Stem Warp Inspection

- Whenever the steering stem is removed, or if the steering can not be adjusted for smooth action, check the steering stem for straightness.

★If the steering stem [A] is bent, replace the steering stem.

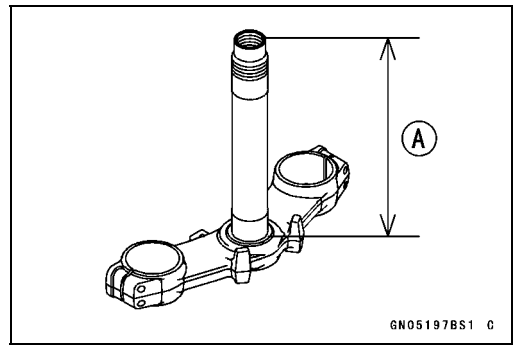

Steering Stem

Stem Cap Deterioration, Damage Inspection

★Replace the stem cap if its oil seal [A] shows damage.

Handlebar

Handlebar Removal

- Remove:
  Rear View Mirror [A] (see Rear View Mirror Removal in the Frame chapter)
  Clutch Lever Clamp Bolts [B]
  Clutch Lever Assembly [C]
  Left Switch Housing [D]
  Handlebar Weight [E]
  Handlebar Grip [F]

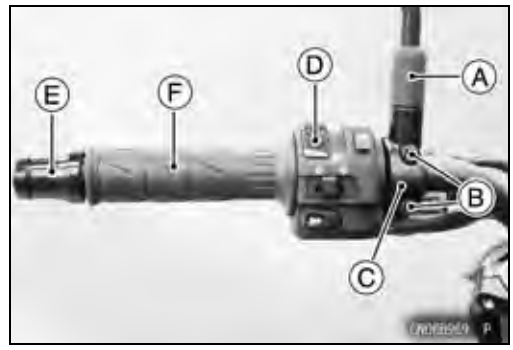

- Remove:
  Rear View Mirror [A] (see Rear View Mirror Removal in the Frame chapter)
  Front Master Cylinder [B] (see Front Master Cylinder Removal in the Brakes chapter)
  Right Switch Housing [C]
  Handlebar Weight [D]
  Throttle Grip [E]

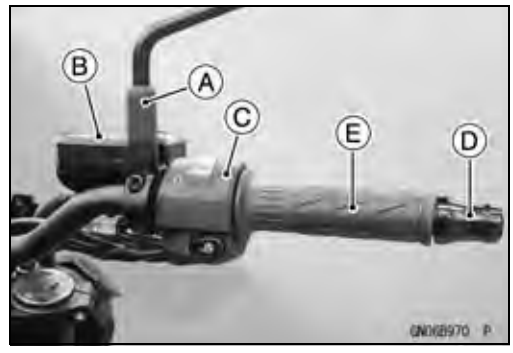

- When removing the lower handlebar holders, remove the following parts.
  Cotter Pin [A] (Both Sides)
  Lower Handlebar Holder Nut [B] (Both Sides)
  Washer [C] (Both Sides)

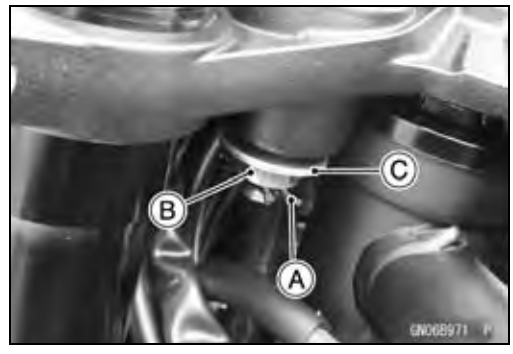

- Remove:
  Meter Unit (see Meter Unit Removal in the Electrical System chapter)
  Handlebar Holder Bolts [A]
  Handlebar Holder [B]
  Handlebars [C]
  Lower Handlebar Holders [D] and Washers (If necessary)

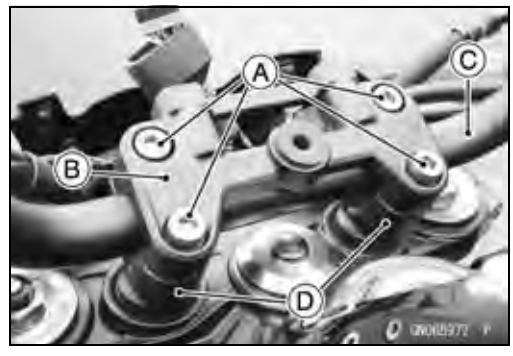

Handlebar Installation

- Install the lower handlebar holder [A] and washer [B] on both sides if removed.
- Align the punch mark [C] on the handlebars and the corner edge [D] on the lower handlebar holder.

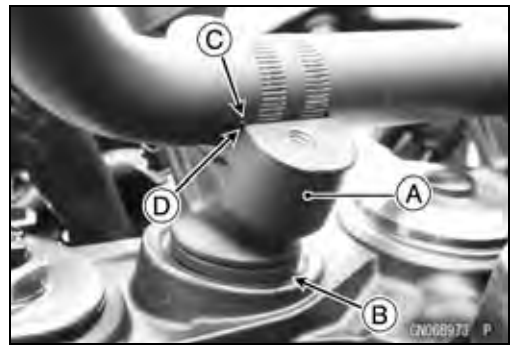

Handlebar

● When installing the lower handlebar holders, install the upper handlebar holder [A] and handlebar holder bolts [B] temporarily.

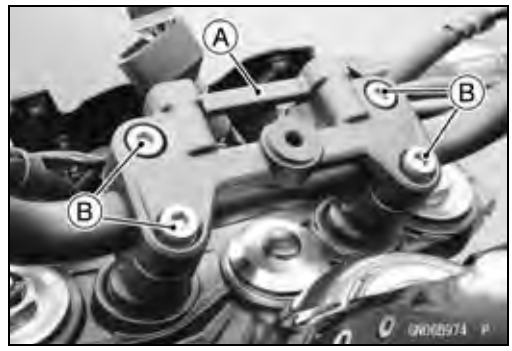

● Replace the lower handlebar holder nuts [A] with new ones.
● Install the washer [B] on both sides.
● Tighten:

Torque - Lower Handlebar Holder Nuts: 34 N·m (3.5 kgf·m, 25 ft·lb)

● Insert the cotter pin [C] on both sides from forward.

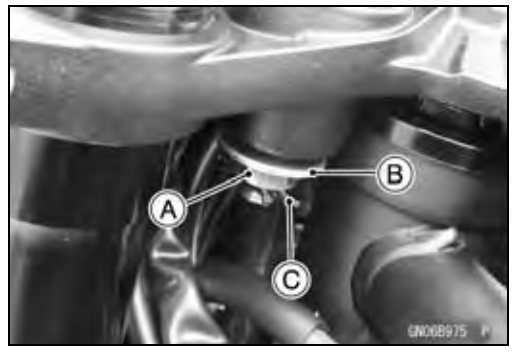

● Tighten the handlebar holder bolts following the tightening sequence [1 ~ 4].
● There will be a gap [A] at the rear part of the holder after tightening.

Torque - Handlebar Holder Bolts: 25 N·m (2.5 kgf·m, 18 ft·lb)

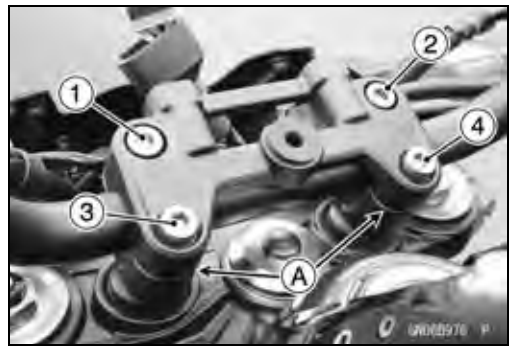

● Using a high flash-point solvent, clean of any oil or dirt that may be on the adhesive coating area. Dry them with a clean cloth.
● Apply adhesive [A] to the left side of the handlebars.
● Install the handlebar grip [B].
○Wipe off any protruding adhesive.
125 mm (4.92 in.) [C]
134 mm (5.28 in.) [D]
● Apply a non-permanent locking agent to the threads of the left handlebar weight bolt, and tighten it.

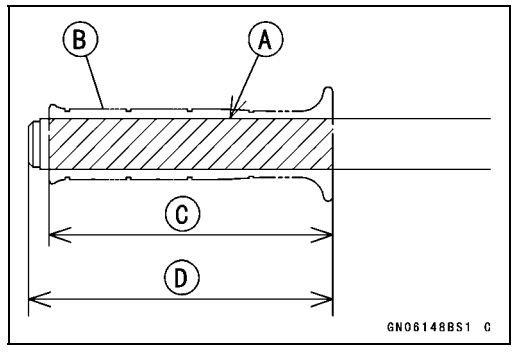

● Install the left switch housing.
○Fit the projection [A] into a hole [B] in the handlebars.
● Tighten:

Torque - Switch Housing Screws: 3.5 N·m (0.36 kgf·m, 31 in·lb)

● Install the clutch lever holder (see Clutch Lever Holder Installation in the Clutch chapter).

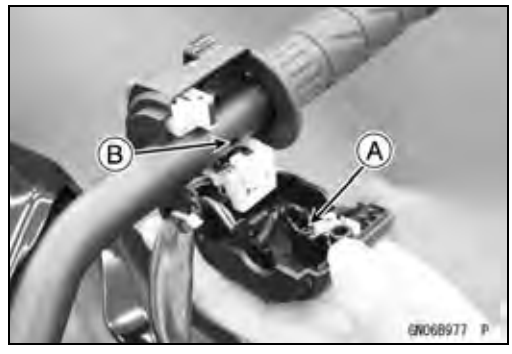

Handlebar

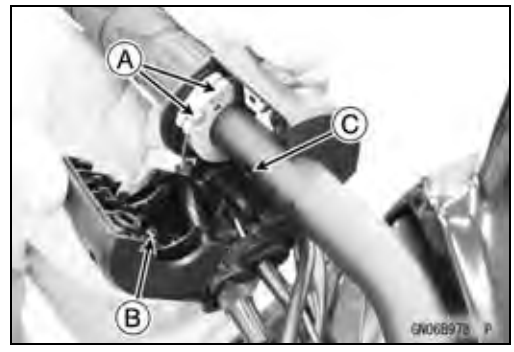

- Install:
  Throttle Grip
  Throttle Cable Tips [A]
  Right Switch Housing

○Fit the projection [B] into a hole [C] in the handlebars.

- Tighten:

Torque - Switch Housing Screws: 3.5 N·m (0.36 kgf·m, 31 in·lb)

- Apply a non-permanent locking agent to the threads of the right handlebar weight bolt, and tighten it.

- Install:
  Clutch Lever Assembly (see Clutch Lever Assembly Installation in the Clutch chapter)
  Front Master Cylinder (see Front Master Cylinder Installation in the Brakes chapter)
- Run the leads, cables and hoses correctly (see Cable, Wire, and Hose Routing section in the Appendix chapter).
- Install the removed parts (see appropriate chapters).

Frame

Table of Contents

Exploded View 15-3
Seats 15-14
Rear Seat Removal 15-14
Rear Seat Installation 15-14
Front Seat Removal 15-14
Front Seat Installation 15-15
Single Seat Cover Removal (Special Edition Models) 15-15
Single Seat Cover Installation (Special Edition Models) 15-15
Single Seat Cover Disassembly (Special Edition Models) 15-16
Fairings 15-17
Upper Fairing Removal 15-17
Upper Fairing Installation 15-18
Upper Fairing Disassembly 15-19
Upper Fairing Assembly 15-20
Fuel Tank Cover Removal 15-20
Fuel Tank Cover Installation 15-20
Ignition Switch Cover Removal 15-20
Ignition Switch Cover Installation 15-20
Middle Fairing Removal 15-21
Middle Fairing Installation 15-21
Middle Fairing Disassembly 15-21
Inner Cover Removal 15-22
Inner Cover Installation 15-22
Lower Fairing Removal 15-22
Lower Fairing Installation 15-22
Side Covers 15-23
Frame Cover Removal 15-23
Frame Cover Installation 15-23
Frame Sub Cover Removal 15-23
Frame Sub Cover Installation 15-23
Side Cover Removal 15-24
Side Cover Installation 15-24
Side Cover Disassembly 15-25
Seat Covers 15-26
Seat Cover Removal 15-26
Seat Cover Installation 15-27
Fenders 15-28
Front Fender Removal 15-28
Front Fender Installation 15-28
Flap Removal 15-28
Flap Installation 15-28
Rear Fender Removal 15-29
Rear Fender Installation 15-29
Battery Case Removal 15-31
Battery Case Installation 15-32
Frame 15-33
Frame Inspection 15-33
PAD Installation 15-33
Windshield (Special Edition Models) 15-34
Windshield Removal 15-34

Windshield Installation 15-34
Guards 15-35
Mud Guard Removal 15-35
Mud Guard Installation 15-35
Frame Slider Removal (Special Edition Models) 15-35
Frame Slider Installation (Special Edition Models) 15-37
Crankcase Ring Installation (Special Edition Models) 15-38
Front Axle Slider Removal (Special Edition Models) 15-38
Front Axle Slider Installation (Special Edition Models) 15-39
Radiator Guard Removal (Special Edition Models) 15-39
Radiator Guard Installation (Special Edition Models) 15-39
Side Stand 15-40
Side Stand Removal 15-40
Side Stand Installation 15-40
Rear View Mirrors 15-41
Rear View Mirror Removal 15-41
Rear View Mirror Installation 15-41

Exploded View

This page intentionally left blank.

Exploded View

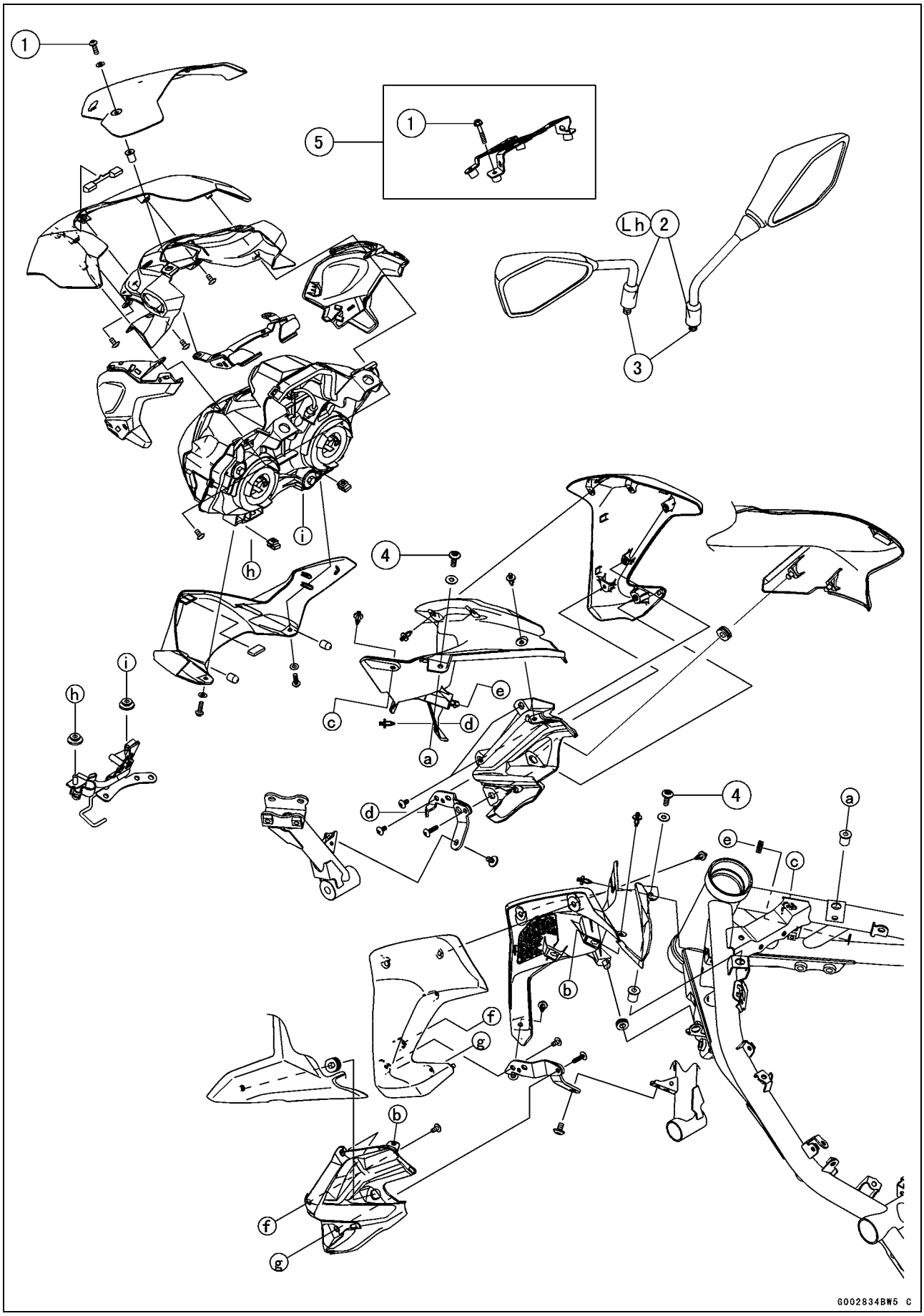

Exploded View

No.	Fastener	Torque			Remarks
		N·m	kgf·m	ft·lb	
1	Meter Cover Bolts	0.50	0.05	4.4 in·lb	
2	Rear View Mirror Locknuts (Upper)	18	1.8	13	Lh
3	Rear View Mirror Nuts (Lower)	30	3.1	22	
4	Inner Cover Bolts	1.0	0.10	8.9 in·lb	

5. ID Model

Lh: Left-hand Threads

Exploded View

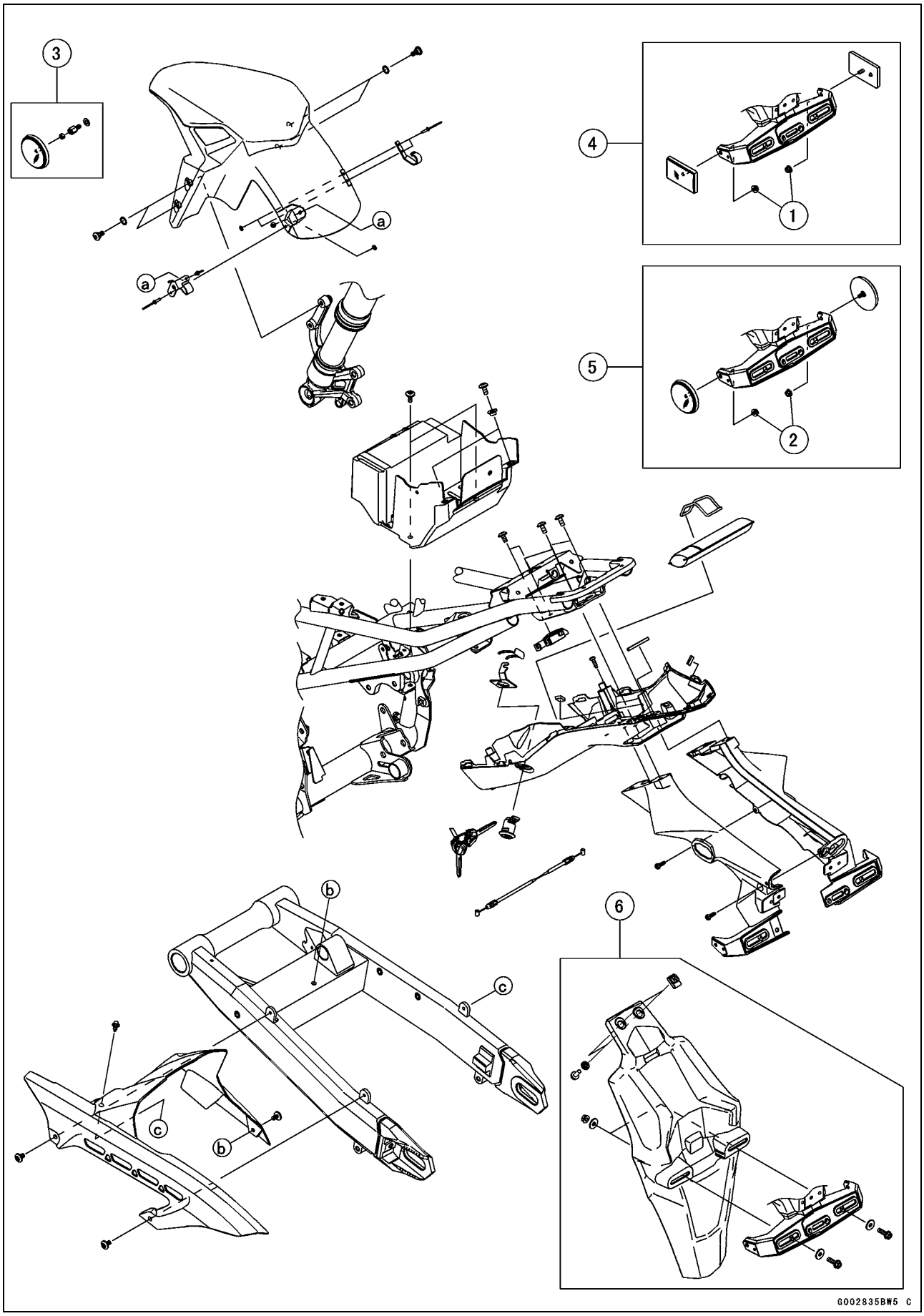

Exploded View

No.	Fastener	Torque			Remarks
		N·m	kgf·m	ft·lb	
1	Reflector Nuts	4.15	0.423	37 in·lb	
2	Reflector Nuts	4.0	0.41	35 in·lb	

3. US, CA and CAL Models
4. US, CA, CAL, AU, SEA-B1, MY and WVTA (FULL) Models
5. CN Model
6. MY, TH and CN Models

Exploded View

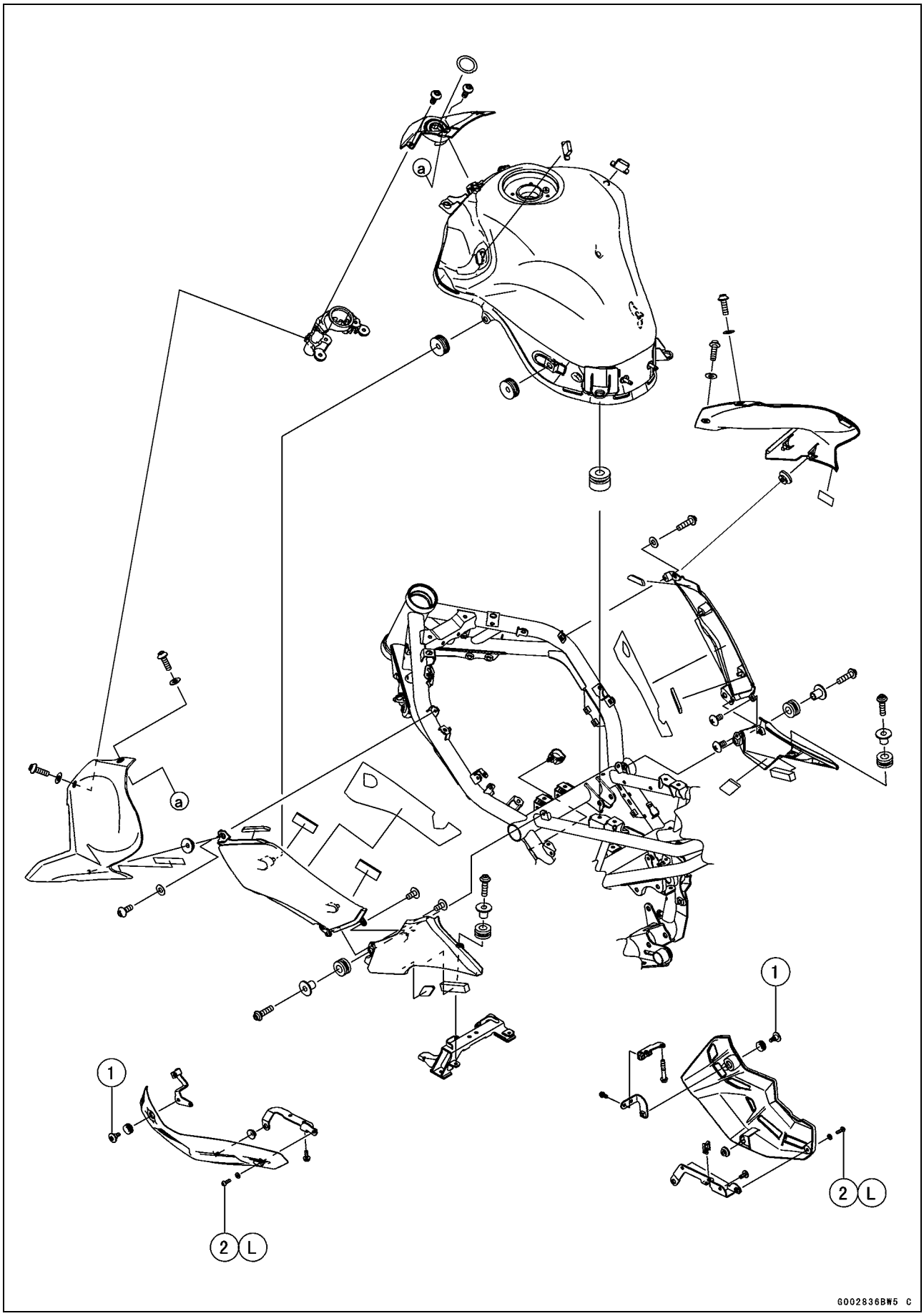

Exploded View

No.	Fastener	Torque			Remarks
		N·m	kgf·m	ft·lb	
1	Lower Fairing Bolts (M6)	9.8	1.0	87 in·lb	
2	Lower Fairing Bolts (M5)	3.0	0.31	27 in·lb	L

L: Apply a non-permanent locking agent.

Exploded View

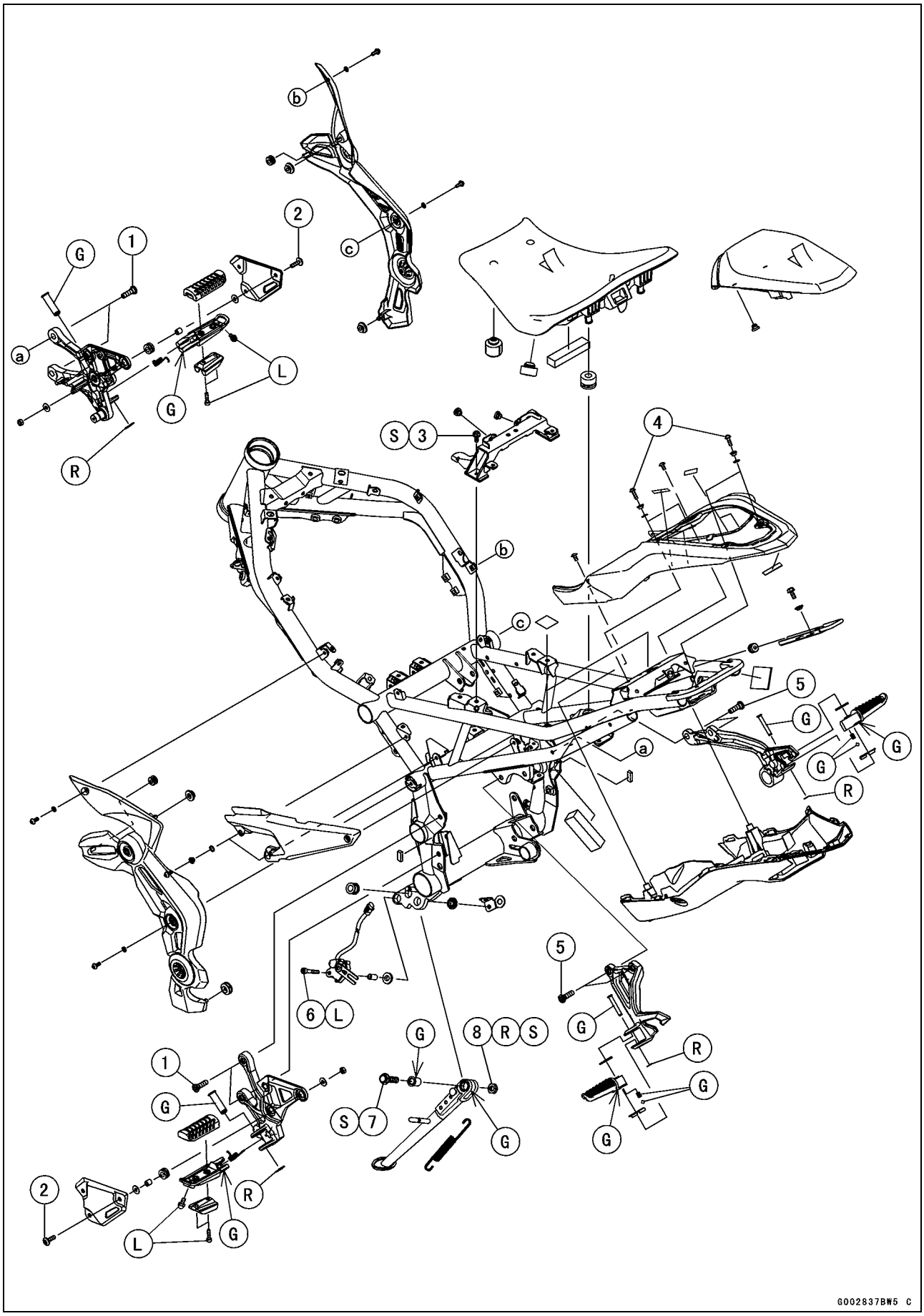

Exploded View

No.	Fastener	Torque			Remarks
		N·m	kgf·m	ft·lb	
1	Front Footpeg Bracket Bolts	25	2.5	18	
2	Heel Guard Bolts	6.9	0.70	61 in·lb	
3	Seat Bracket Bolts	6.9	0.70	61 in·lb	S
4	Seat Cover Bolts	5.0	0.51	44 in·lb	
5	Rear Footpeg Bracket Bolts	25	2.5	18	
6	Side Stand Switch Bolt	8.8	0.90	78 in·lb	L
7	Side Stand Bolt	44	4.5	32	S
8	Side Stand Nut	29	3.0	21	R, S

G: Apply grease.
L: Apply a non-permanent locking agent.
R: Replacement Parts
S: Follow the specified tightening sequence.

Exploded View

Special Edition Models

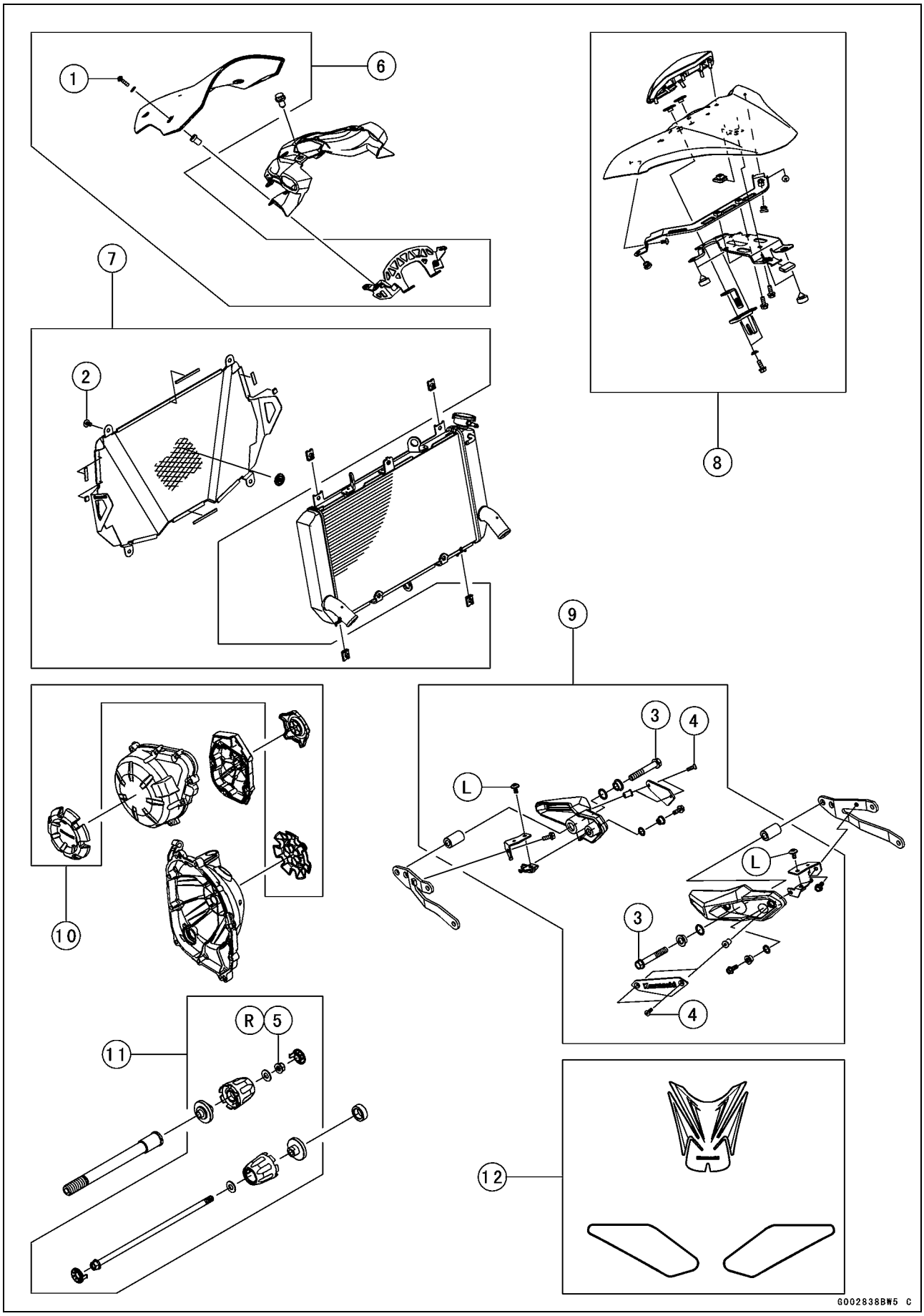

Exploded View

No.	Fastener	Torque			Remarks
		N·m	kgf·m	ft·lb	
1	Windshield Bolts	0.50	0.05	4.4 in·lb	
2	Radiator Guard Bolts	6.9	0.70	61 in·lb	
3	Middle Front Engine Mounting Bolts	44	4.5	32	
4	Frame Slider Cover Bolts	0.50	0.05	4.4 in·lb	
5	Front Axle Slider Nut	34	3.5	25	R

6. Windshield
7. Radiator Guard
8. Single Seat Cover
9. Frame Sliders
10. Crankcase Rings
11. Front Axle Slider
12. Tank Pad and Knee Pads

L: Apply a non-permanent locking agent.
R: Replacement Parts

Seats

Rear Seat Removal

- Insert the ignition switch key [A] into the seat lock, turning the key clockwise, pulling the front part of the rear seat [B] up, and pull the rear seat forward.

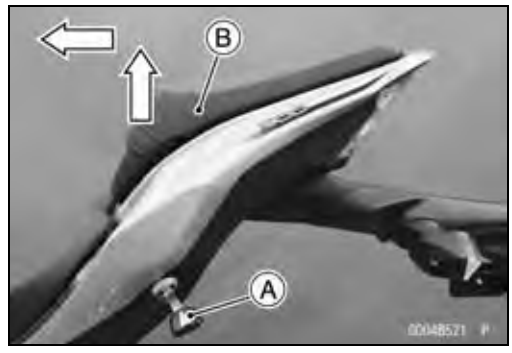

Rear Seat Installation

- Insert the hook [A] into the slot [B] of the frame.
- Insert the seat latch [C] into the latch hole [D].
- Push down the front part of the rear seat until the lock clicks.

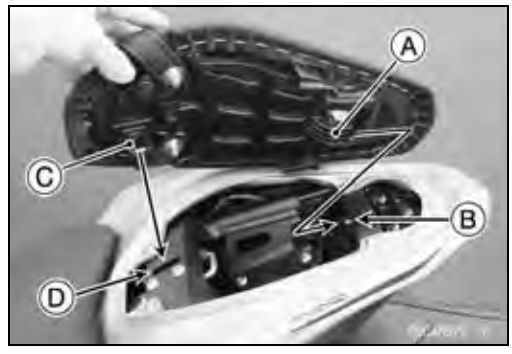

Front Seat Removal

- Remove the rear seat (see Rear Seat Removal).
- Slide the seat lock bracket [A] backward.

- Pull the rear part of the front seat [A] upward to clear the projections [B], and remove the front seat backward.

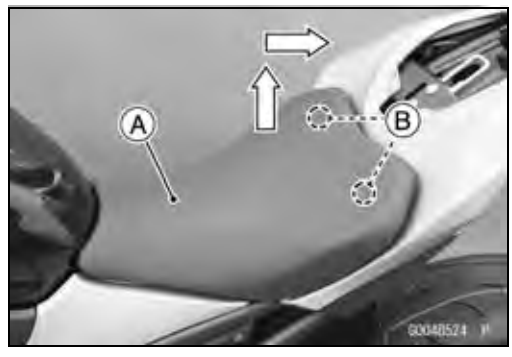

- When removing the seat bracket [A], install it as following.
- Install the seat bracket.
- Tighten the left seat bracket bolt [B] first, and then tighten the right seat bracket bolt [C].

○Tighten the seat bracket bolts temporarily, and then tighten them to specified torque.

Torque - Seat Bracket Bolts: 6.9 N·m (0.70 kgf·m, 61 in·lb)

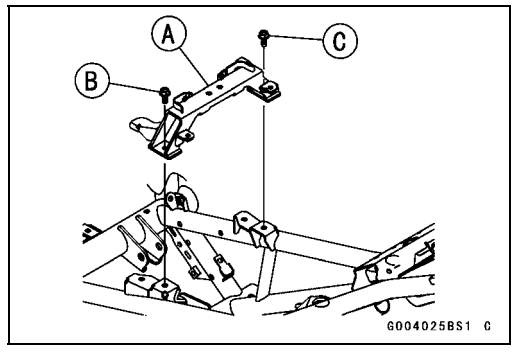

Seats

Front Seat Installation

- Insert the hook [A] under the seat bracket [B].
- Insert the projections [C] into the grommets [D] on the frame.

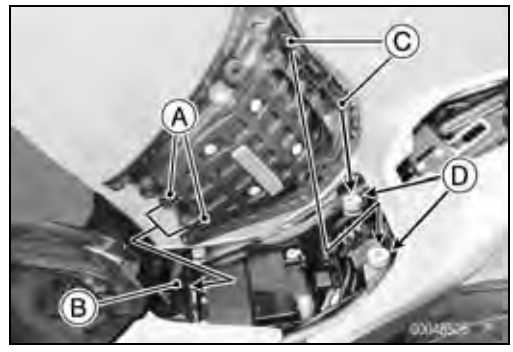

- Slide the seat lock bracket [A] into the hole [B] of the front seat completely.

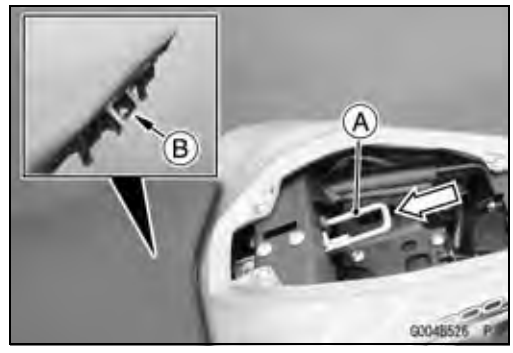

Single Seat Cover Removal (Special Edition Models)

- Insert the ignition switch key [A] into the seat lock, turning the key clockwise, pulling the front part of the single seat cover [B] up, and pull the single seat cover forward.

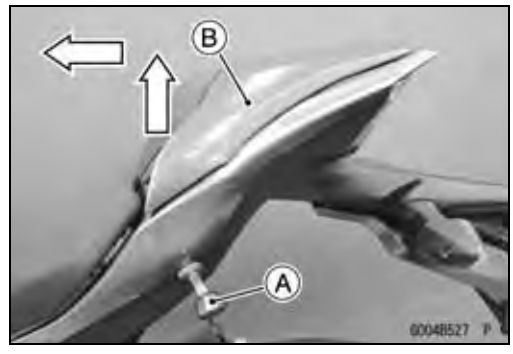

Single Seat Cover Installation (Special Edition Models)

- Check that the dampers [A] are in place on the single seat cover.

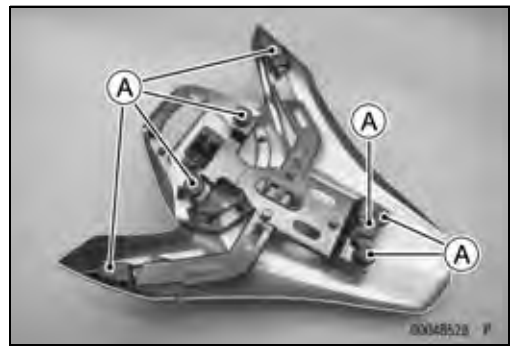

- Insert the hook [A] into the slot [B] of the frame.
- Insert the seat latch [C] into the latch hole [D].
- Push down the front part of the single seat cover until the lock clicks.

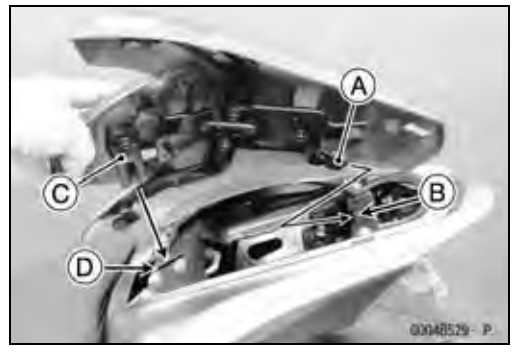

Seats

Single Seat Cover Disassembly (Special Edition Models)

● Remove:
Bolts [A]
Seat Latch Cover [B]
Seat Latch [C]

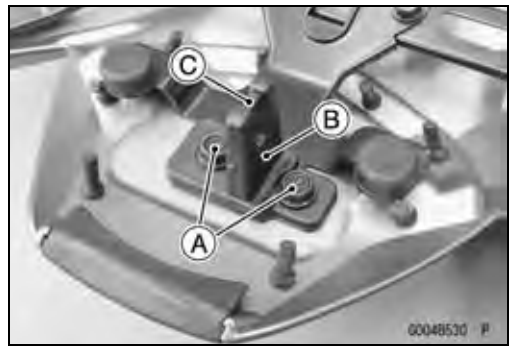

● Remove:
Bolts [A]
Bracket [B]

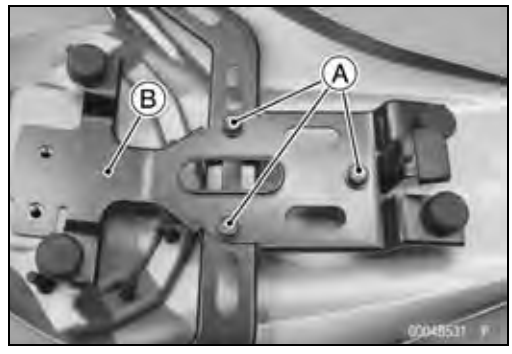

● Remove:
Screws [A]
Bracket [B]

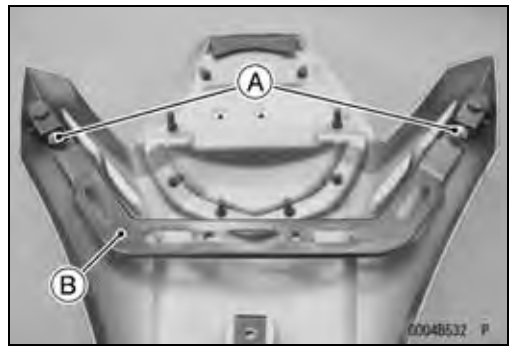

● Remove:
Pad [A]
Nuts [B]

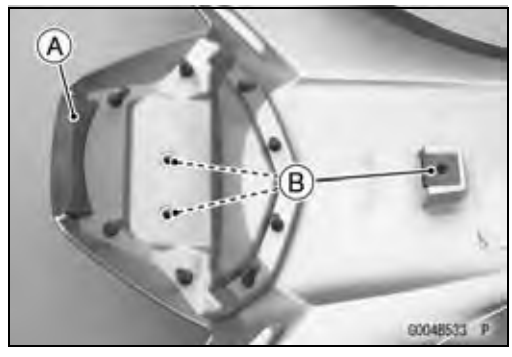

Fairings

Upper Fairing Removal

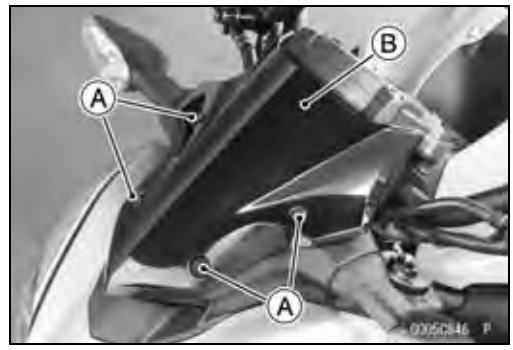

- Remove:
  Meter Cover Bolts [A] and Washers
  Meter Cover [B] (Windshield: Special Edition Models)

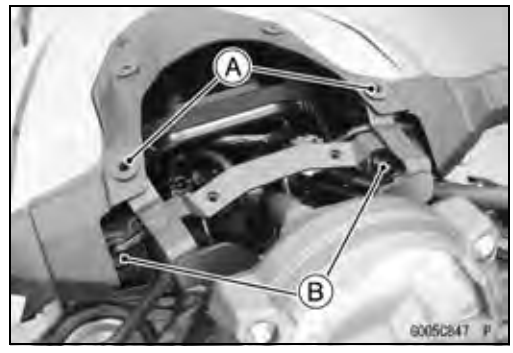

- Remove:
  Wellnuts [A] (Quick Rivets: Special Edition Models)
  Bolts [B]

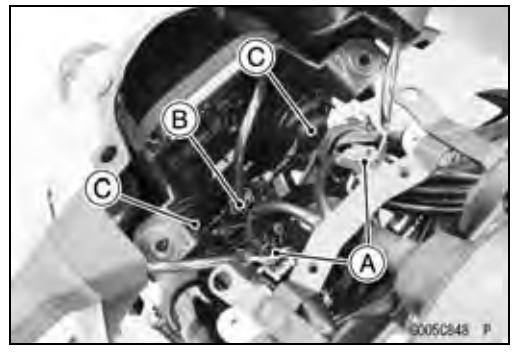

- Disconnect:
  Turn Signal Light Lead Connectors [A]
  City Light Lead Connector [B]
  Headlight Connectors [C]

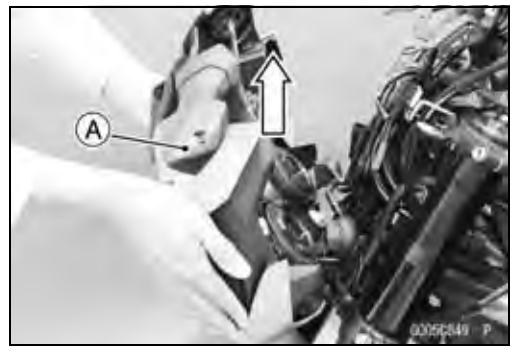

- Remove the upper fairing assy [A] upward.

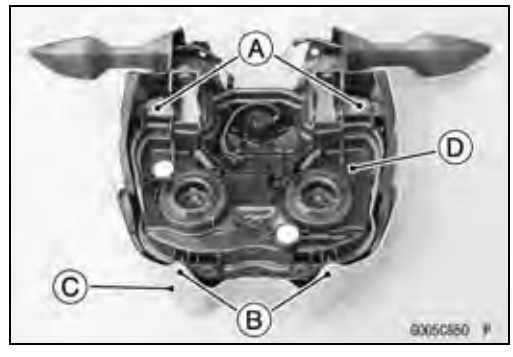

- Remove:
  Screws [A]
  Bolts [B]
- Separate the upper fairing [C] and headlight unit [D].

Fairings

Upper Fairing Installation

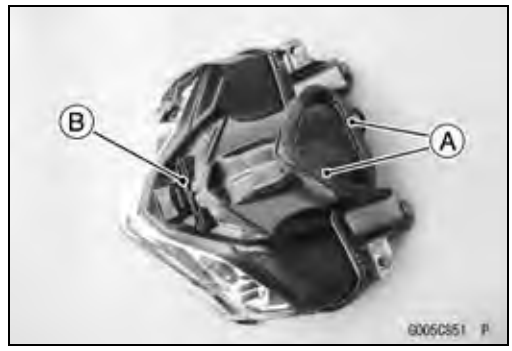

- Installation is the reverse of removal.
- Check that the pads [A] and damper [B] are in place on the headlight unit.
  About 2 ~ 4 mm (0.08 ~ 0.16 in.) [C] (Constant)
  About 5 mm (0.20 in.) [D]
  About 0 ~ 4 mm (0 ~ 0.16 in.) [E] (Left and Right)

○Install the pad until last parallel to this line [F].
○Install the pad on the corner [G].

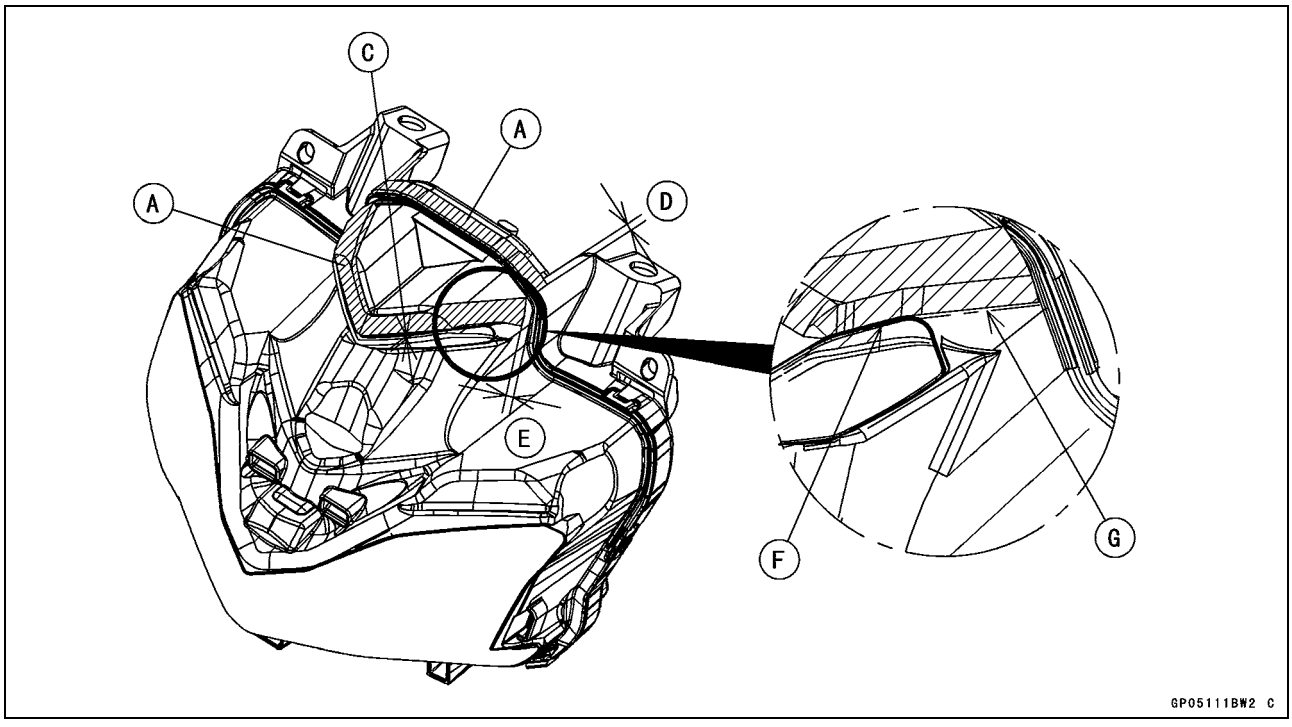

- Check that the dampers [A] are in place on the upper fairing.

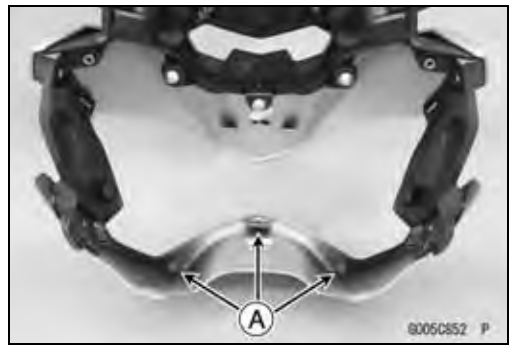

- Insert the tabs [A] and dampers [B] of the upper fairing into the slots [C] on the headlight unit.

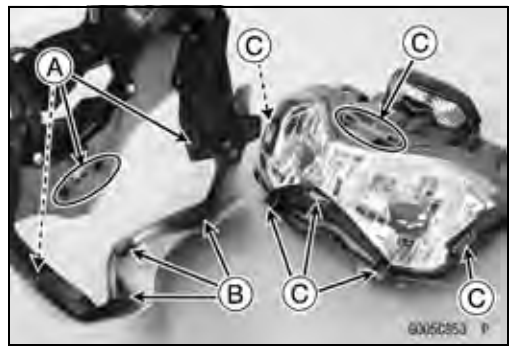

Fairings

● Insert the projections [A] of the bracket into the grommets [B] on the upper fairing.

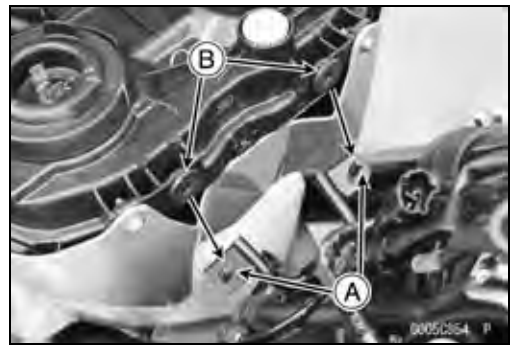

● Connect the connectors.
○The right headlight lead has the green tape mark [A].
● Tighten:

Torque - Meter Cover Bolts: 0.50 N·m (0.05 kgf·m, 4.4 in·lb)

Upper Fairing Disassembly

● Push the tab [A] while pulling the cover [B] slowly to clear the hooks [C] as shown.

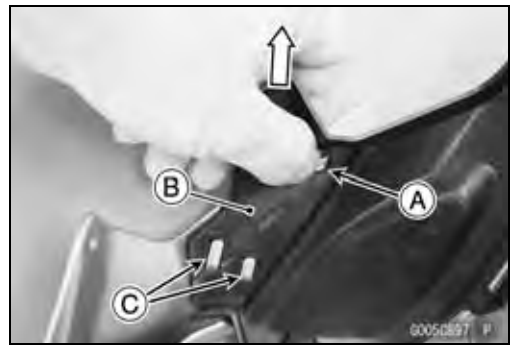

● Clear the hooks [A] and projection [B], and remove the cover [C].

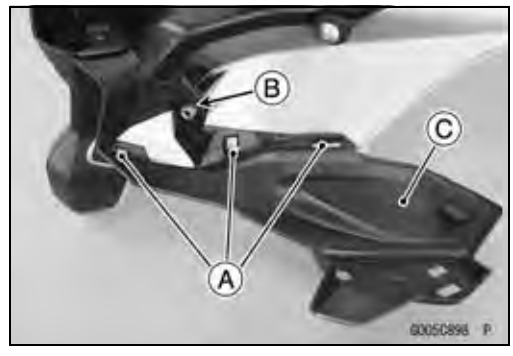

● Remove:
Screws [A]
Cover [B]

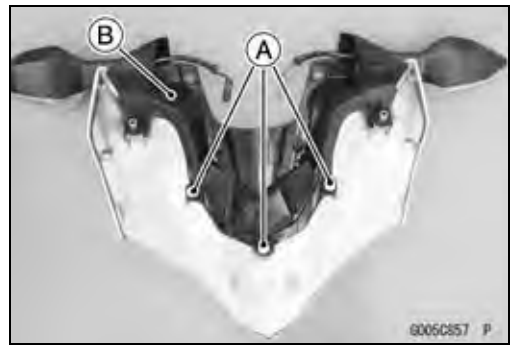

Fairings

Upper Fairing Assembly

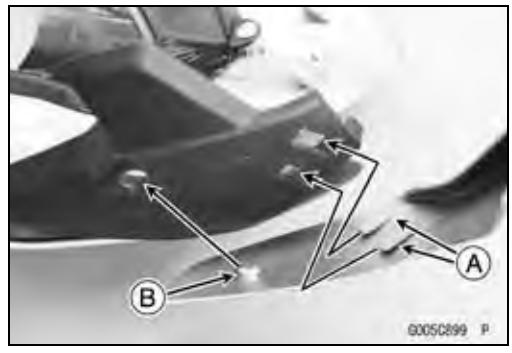

- Assembly is the reverse of disassembly.
- Insert the hooks [A] to the slots first, and then fit the tab [B] to the hole slowly.

Fuel Tank Cover Removal

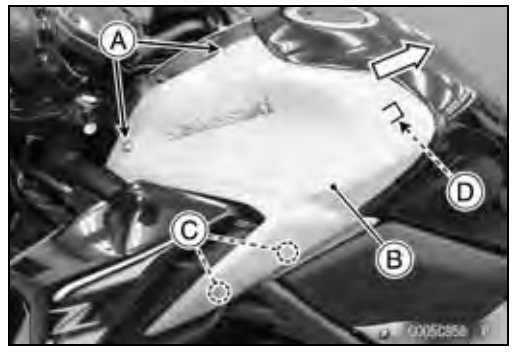

- Remove:
  Bolts [A] and Washers
- Pull the lower side of the fuel tank cover [B] outward to clear the projections [C].
- Remove the fuel tank cover backward to clear the hook [D].

Fuel Tank Cover Installation

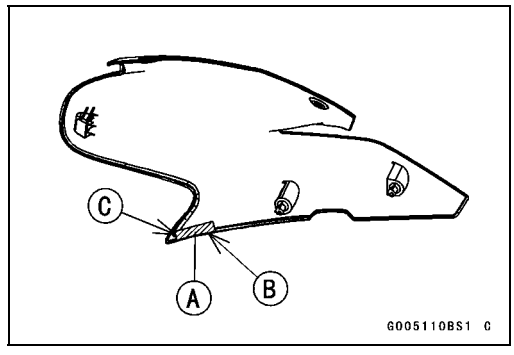

- Installation is the reverse of removal.
- Check that the pad [A] is in place on the fuel tank cover.
  ○Fit the pad to the rounded end [B].
  ○Fit the pad to the scribe line [C].

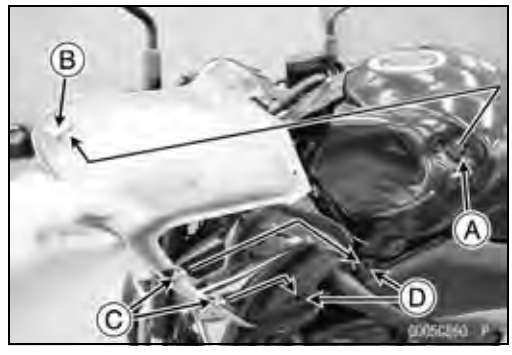

- Insert the hook [A] of the fuel tank into the slot [B] on the fuel tank cover.
- Insert the projections [C] of the fuel tank cover into the grommets [D].

Ignition Switch Cover Removal

- Remove:
  Fuel Tank Covers (see Fuel Tank Cover Removal)
  Bolts [A]
  Ignition Switch Cover [B]

Ignition Switch Cover Installation

- Installation is the reverse of removal.

Fairings

Middle Fairing Removal

● Remove:
Fuel Tank Cover (see Fuel Tank Cover Removal)
Quick Rivets [A]

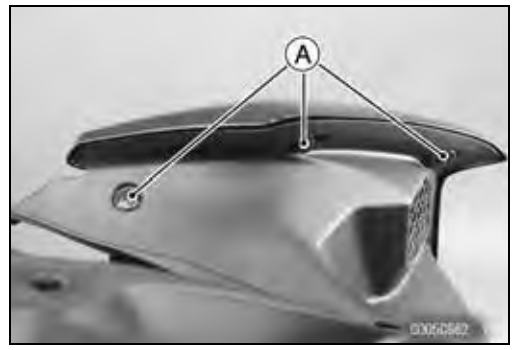

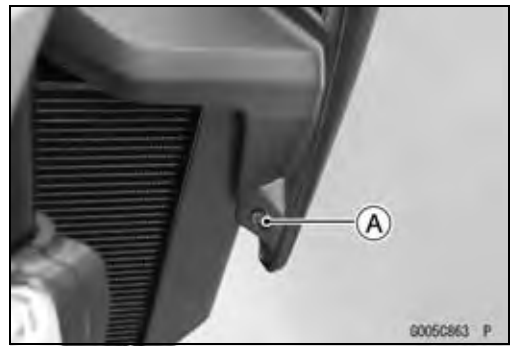

● Remove:
Bolt [A]
Middle Fairing [B]

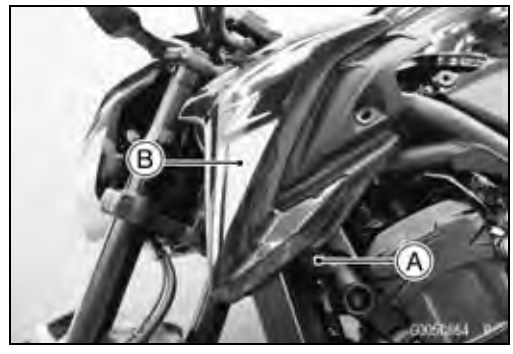

Middle Fairing Installation

● Installation is the reverse of removal.

Middle Fairing Disassembly

● Remove:
Screws [A]
Bracket [B]
Cover [C]

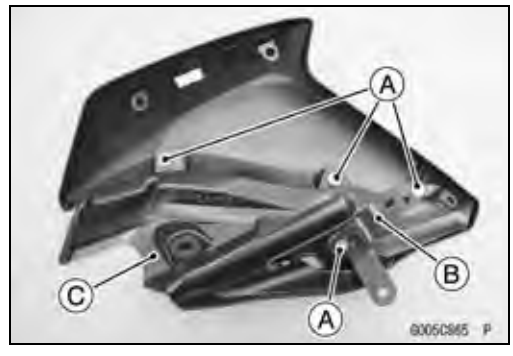

Fairings

Inner Cover Removal

- Remove:
  Middle Fairing (see Middle Fairing Removal)
- For the left inner cover, disconnect the regulator/rectifier connector [A].

- Remove:
  Quick Rivet [A]
  Inner Cover Bolt [B]
- Remove the inner cover [C] forward to clear the projection [D].

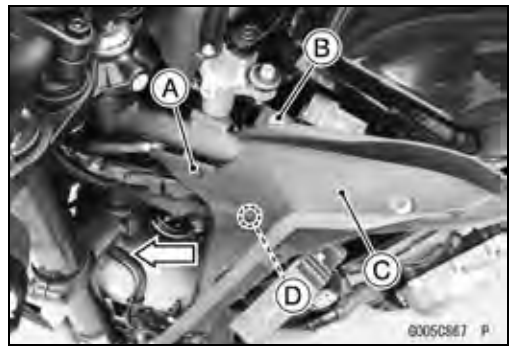

Inner Cover Installation

- Installation is the reverse of removal.
- Insert the projection [A] of the inner cover into the grommet [B].
- Tighten:

Torque - Inner Cover Bolt: 1.0 N·m (0.10 kgf·m, 8.9 in·lb)

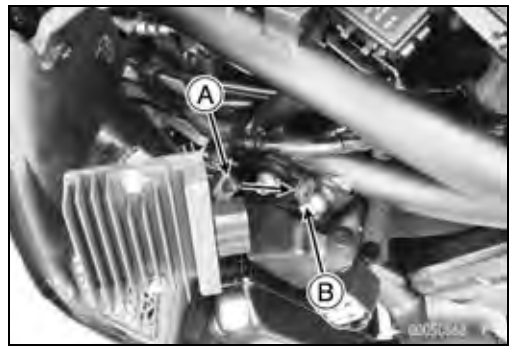

Lower Fairing Removal

- Remove:
  Lower Fairing Bolt (M6) [A]
  Lower Fairing Bolt (M5) [B]
- Remove the lower fairing [C] outward to clear the projection [D].

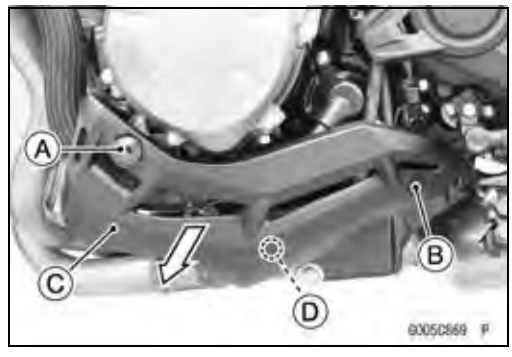

Lower Fairing Installation

- Insert the projection [A] of the lower fairing into the grommet [B].
- Apply a non-permanent locking agent to the lower fairing bolt (M5).
- Tighten:

Torque - Lower Fairing Bolt (M6): 9.8 N·m (1.0 kgf·m, 87 in·lb)
Lower Fairing Bolt (M5): 3.0 N·m (0.31 kgf·m, 27 in·lb)

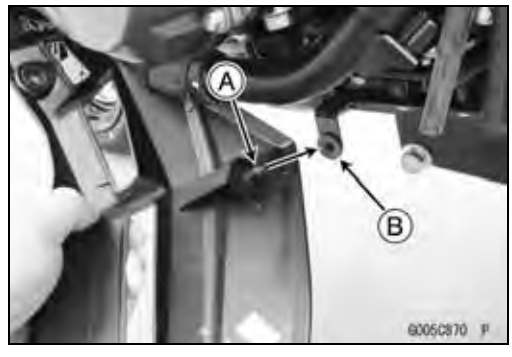

Side Covers

Frame Cover Removal

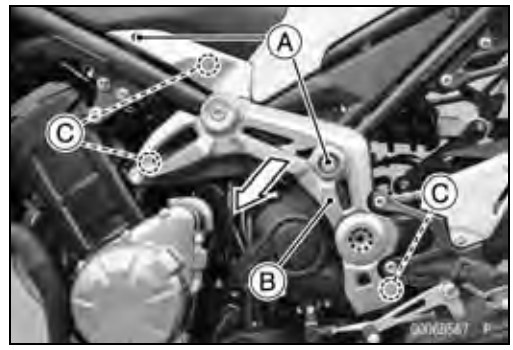

- Remove:
  Bolts [A] and Washers
- Remove the frame cover [B] outward to clear the projections [C].

Frame Cover Installation

- Installation is the reverse of removal.
- Check that the pad [A] is in place on the frame.

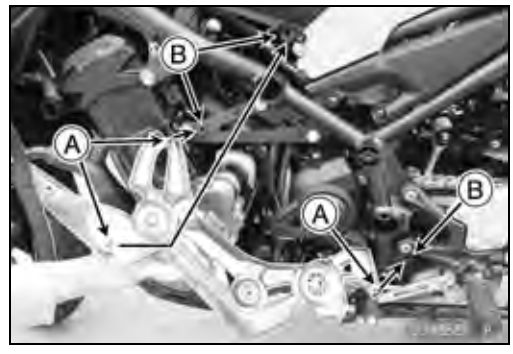

- Insert the projections [A] of the frame cover into the grommets [B].

Frame Sub Cover Removal

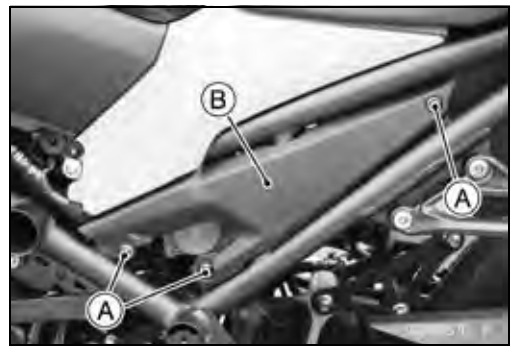

- Remove:
  Left Frame Cover (see Frame Cover Removal)
  Bolts [A], Washers and Collars
  Frame Sub Cover [B]

Frame Sub Cover Installation

- Installation is the reverse of removal.

Side Covers

Side Cover Removal

- Remove:
  Front Seat (see Front Seat Removal)
  Fuel Tank Cover (see Fuel Tank Cover Removal)
  Frame Cover (see Frame Cover Removal)
  Bolt [A] and Collar

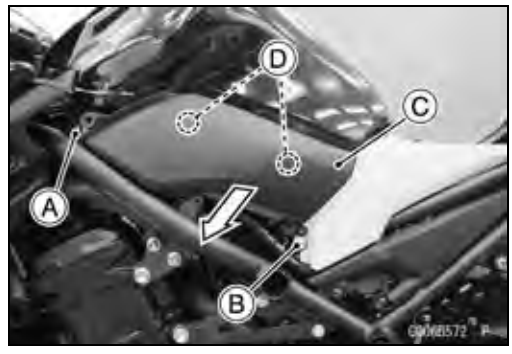

- Remove:
  Bolt [A] and Washer
  Bolt [B] and Collar
- Remove the side cover [C] outward to clear the projections [D].

Side Cover Installation

- Installation is the reverse of removal.
- Check that the pads [A] are in place on the side cover.
  Left Side [B]
  Right Side [C]
  Both Sides [D]
  About 2.5 mm (0.098 in.) [E]
  About 15 mm (0.59 in.) [F]

○Fit the pad to the rounded end [G].
○Fit the pad to the scribe line [H].
○Fit the pad to the edge [I].

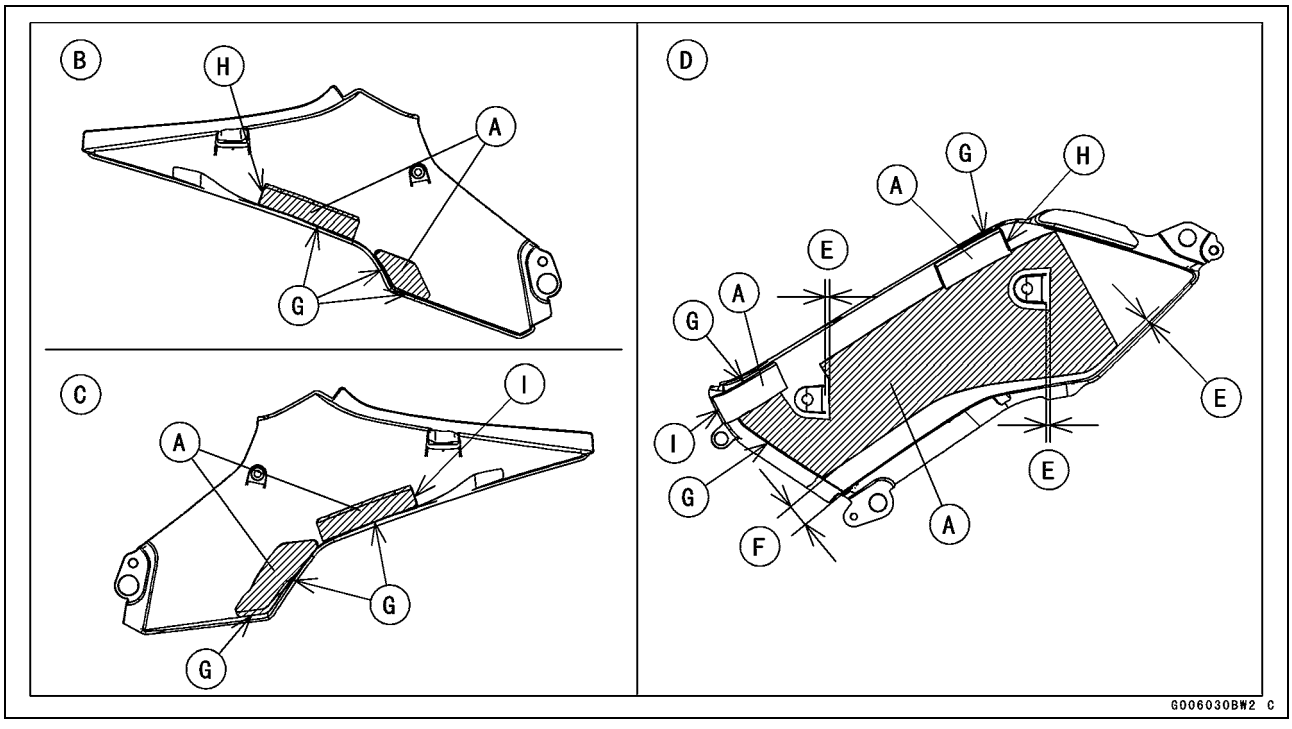

Side Covers

- Insert the projections [A] of the side cover into the grommets [B].

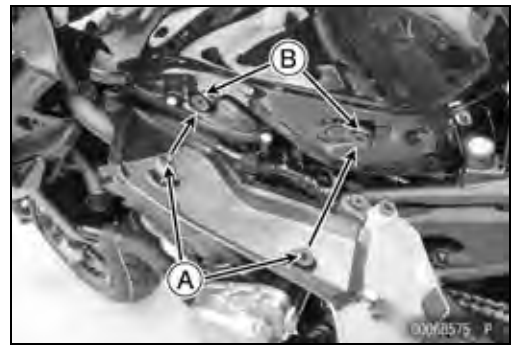

Side Cover Disassembly

- Remove the screws [A] and separate the covers [B].

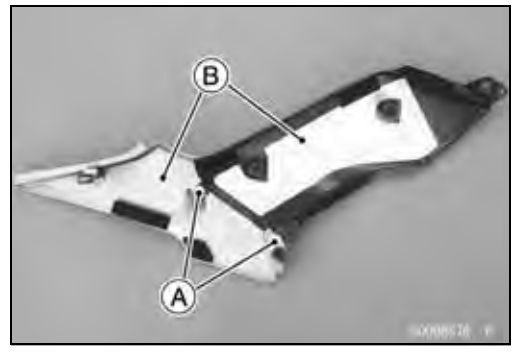

Seat Covers

Seat Cover Removal

Hooks [A]

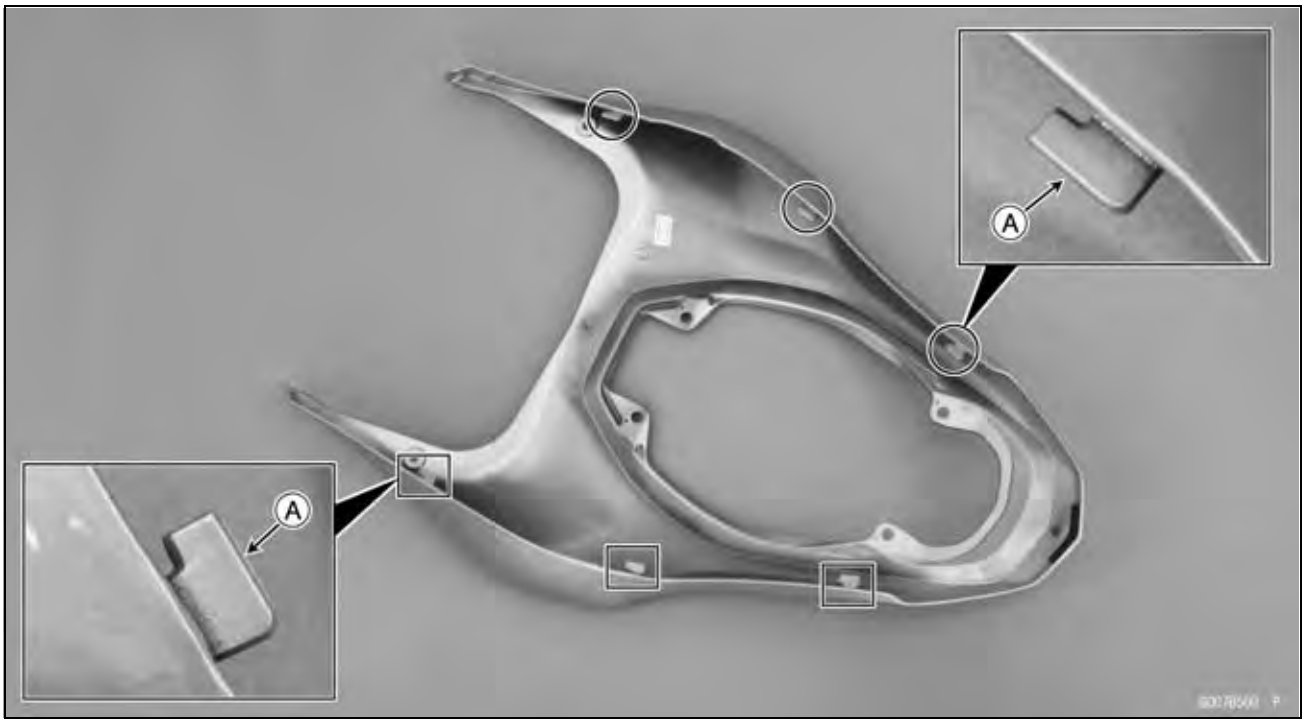

● Remove:
Front Seat (see Front Seat Removal)
Screws [A]
Seat Cover Bolts [B], Washers and Collars

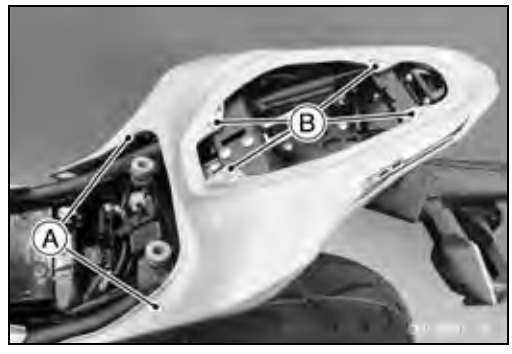

● Remove the seat cover [A] backward to clear the hooks [B].

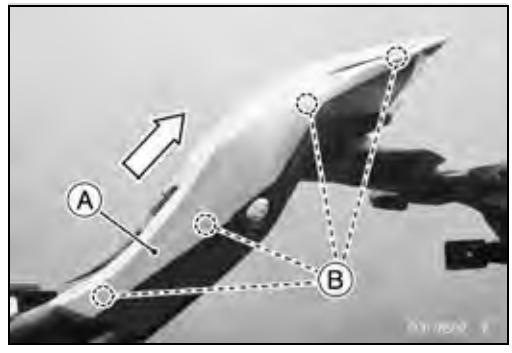

Seat Covers

Seat Cover Installation

- Installation is the reverse of removal.
- Check that the pads [A] are in place on the seat cover.
  Less than 2 mm (0.08 in.) [B]
  Viewed from X [C]
  Viewed from Y [D]

○Fit the pad to the rounded end [E].
○Fit the pad corner with center [F] of the seat cover.
○Fit the pad to the parting line [G].
○Fit the pad to the scribe line [H].

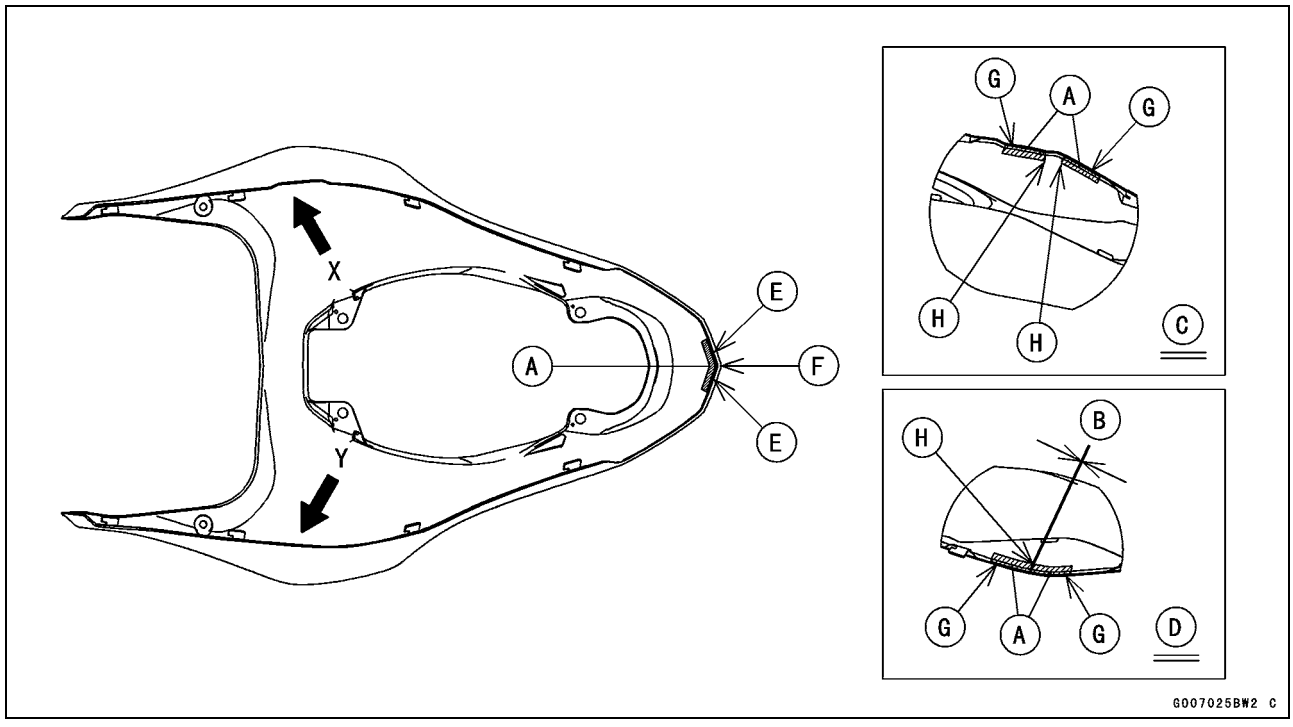

- Insert the hooks [A] of the seat cover into the slots [B] on the rear fender.
- Tighten:

Torque - Seat Cover Bolts: 5.0 N·m (0.51 kgf·m, 44 in·lb)

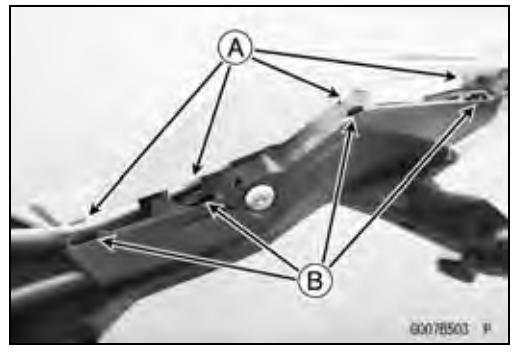

Fenders

Front Fender Removal

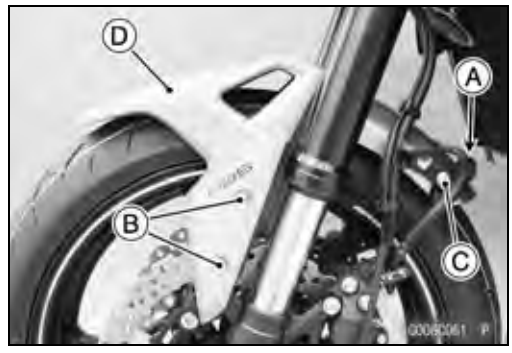

- Free the brake hose from the clamp [A] on both sides.
- Remove:
  Bolts [B] (Both Sides)
  Brake Hose Clamp Bolt [C]
  Front Fender [D]

Front Fender Installation

- Installation is the reverse of removal.
- Tighten:

Torque - Brake Hose Clamp Bolt: 6.9 N·m (0.70 kgf·m, 61 in·lb)

Flap Removal

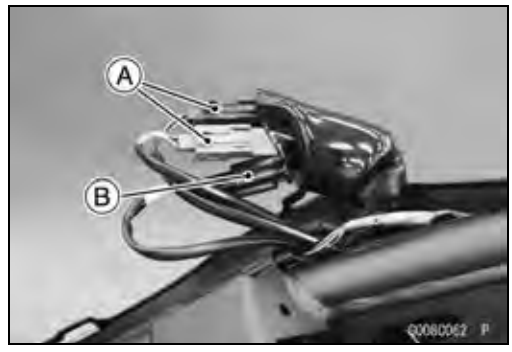

- Remove:
  Seat Cover (see Seat Cover Removal)
- Disconnect:
  Turn Signal Light Lead Connectors [A]
  License Plate Light Lead Connector [B]

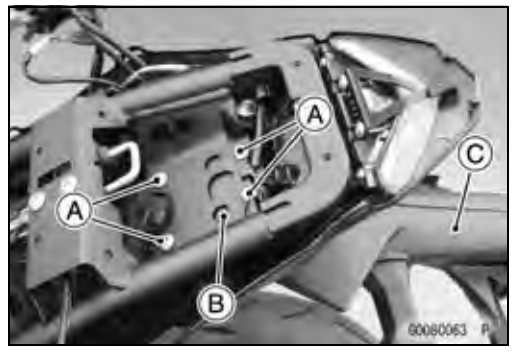

- Remove:
  Bolts [A]
  Screw [B]
  Flap [C]

Flap Installation

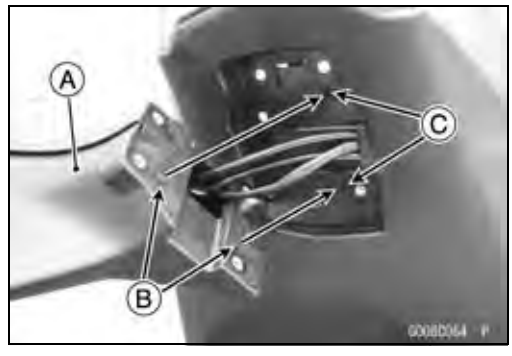

- Installation is the reverse of removal.
- Install the flap [A] so that the projections [B] fit into the holes [C] on the rear fender.
- Run the leads correctly (see Cable, Wire, and Hose Routing section in the Appendix chapter).

Fenders

Rear Fender Removal

- Remove:
  Seat Cover (see Seat Cover Removal)
  Flap (Flap Removal)
  Tool Kit
  Screws [A]
  Kawasaki Diagnosis System Connector [B]
  ABS Kawasaki Diagnostic System Connector (ABS Equipped Models) [C]
- Disconnect the tail/brake light lead connector [D].

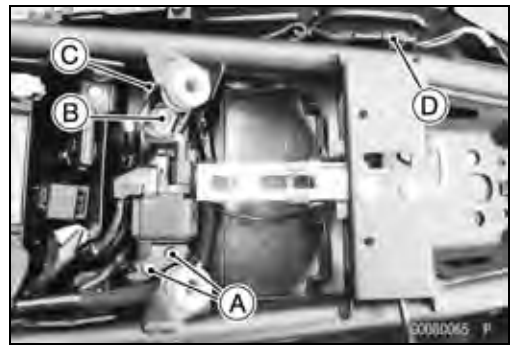

- Remove the seat lock cable [A] from the bracket [B].
- Remove the cable end [C] from the seat lock [D].
- Remove:
  Lock Plate [E]
  Seat Lock
  Bracket

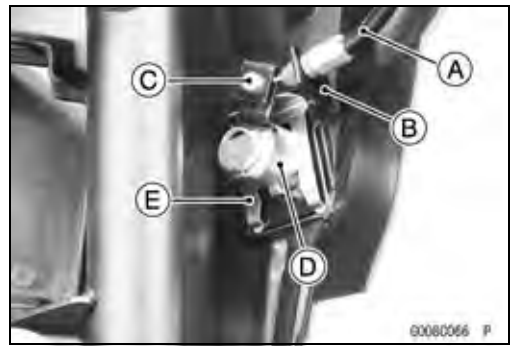

- Remove:
  Bolts [A] and Collars

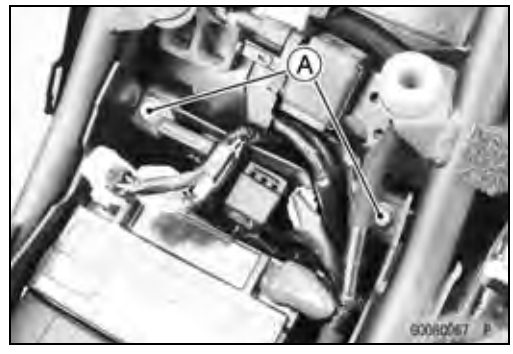

- Remove the rear fender [A] backward to clear the hook [B].

★If necessary, remove the tail brake light (see Tail/Brake Light (LED) Removal in the Electrical System chapter).

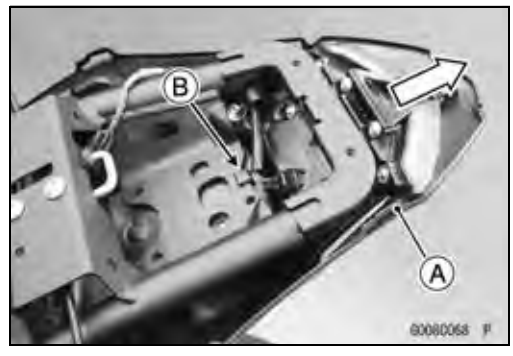

Rear Fender Installation

- Installation is the reverse of removal.
- When removing the tail/brake light, check that the pads [A] on the rear fender.

○Fit the pad to the corner [B].
○Fit the pad to the rounded end [C].
○Fit the pad corner with the center [D] of the rear fender.

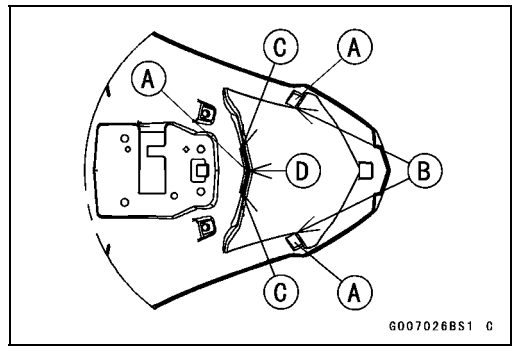

Fenders

● Check that the pads [A] are in place on the frame.
Left Side [B]
Right Side [C]
About 12 mm (0.47 in.) [D]
Section Y - Y [E]
Viewed from X [F]
About 9 mm (0.35 in.) [G]
30° [H]
Section Z - Z [I]
Pad Installation Position [J]

○Press the pad to the frame strongly to prevent the pad from riding up in this area [K].
○Push the pad in this area [L] as deeper as better.
○Install the pad over the center of the pipe [M].
○Fit the pad to end of the curve [N].

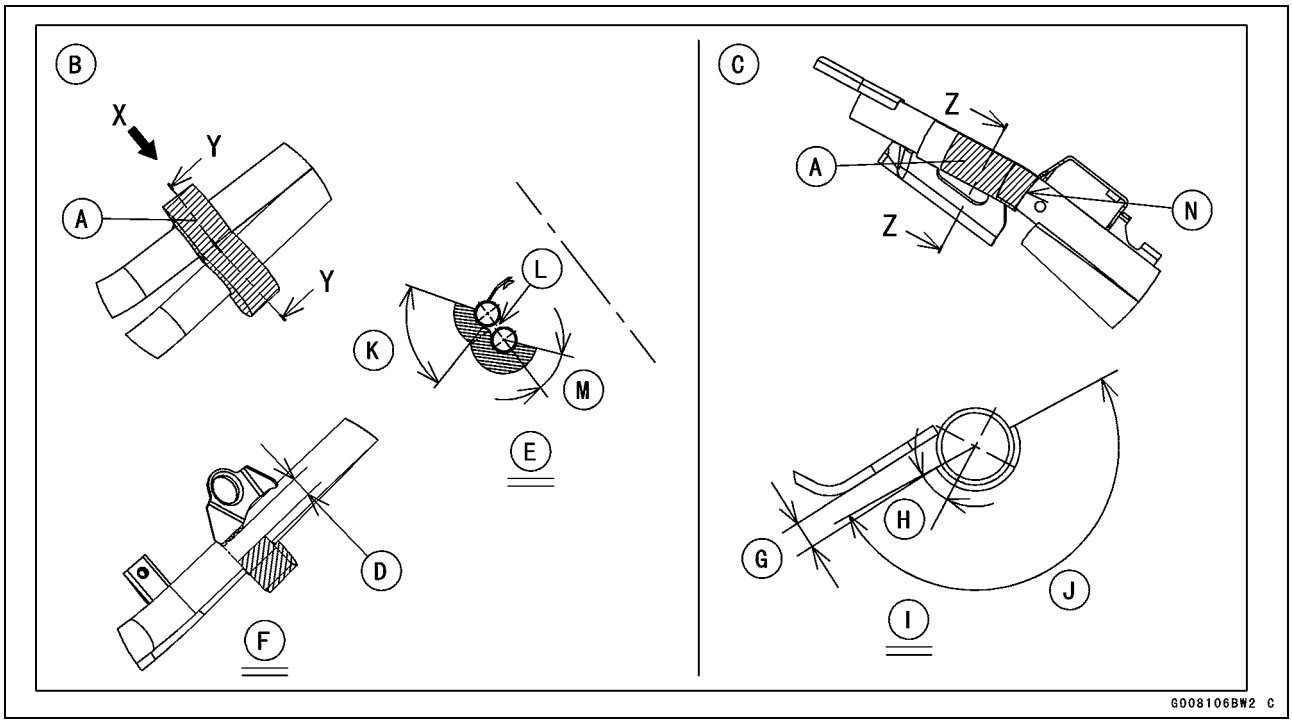

Fenders

● Check that the pad [A] is in place on the frame.
Both Sides [B]
About 52 mm (2.05 in.) [C]
Center Line [D] of Vehicle
90° [E]
Pad Installation Positions [F]
Section X - X [G]

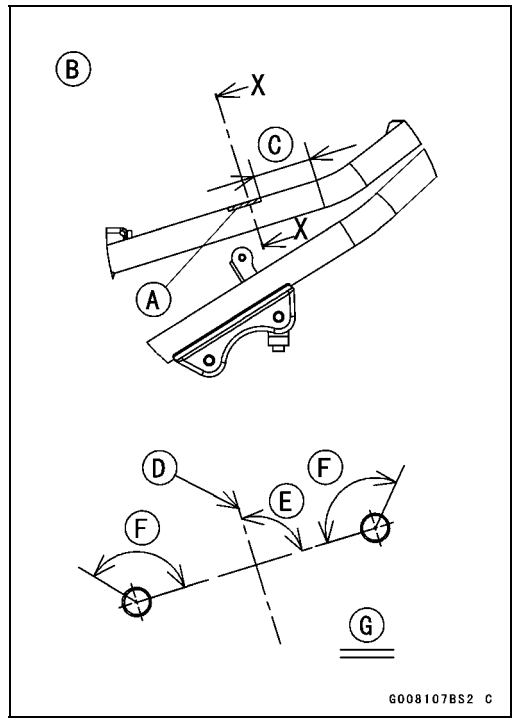

Battery Case Removal

● Remove:
Fuel Tank (see Fuel Tank Removal in the Fuel System (DFI) chapter)
Battery (see Battery Removal in the Electrical System chapter)
Screws [A]
Kawasaki Diagnostic System Connector [B]
ABS Kawasaki Diagnosis System Connector (ABS Equipped Models) [C]

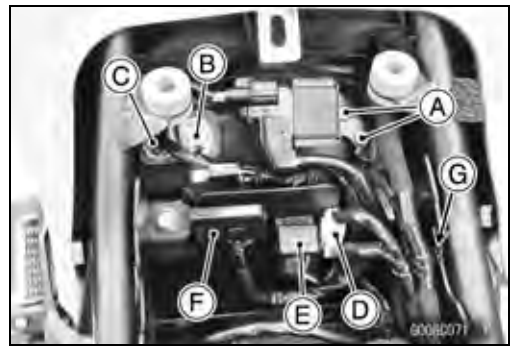

● Remove the following parts from the battery case.
Battery Positive (+) Lead Connector [D]
Turn Signal Light Relay [E]
Fuse Box (2) [F]
Clamp [G]

● Remove:
Bolts [A] and Collars
Bolts [B]

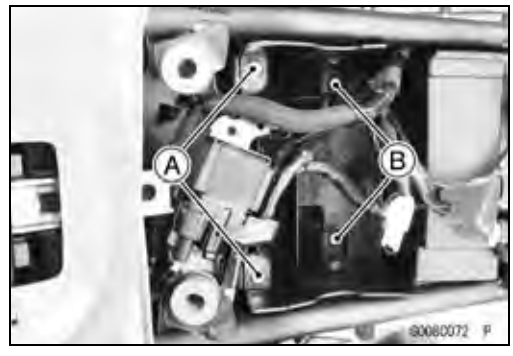

Fenders

- For the evaporative emission control system equipped models, remove the following parts.
  Purge Valve Bracket Bolts [A]
  Purge Valve [B]

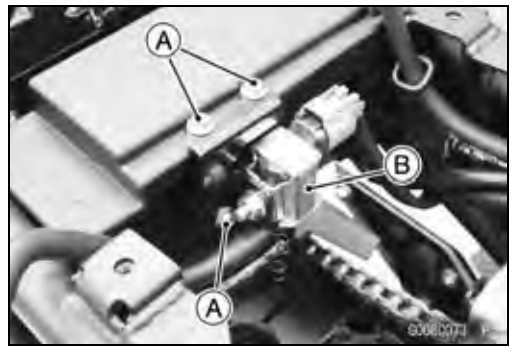

- Remove the battery case [A] upward.

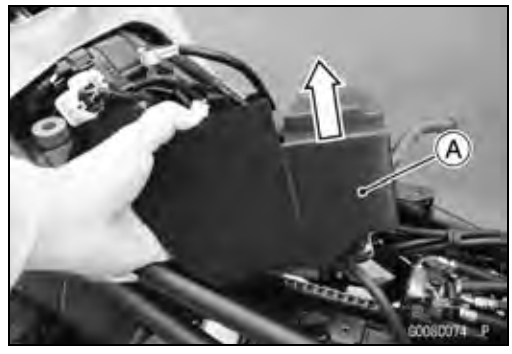

- For the evaporative emission control system equipped models, remove the following parts.
  Canister Holder Bolts [A]
  Canister Holder [B]

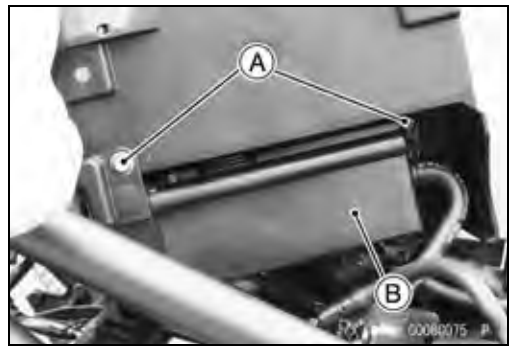

Battery Case Installation

- Installation is the reverse of removal.
- Tighten:

Torque - Canister Holder Bolts: 1.1 N·m (0.11 kgf·m, 10 in·lb)
Purge Valve Bracket Bolts: 1.1 N·m (0.11 kgf·m, 10 in·lb)

Frame

Frame Inspection

● Visually inspect the frame for cracks, dents, bending, or warp.

○If there is any damage to the frame, replace it.

⚠ WARNING

A repaired frame may fail in use, possibly causing an accident resulting in injury or death. If the frame is bent, dented, cracked, or warped, replace it.

PAD Installation

● Install the pad [A] is in place on the frame.

About 5 mm (0.20 in.) [B] (Distance from the welding bead)

About 30 mm (1.18 in.) [C]

About 6 mm (0.24 in.) [D] (Distance from the end of the curve)

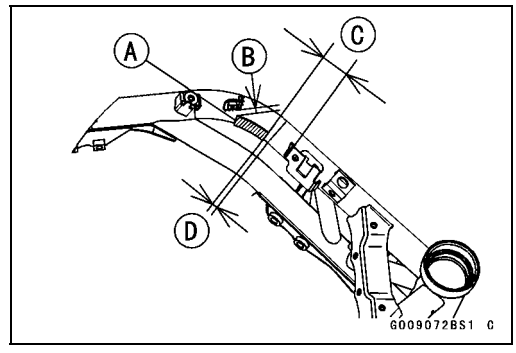

Windshield (Special Edition Models)

Windshield Removal

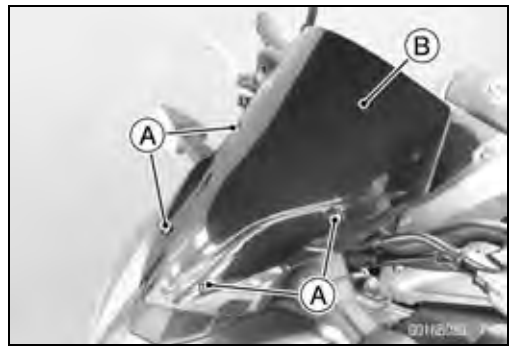

- Remove:
  Windshield Bolts [A] and Washers
  Windshield [B]

Windshield Installation

- Installation is the reverse of removal.
- Tighten:

Torque - Windshield Bolts: 0.50 N·m (0.05 kgf·m, 4.4 in·lb)

Guards

Mud Guard Removal

- Remove:
  Muffler Body (see Muffler Body Removal in the Engine Top chapter)
  Bolt [A]
  Quick Rivet [B]

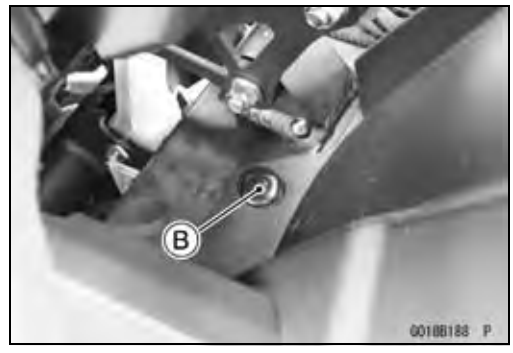

- Remove:
  Bolts [A]
  Mud Guard [B]

Mud Guard Installation

- Installation is the reverse of removal.

Frame Slider Removal (Special Edition Models)

- Remove:
  Frame Slider Cover Bolts [A]
  Frame Slider Cover [B]

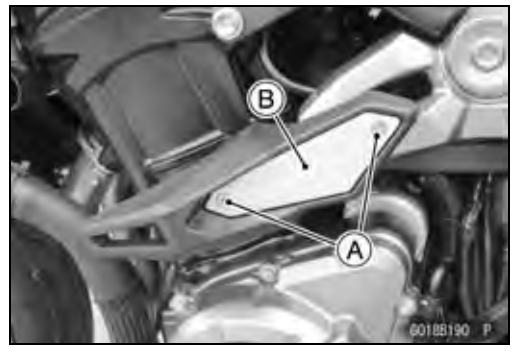

Guards

● Remove:
Middle Front Engine Mounting Bolt [A], Collar and O-ring
Frame Slider Bolt [B], Collar and O-ring
Collar [C]
Frame Slider [D]

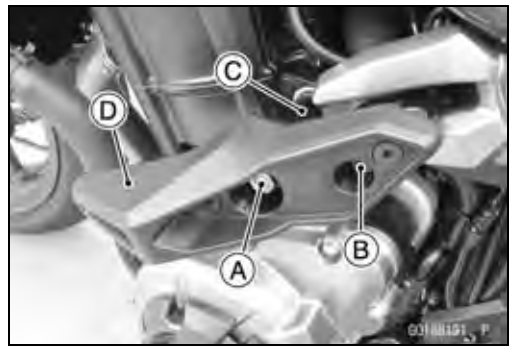

● Remove:
Bolt [A]
Bracket [B]

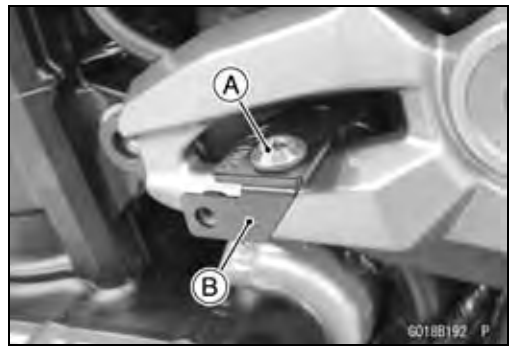

● Remove:
Frame Cover (see Frame Cover Removal)
Bolt [A]
Bracket [B]

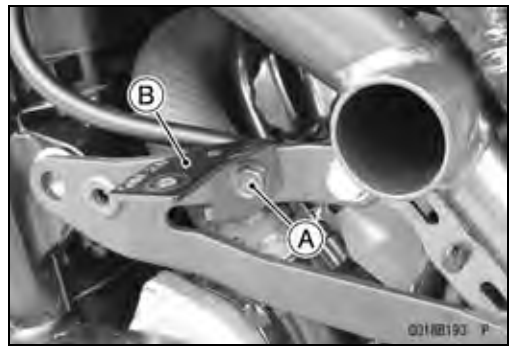

Guards

Frame Slider Installation (Special Edition Models)

- Install the bracket [A], and tighten its bolt [B].
- Install the frame cover (see Frame Cover Installation).
- Apply a non-permanent locking agent to the threads of the bolt [C].
- Install the bracket [D], and tighten the bolt.
- Replace the O-rings [E] with new ones.
- Install:
  O-rings
  Collars [F]
  Frame Slider [G]
- Tighten the frame slider bolt [H] and middle front engine mounting bolt [I].

  Torque - Middle Front Engine Mounting Bolt: 44 N·m (4.5 kgf·m, 32 ft·lb)
- Install the frame slider cover [J].
- Tighten:

  Torque - Frame Slider Cover Bolts [K]: 0.50 N·m (0.05 kgf·m, 4.4 in·lb)

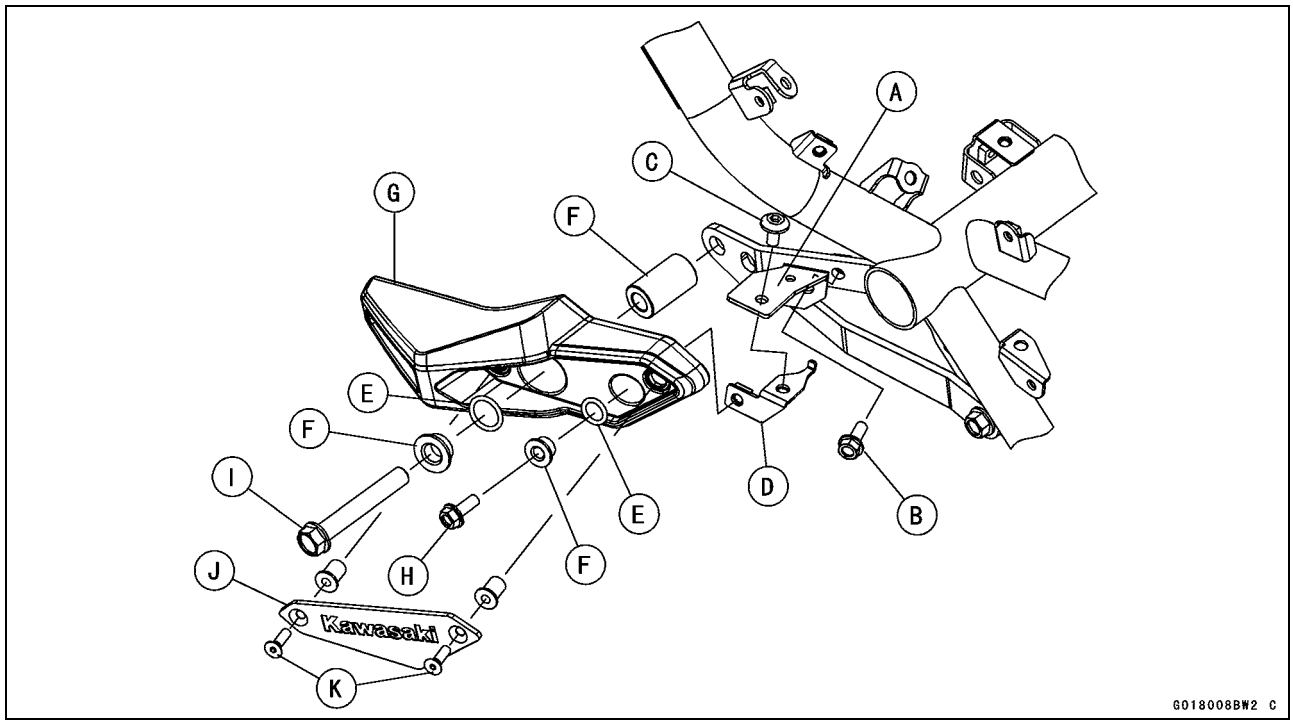

Guards

Crankcase Ring Installation (Special Edition Models)

- Using a high flash-point solvent, clean off any oil or dirt that may be on the crankcase ring sticking positions. Dry them with clean cloth.
- Stick the crankcase rings [A] in places.
  Left Side [B]
  Right Side [C]

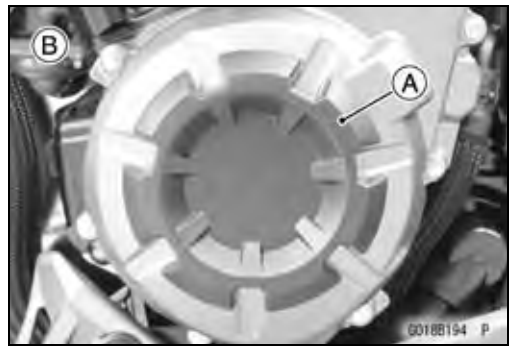

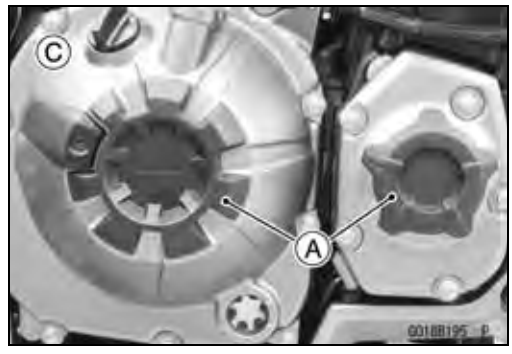

Front Axle Slider Removal (Special Edition Models)

- Using the flat tip screw driver [A], remove the cap [B] on both sides.

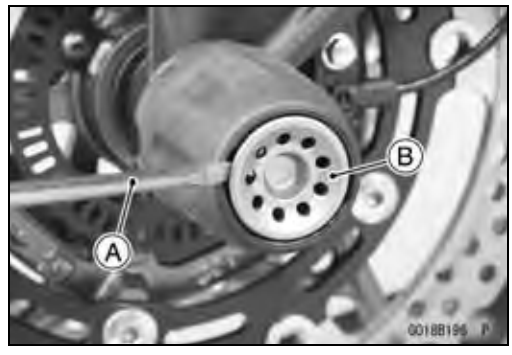

- Remove:
  Front Axle Slider Bolt [A] and Nut
  Washer (Both Sides)
  Front Axle Slider [B] and Collar (Both Sides)

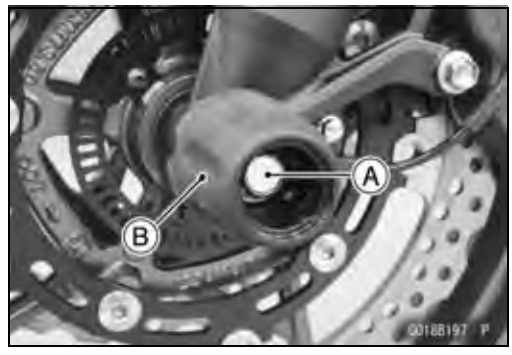

Guards

Front Axle Slider Installation (Special Edition Models)

- Assemble the collars [A] and sliders [B] so that their surfaces [C] are aligned.
  Left Side [D]
  Right Side [E]

○The right side collar has the boss [F].

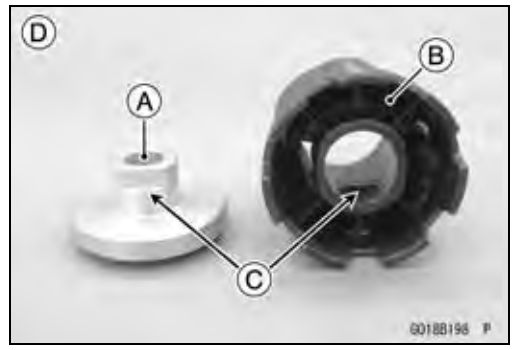

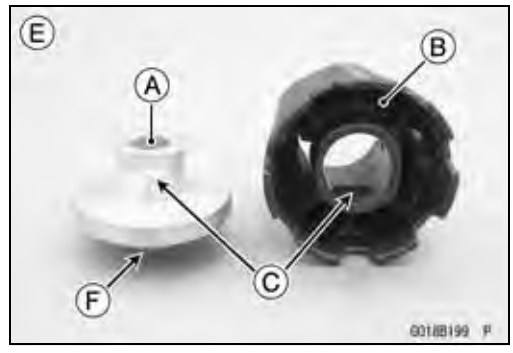

- Replace the front axle slider nut with a new one.
- Install:
  Front Axle Slider [A] and Collar (Both Sides)
  Washer [B] (Both Sides)
  Front Axle Slider Bolt [C] and Nut

○Insert the front axle slider bolt from the left side.

- Tighten:

Torque - Front Axle Slider Nut: 34 N·m (3.5 kgf·m, 25 ft·lb)

- Install the caps.

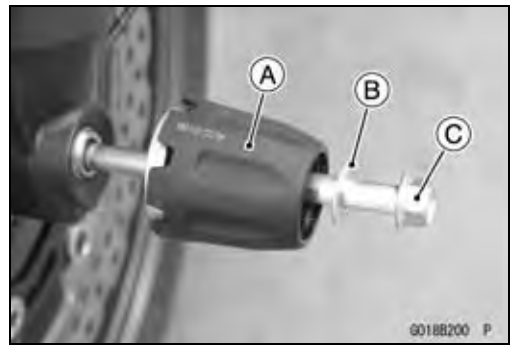

Radiator Guard Removal (Special Edition Models)

- Remove:
  Inner Covers (see Inner Cover Removal)
  Radiator Guard Bolts [A]
  Radiator Guard [B]

NOTICE
Do not touch the radiator core. This could damage the radiator fins, resulting in loss of cooling efficiency.

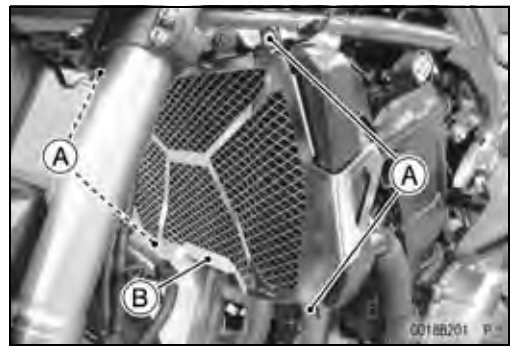

Radiator Guard Installation (Special Edition Models)

- Check that the pads [A] are in place on the radiator guard.
- Install the radiator guard, and tighten its bolts.

Torque - Radiator Guard Bolts: 6.9 N·m (0.70 kgf·m, 61 in·lb)

- Install the removed parts (see appropriate chapters).

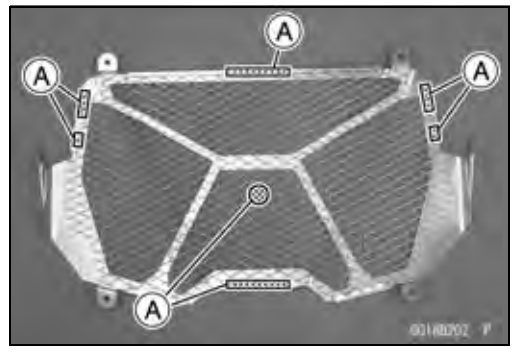

Side Stand

Side Stand Removal

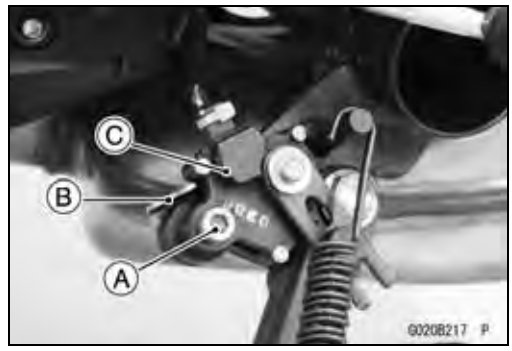

- Remove:
  Side Stand Switch Bolt [A]
  Bracket [B]
  Side Stand Switch [C]
  Dampers
  Collar

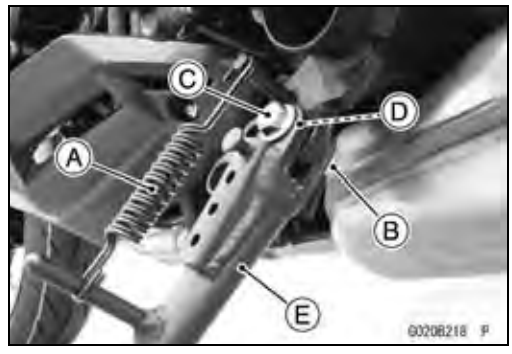

- Remove:
  Spring [A]
  Side Stand Nut [B]
  Side Stand Bolt [C]
  Collar [D]
  Side Stand [E]

Side Stand Installation

- Apply grease to the sliding area [A] of the side stand [B] and collar [C].
- Install:
  Side Stand
  Collar
  Side Stand Bolt [D]
- Tighten:

  Torque - Side Stand Bolt: 44 N·m (4.5 kgf·m, 32 ft·lb)
- Replace the side stand nut [E] with a new one.
- Tighten:

  Torque - Side Stand Nut: 29 N·m (3.0 kgf·m, 21 ft·lb)
- Hook the spring [F] so that the long spring end faces upward.

○Install the spring hook direction as shown.

- Install:
  Dampers [G]
  Collar [H]
  Bracket [I]
  Side Stand Switch [J]
- Apply a non-permanent locking agent to the thread of the side stand switch bolt [K], and tighten it.

  Torque - Side Stand Switch Bolt: 8.8 N·m (0.90 kgf·m, 78 in·lb)

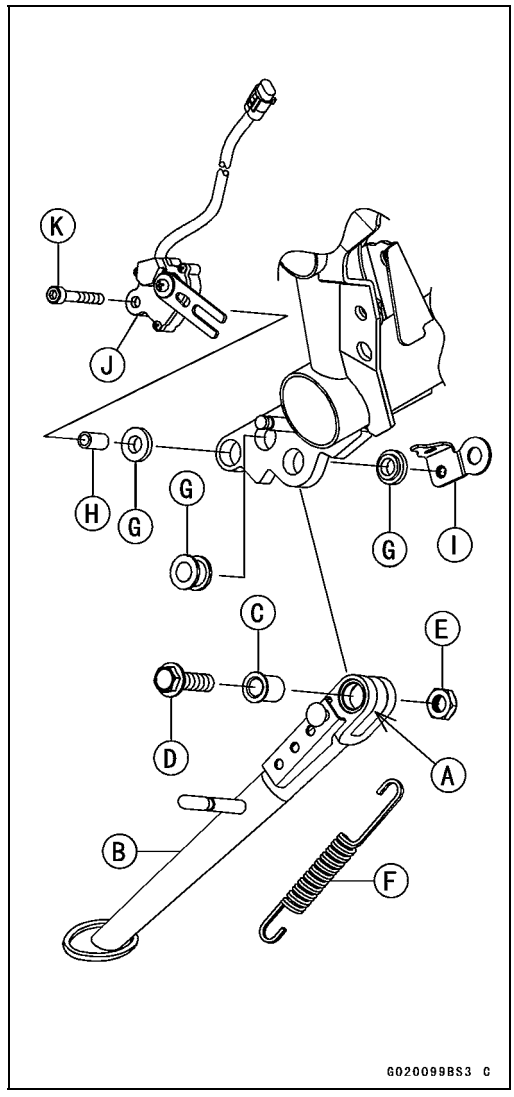

Rear View Mirrors

Rear View Mirror Removal

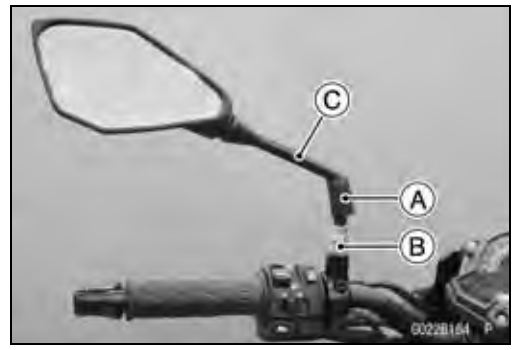

- Slide the dust cover [A].
- Loosen the rear view mirror nut (lower) [B], and remove the rear view mirror [C].

○The rear view mirror locknut (upper) and rear view mirror stay are left-hand thread.

Rear View Mirror Installation

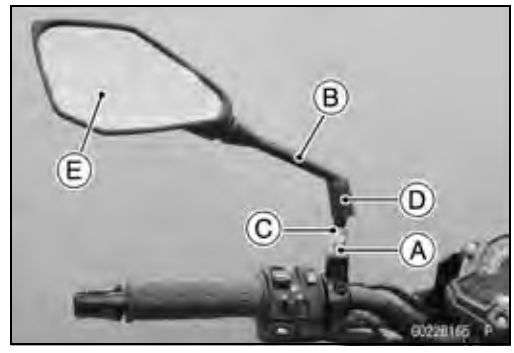

- Tighten the rear view mirror nut (lower) [A].

Torque - Rear View Mirror Nut (Lower): 30 N·m (3.1 kgf·m, 22 ft·lb)

- Tighten the rear view mirror stay [B] until the fully position.
- Adjust the rear view mirror stay to assure the safe conditions of the rear with the rider sitting on the motorcycle.

○The rear view mirror locknut (upper) [C] and rear view mirror stay are left-hand thread.

- Tighten the rear view mirror locknut (upper).

Torque - Rear View Mirror Locknut (Upper): 18 N·m (1.8 kgf·m, 13 ft·lb)

- Install the dust cover [D].
- Adjust the rear view mirror [E] by slightly moving only the mirror portion of the assembly.

○Installation and adjustment of the right side are common with those of the left side. Follow the procedure specified at the left side.

Electrical System

Table of Contents

Exploded View 16-4
Specifications 16-10
Special Tools and Sealant 16-11
Parts Location 16-13
Wiring Diagram (ZR900A without Immobilizer Models) 16-16
Wiring Diagram (ZR900A with Immobilizer Models) 16-18
Wiring Diagram (ZR900B without Immobilizer Models) 16-20
Wiring Diagram (ZR900B with Immobilizer Models) 16-22
Precautions 16-24
Electrical Wiring 16-25
  Wiring Inspection 16-25
Battery 16-26
  Battery Removal 16-26
  Battery Installation 16-26
  Battery Activation 16-26
  Precautions 16-29
  Interchange 16-30
  Charging Condition Inspection 16-30
  Refreshing Charge 16-30
Charging System 16-32
  Alternator Cover Removal 16-32
  Alternator Cover Installation 16-32
  Stator Coil Removal 16-33
  Stator Coil Installation 16-33
  Alternator Rotor Removal 16-33
  Alternator Rotor Installation 16-34
  Charging Voltage Inspection 16-36
  Alternator Inspection 16-36
  Regulator/Rectifier Removal 16-38
  Regulator/Rectifier Installation 16-38
  Regulator/Rectifier Inspection 16-38
Ignition System 16-41
  Crankshaft Sensor Removal 16-41
  Crankshaft Sensor Installation 16-42
  Crankshaft Sensor Inspection 16-44
  Crankshaft Sensor Peak Voltage Inspection 16-44
  Timing Rotor Removal 16-45
  Timing Rotor Installation 16-45
  Stick Coil Removal 16-45
  Stick Coil Installation 16-45
  Stick Coil Inspection 16-46
  Stick Coil Primary Peak Voltage Inspection 16-46
  Spark Plug Removal 16-47
  Spark Plug Installation 16-47
  Spark Plug Condition Inspection 16-47
  Interlock Operation Inspection 16-48
  IC Igniter Inspection 16-48
Electric Starter System 16-51
  Starter Motor Removal 16-51
  Starter Motor Installation 16-51

Starter Motor Disassembly 16-51
Starter Motor Assembly 16-52
Brush Inspection 16-54
Commutator Cleaning and Inspection 16-54
Armature Inspection 16-55
Brush Lead Inspection 16-55
Right-hand End Cover Inspection 16-55
Starter Relay Inspection 16-55
Lighting System 16-58
Headlight Beam Horizontal Adjustment 16-58
Headlight Beam Vertical Adjustment 16-58
Headlight Bulb Replacement 16-58
Headlight Unit Removal 16-59
Headlight Unit Installation 16-59
City Light Bulb Replacement 16-59
Tail/Brake Light (LED) Unit Removal 16-60
Tail/Brake Light (LED) Unit Installation 16-60
License Plate Light Bulb Replacement 16-61
Turn Signal Light Bulb Replacement 16-62
Turn Signal Relay Inspection 16-63
Air Switching Valve 16-66
Air Switching Valve Operation Test 16-66
Air Switching Valve Unit Test 16-66
Radiator Fan System 16-68
Fan Motor Inspection 16-68
Meter, Gauge, Indicator Unit 16-69
Meter Unit Removal 16-69
Meter Unit Installation 16-69
Meter Unit Disassembly/Assembly 16-69
Meter Operation Inspection 16-70
Meter System Inspection 16-72
Meter Unit Inspection 16-73
Fuel Level Sensor Line Self-Diagnosis Mode Inspection 16-80
Immobilizer System (Equipped Models) 16-83
Operational Cautions 16-83
Key Registration 16-83
Immobilizer System Parts Replacement 16-101
Immobilizer Amplifier Replacement 16-102
Immobilizer System Inspection 16-103
Switches and Sensors 16-105
Brake Light Timing Inspection 16-105
Brake Light Timing Adjustment 16-105
Switch Inspection 16-105
Water Temperature Sensor Inspection 16-106
Oxygen Sensor Removal 16-106
Oxygen Sensor Installation 16-107
Oxygen Sensor Inspection 16-107
Fuel Level Sensor Inspection 16-107
Gear Position Sensor Removal 16-108
Gear Position Sensor Installation 16-108
Gear Position Sensor Inspection 16-109
Accessory Socket Removal/Installation (Special Edition Models) 16-109
Relay Box 16-110
Relay Box Removal/Installation 16-110
Relay Circuit Inspection 16-110
Diode Circuit Inspection 16-111
Fuse 16-113

30 A Main/15 A ECU Fuse Removal..... 16-113
Fuse Box Fuse Removal..... 16-113
Fuse Installation..... 16-113
Fuse Inspection..... 16-113

Exploded View

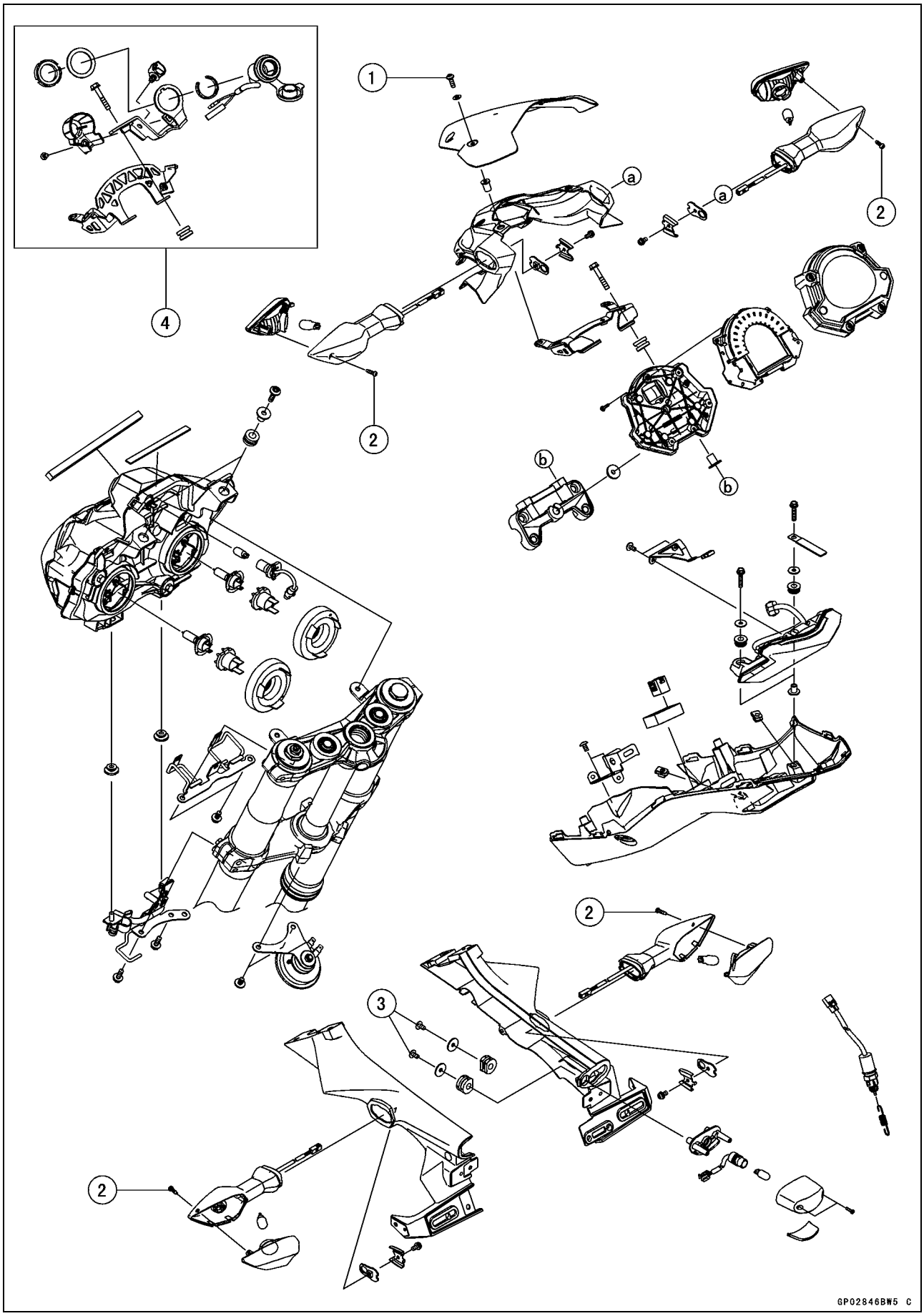

Exploded View

No.	Fastener	Torque			Remarks
		N·m	kgf·m	ft·lb	
1	Meter Cover Bolts	0.50	0.05	4.4 in·lb	
2	Turn Signal Light Lens Screws	1.0	0.10	8.9 in·lb	
3	License Plate Light Screws	1.2	0.12	11 in·lb	

4. Special Edition Models

Exploded View

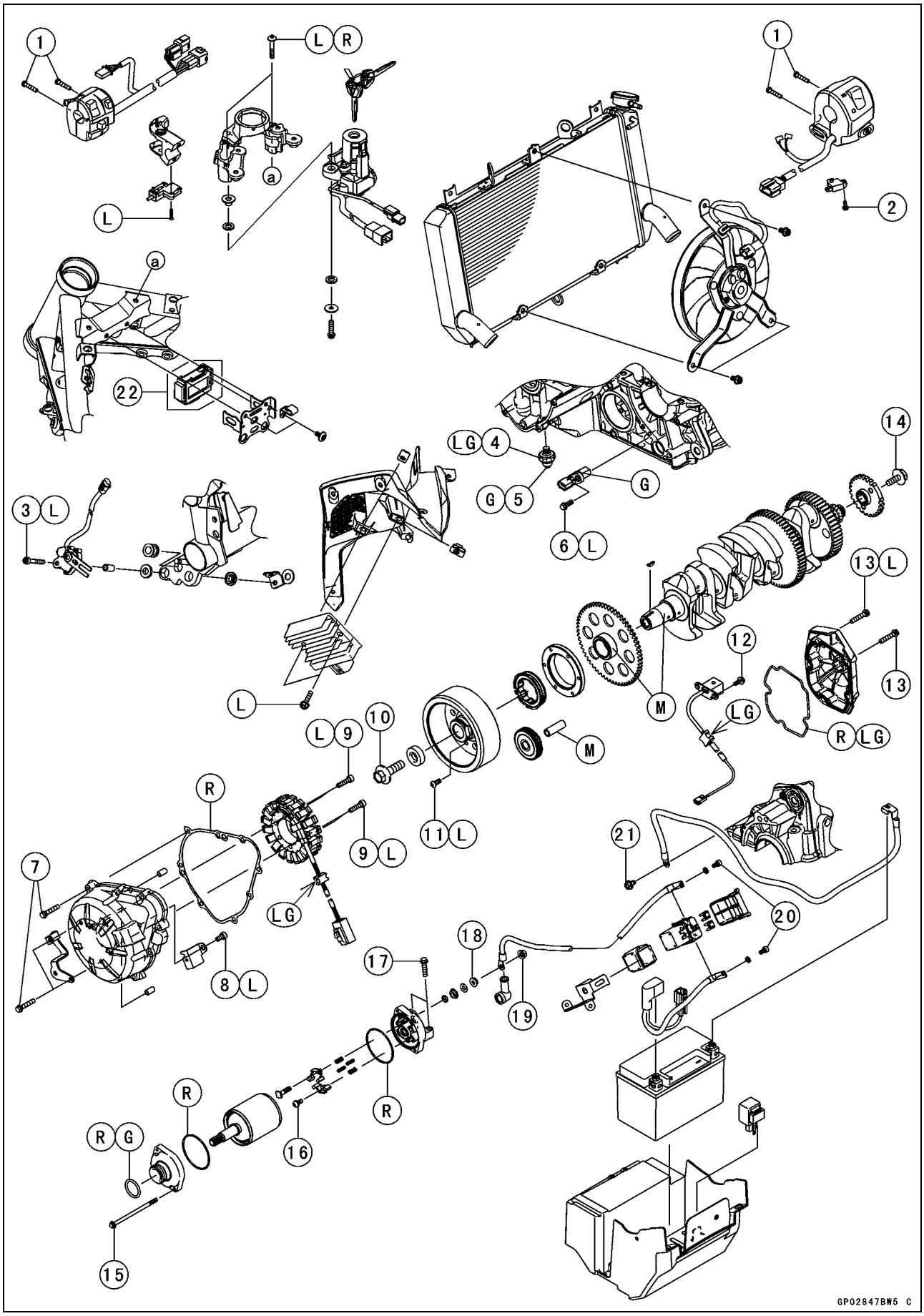

Exploded View

No.	Fastener	Torque			Remarks
		N·m	kgf·m	ft·lb	
1	Switch Housing Screws	3.5	0.36	31 in·lb	
2	Front Brake Light Switch Screw	1.2	0.12	11 in·lb	
3	Side Stand Switch Bolt	8.8	0.90	78 in·lb	L
4	Oil Pressure Switch	15	1.5	11	LG
5	Oil Pressure Switch Terminal Bolt	2.0	0.20	18 in·lb	G
6	Gear Position Sensor Bolt	10	1.0	89 in·lb	L
7	Alternator Cover Bolts	12	1.2	106 in·lb	
8	Alternator Lead Holding Plate Bolt	12	1.2	106 in·lb	L
9	Stator Coil Bolts	12	1.2	106 in·lb	L
10	Alternator Rotor Bolt	155	15.8	114	
11	Starter Motor Clutch Bolts	12	1.2	106 in·lb	L
12	Crankshaft Sensor Bolts	6.0	0.61	53 in·lb	
13	Crankshaft Sensor Cover Bolts	12	1.2	106 in·lb	L (1)
14	Timing Rotor Bolt	39	4.0	29	
15	Starter Motor Through Bolts	5.0	0.51	44 in·lb	
16	Brush Holder Screw	3.8	0.39	34 in·lb	
17	Starter Motor Mounting Bolts	9.8	1.0	87 in·lb	
18	Starter Motor Terminal Locknut	11	1.1	97 in·lb	
19	Starter Motor Cable Terminal Nut	5.9	0.60	52 in·lb	
20	Starter Relay Terminal Bolts	3.9	0.40	35 in·lb	
21	Engine Ground Cable Terminal Bolt	10	1.0	89 in·lb	

22. Immobilizer System Equipped Models
G: Apply grease.
L: Apply a non-permanent locking agent.
LG: Apply liquid gasket.
M: Apply molybdenum disulfide grease.
R: Replacement Parts

Exploded View

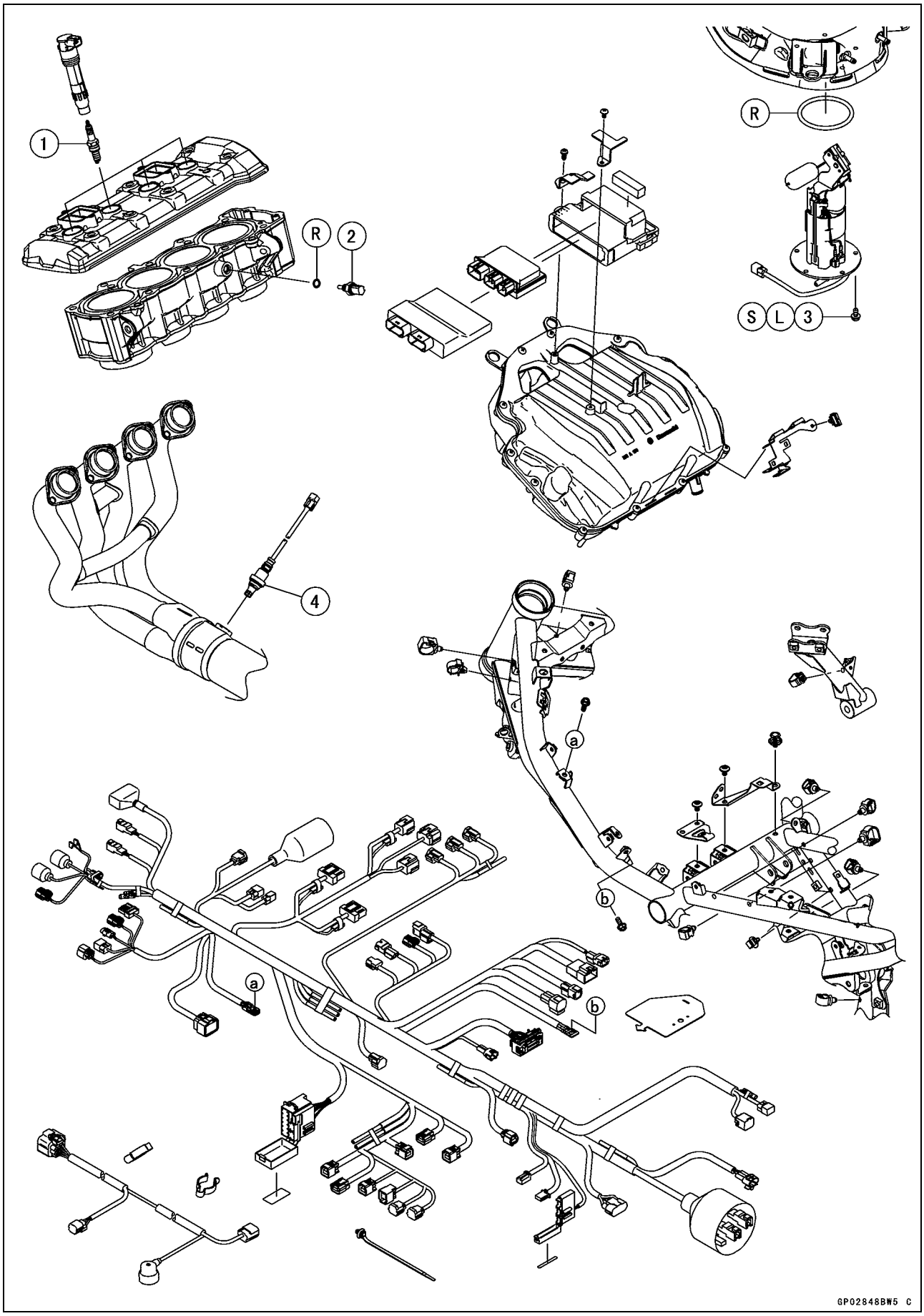

Exploded View

No.	Fastener	Torque			Remarks
		N·m	kgf·m	ft·lb	
1	Spark Plugs	13	1.3	115 in·lb	
2	Water Temperature Sensor	12	1.2	106 in·lb	
3	Fuel Pump Bolts	9.8	1.0	87 in·lb	L, S
4	Oxygen Sensor	44	4.5	32	

L: Apply a non-permanent locking agent.
R: Replacement Parts
S: Follow the specified tightening sequence.

Specifications

Item	Standard
Battery	
Type	Sealed Battery
Model Name	FTX9-BS
Capacity	12 V 8 Ah (10 HR)
Voltage	12.6 V or more
Gross Weight	3.0 kg (6.6 lb)
Electrolyte Volume	0.41 L (25 cu in.)
Charging System	
Type	Three-phase AC
Charging Voltage (Regulator/Rectifier Output Voltage)	14.5 ~ 14.9 V @25°C (77°F)
Alternator Output Voltage	AC 41.6 ~ 62.4 V @4 000 r/min (rpm)
Stator Coil Resistance	0.176 ~ 0.264 Ω @20°C (68°F)
Ignition System	
Spark Plug:	
Type	NGK CR9EIA-9
Gap	0.8 ~ 0.9 mm (0.031 ~ 0.035 in.)
Stick Coil:	
Primary Winding Resistance	1.11 ~ 1.50 Ω @20°C (68°F)
Secondary Winding Resistance	6.4 ~ 9.6 kΩ @20°C (68°F)
Primary Peak Voltage	95 V or more
Crankshaft Sensor:	
Resistance	376 ~ 564 Ω @20°C (68°F)
Peak Voltage	3.0 V or more
Electric Starter System	
Starter Motor:	
Brush Length	12 mm (0.47 in.) [Service Limit: 6.5 mm (0.26 in.)]
Air Switching Valve	
Resistance	20 ~ 24 Ω @20°C (68°F)
Switches and Sensors	
Rear Brake Light Switch Timing	ON after about 6 mm (0.24 in.) of pedal travel
Engine Oil Pressure Switch Connections	When engine is stopped: ON When engine is running: OFF
Water Temperature Sensor Resistance	in the text
Fuel Level Sensor Resistance:	
Full Position	9.6 ~ 12.4 Ω
Empty Position	222 ~ 228 Ω

Special Tools and Sealant

Peak Voltage Adapter:
57001-1415

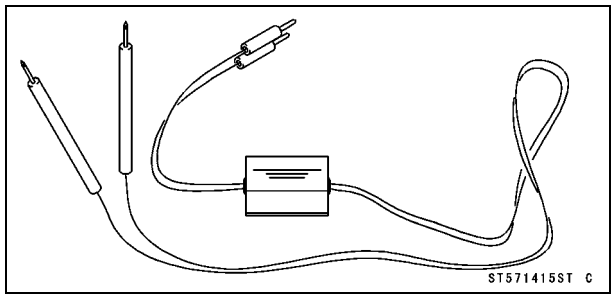

Lead Wire - Peak Voltage Adapter:
57001-1449

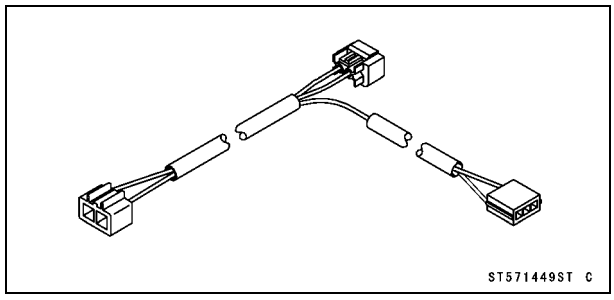

Needle Adapter Set:
57001-1457

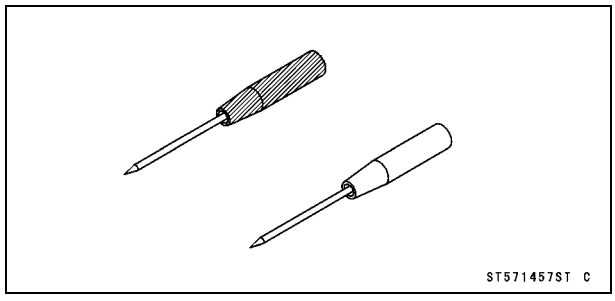

Key Registration Unit:
57001-1582

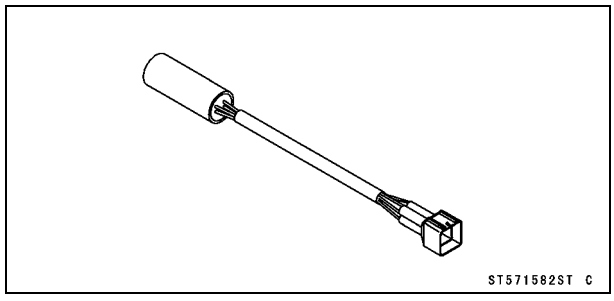

Grip:
57001-1591

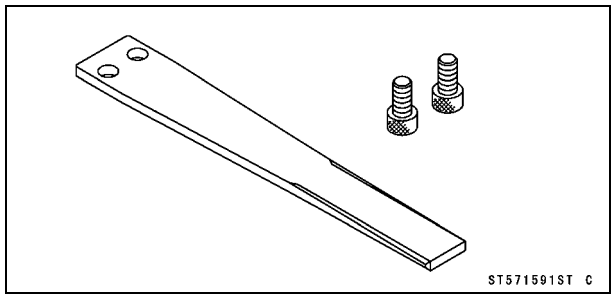

Flywheel & Pulley Holder:
57001-1605

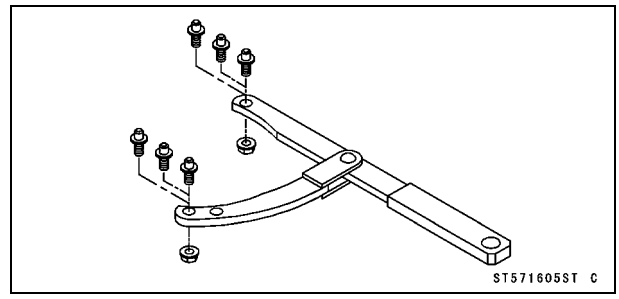

Flywheel Puller Assembly, M38 × 1.5/M35 × 1.5:
57001-1615

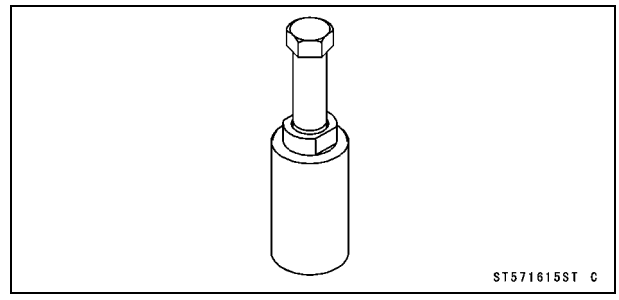

Stopper:
57001-1679

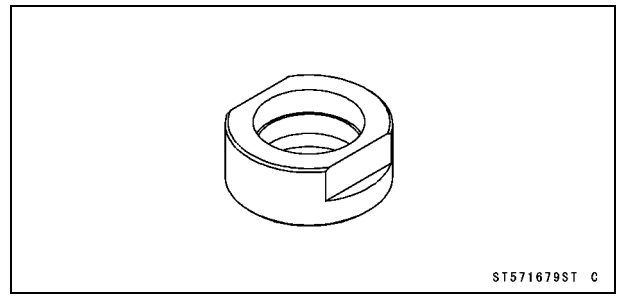

Rotor Holder:
57001-1690

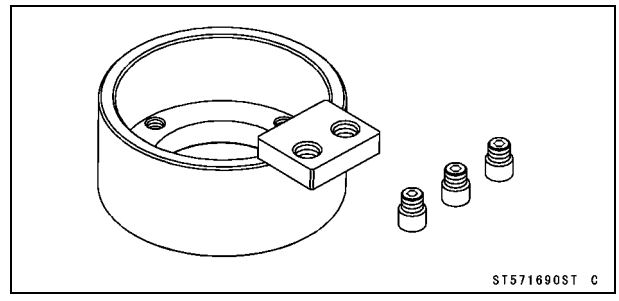

Key Registration Adapter:
57001-1746

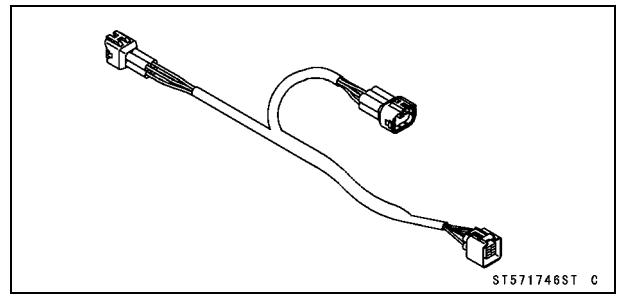

Special Tools and Sealant

Liquid Gasket, TB1211F:
92104-0004

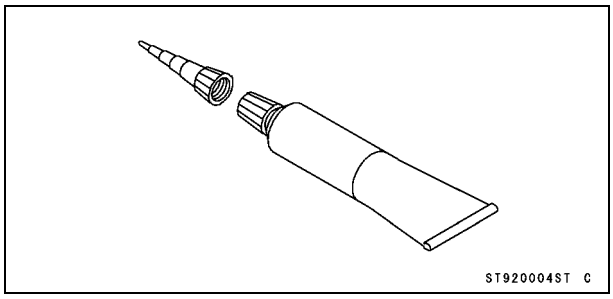

Parts Location

Timing Rotor [A]
Crankshaft Sensor [B]
Oxygen Sensor [C]

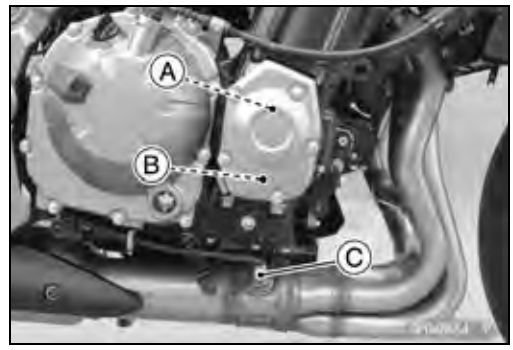

Alternator [A]
Oil Pressure Switch [B]
Gear Position Sensor [C]
Side Stand Switch [D]

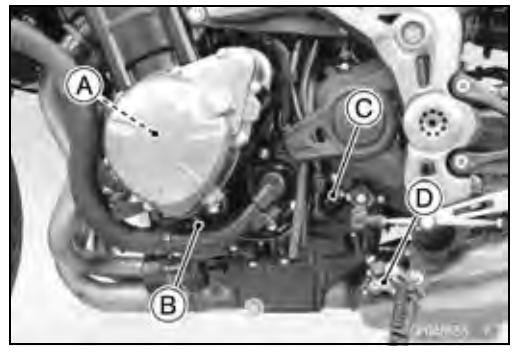

Radiator Fan Motor [A]
Water Temperature Sensor [B]
Starter Motor [C]

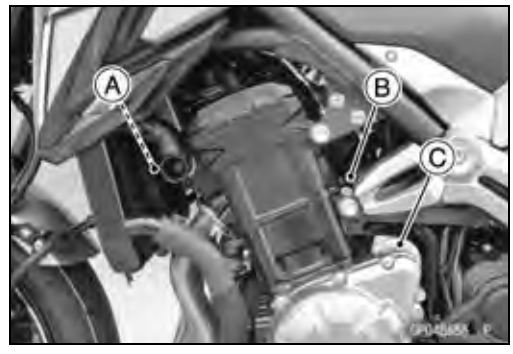

Horn [A]
Regulator/Rectifier [B]
Fuse Box (1) [C]

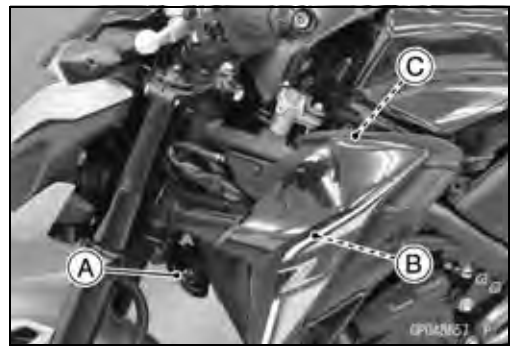

Rear Brake Light Switch [A]

Parts Location

Immobilizer (Immobilizer Equipped Models)/Kawasaki Diagnostic System Connector [A]
Fuse Box (2) [B]
Battery 12 V 8 Ah [C]
Turn Signal Relay [D]
Starter Relay [E]

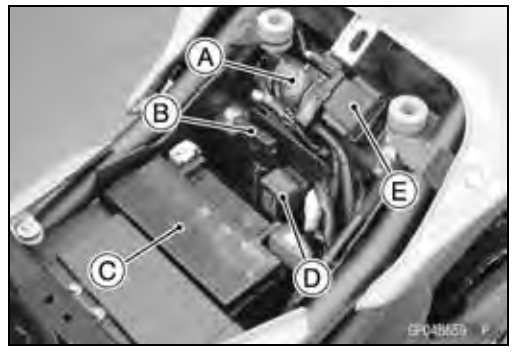

Relay Box [A]
ECU [B]

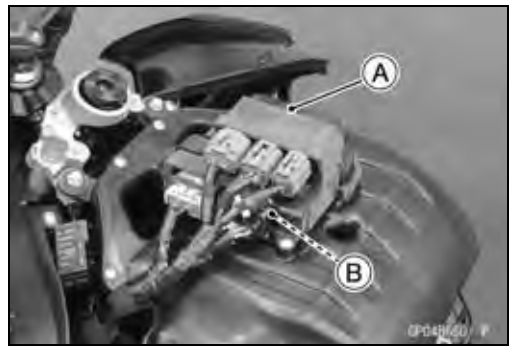

Air Switching Valve [A]
Stick Coils [B]
Spark Plugs [C]
Immobilizer Amplifier (Immobilizer Equipped Models) [D]

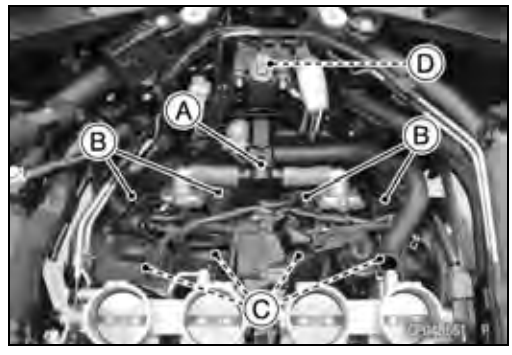

Starter Lockout Switch [A]
Ignition Switch [B] (Immobilizer Equipped Models: Including Immobilizer Antenna)
Meter Unit [C]
Front Brake Light Switch [D]

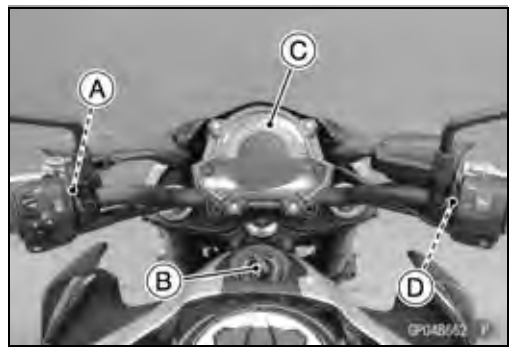

Parts Location

This page intentionally left blank.

Wiring Diagram (ZR900A without Immobilizer Models)

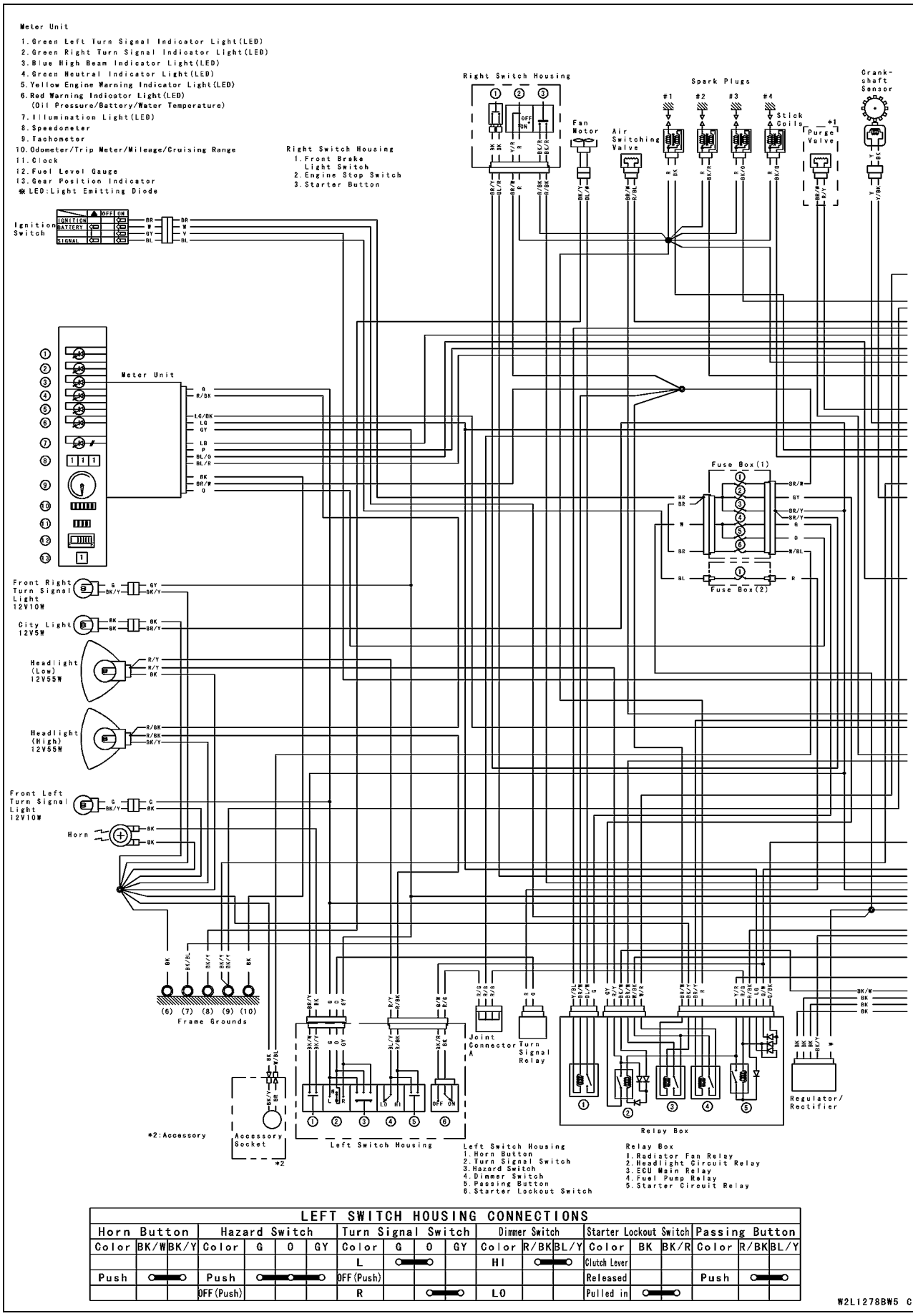

LEFT SWITCH HOUSING CONNECTIONS

Horn Button			Hazard Switch				Turn Signal Switch				Dimmer Switch			Starter Lockout Switch			Passing Button		
Color	BK/W	BK/Y	Color	G	O	GY	Color	G	O	GY	Color	R/BK	BL/Y	Color	BK	BK/R	Color	R/BK	BL/Y
							L	●		○	HI	○		Clutch Lever					
Push	○	●	Push	○	●	○	OFF(Push)							Released			Push	○	●
			OFF(Push)				R		○	●	LO			Pulled in	○	●			

W2L1278BW5 C

Wiring Diagram (ZR900A without Immobilizer Models)

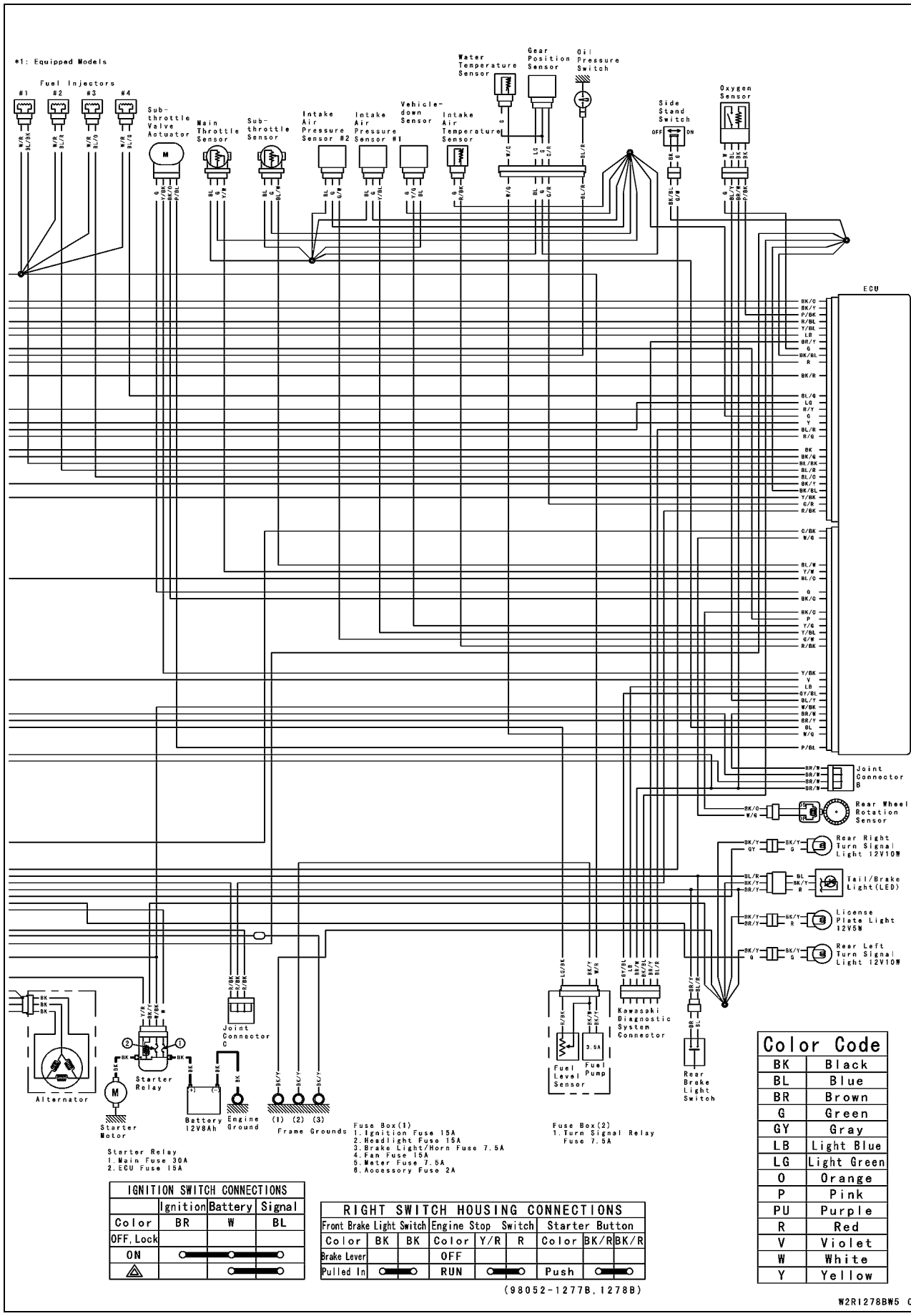

IGNITION SWITCH CONNECTIONS			
	Ignition	Battery	Signal
Color	BR	W	BL
OFF, Lock			
ON	○	●	○
△		●	○

RIGHT SWITCH HOUSING CONNECTIONS								
Front Brake Light Switch			Engine Stop Switch			Starter Button		
Color	BK	BK	Color	Y/R	R	Color	BK/R	BK/R
Brake Lever			OFF					
Pulled In	○	●	RUN	●	○	Push	●	○

Color Code	
BK	Black
BL	Blue
BR	Brown
G	Green
GY	Gray
LB	Light Blue
LG	Light Green
O	Orange
P	Pink
PU	Purple
R	Red
V	Violet
W	White
Y	Yellow

Wiring Diagram (ZR900A with Immobilizer Models)

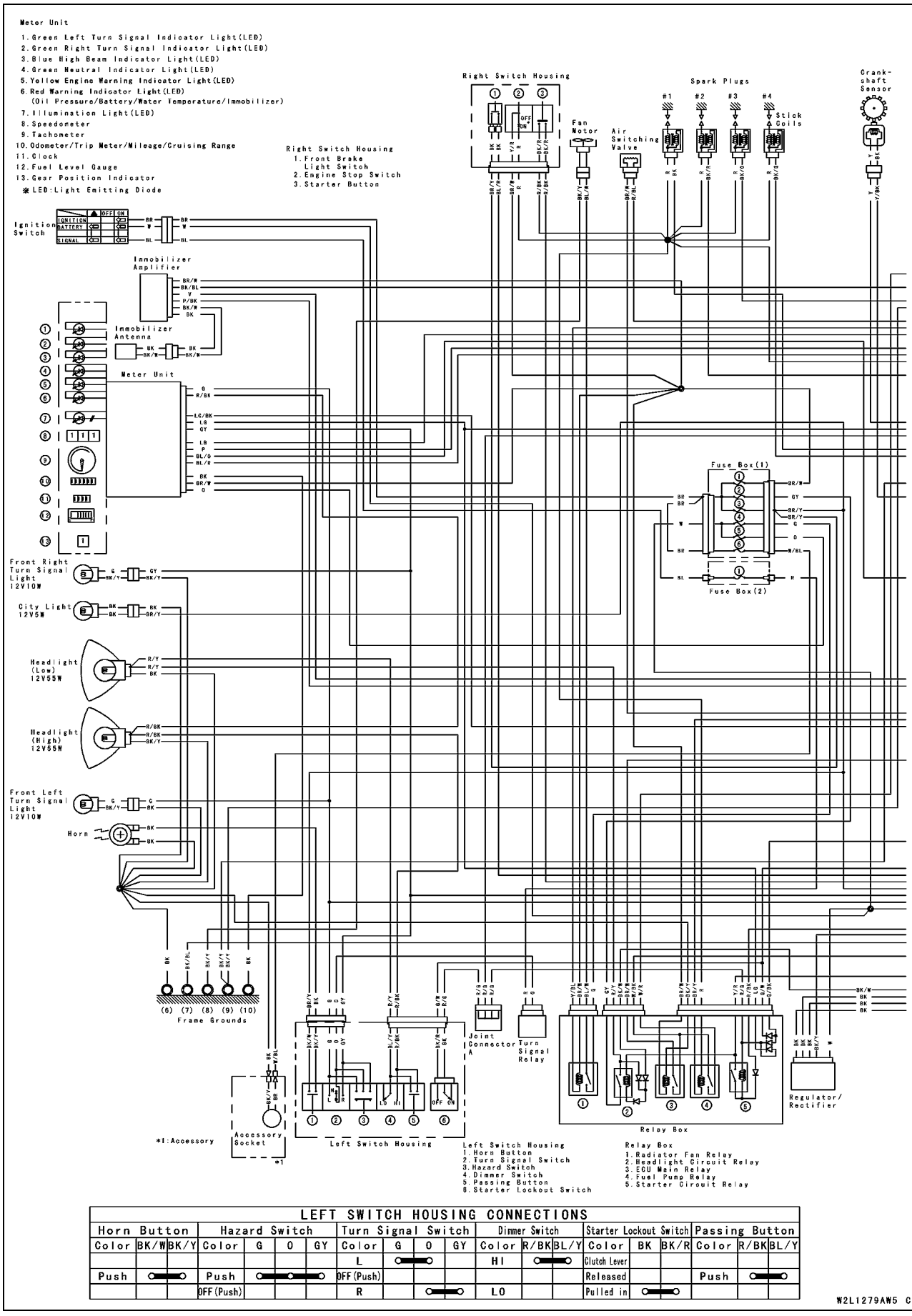

LEFT SWITCH HOUSING CONNECTIONS

Horn Button			Hazard Switch				Turn Signal Switch				Dimmer Switch			Starter Lockout Switch			Passing Button		
Color	BK/W	BK/Y	Color	G	O	GY	Color	G	O	GY	Color	R/BK	BL/Y	Color	BK	BK/R	Color	R/BK	BL/Y
							L	●			HI	●		Clutch Lever					
Push		●	Push	●	●	●	OFF(Push)							Released			Push	●	
			OFF(Push)				R		●		LO			Pulled in	●				

W2L1279AW5 C

Wiring Diagram (ZR900A with Immobilizer Models)

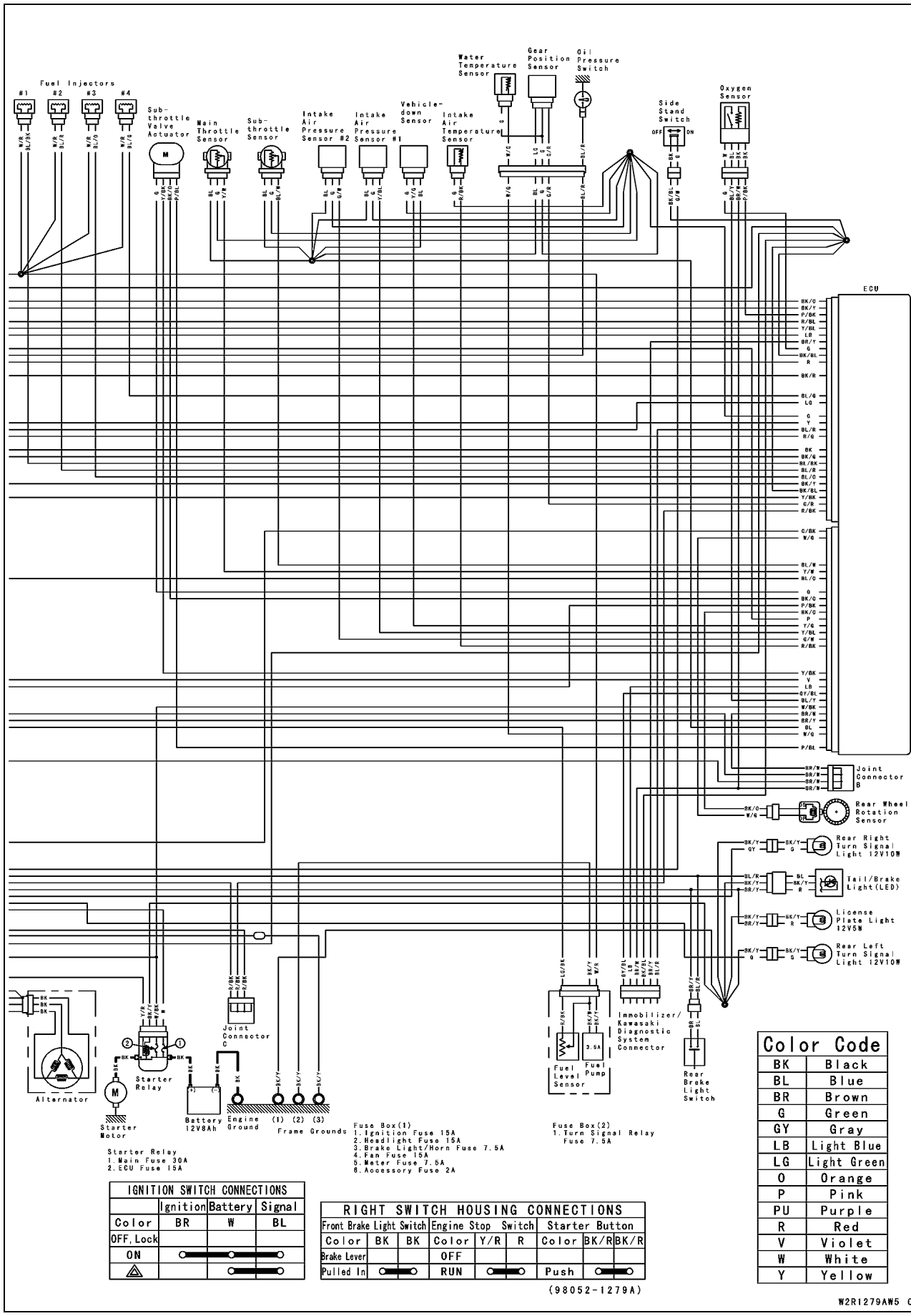

IGNITION SWITCH CONNECTIONS			
	Ignition	Battery	Signal
Color	BR	W	BL
OFF, Lock			
ON	○	●	○
△		●	○

RIGHT SWITCH HOUSING CONNECTIONS								
Front Brake Light Switch			Engine Stop Switch			Starter Button		
Color	BK	BK	Color	Y/R	R	Color	BK/R	BK/R
Brake Lever			OFF					
Pulled In	○	●	RUN	●	○	Push	●	○

Color Code	
BK	Black
BL	Blue
BR	Brown
G	Green
GY	Gray
LB	Light Blue
LG	Light Green
O	Orange
P	Pink
PU	Purple
R	Red
V	Violet
W	White
Y	Yellow

Wiring Diagram (ZR900B without Immobilizer Models)

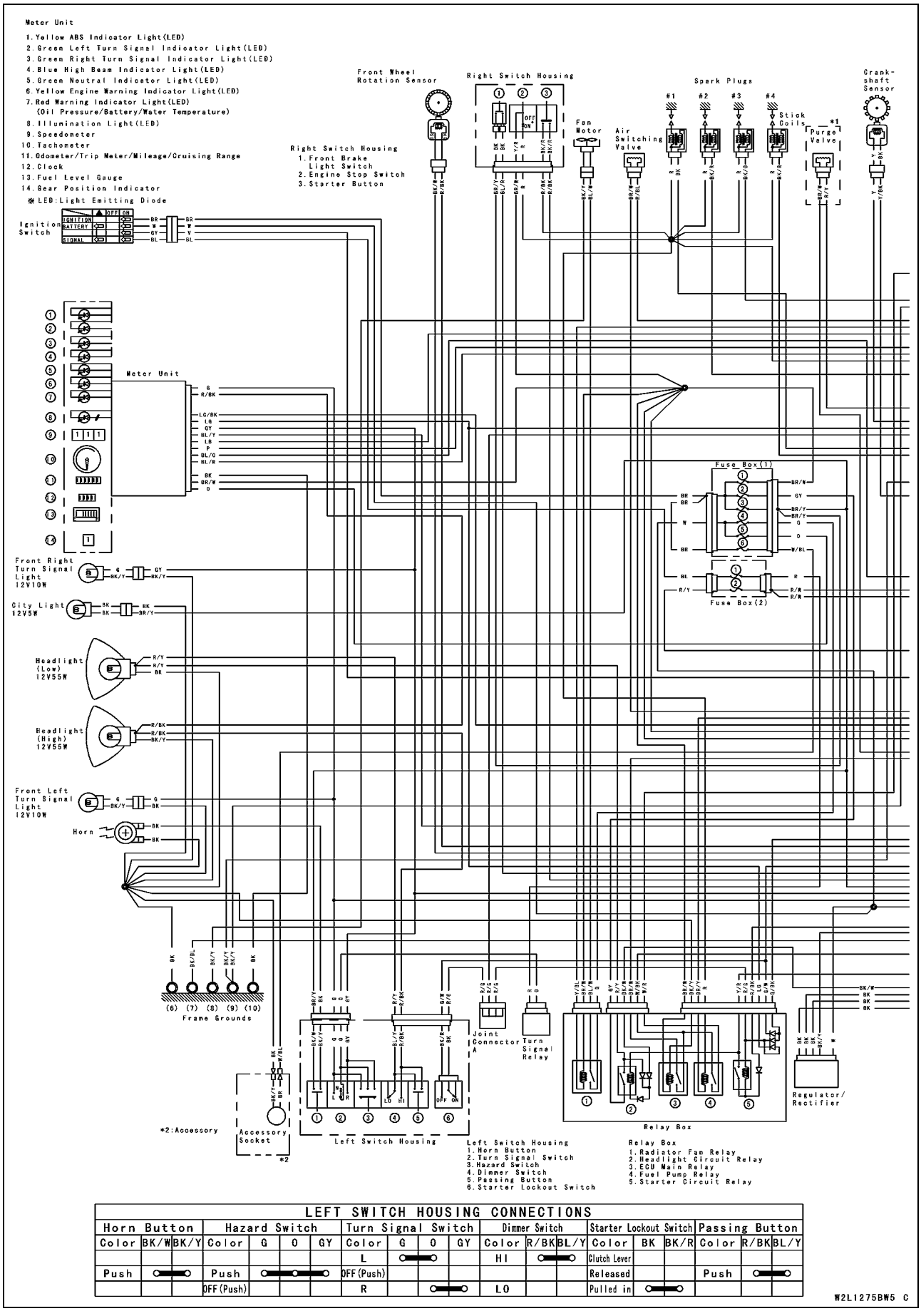

LEFT SWITCH HOUSING CONNECTIONS

Horn Button			Hazard Switch				Turn Signal Switch				Dimmer Switch			Starter Lockout Switch			Passing Button		
Color	BK/W	BK/Y	Color	G	O	GY	Color	G	O	GY	Color	R/BK	BL/Y	Color	BK	BK/R	Color	R/BK	BL/Y
							L		●		HI		●	Clutch Lever					
Push		●	Push		●	●	OFF(Push)							Released			Push		●
			OFF(Push)				R			●	LO			Pulled in		●			

W2L1275BW5 C

Wiring Diagram (ZR900B without Immobilizer Models)

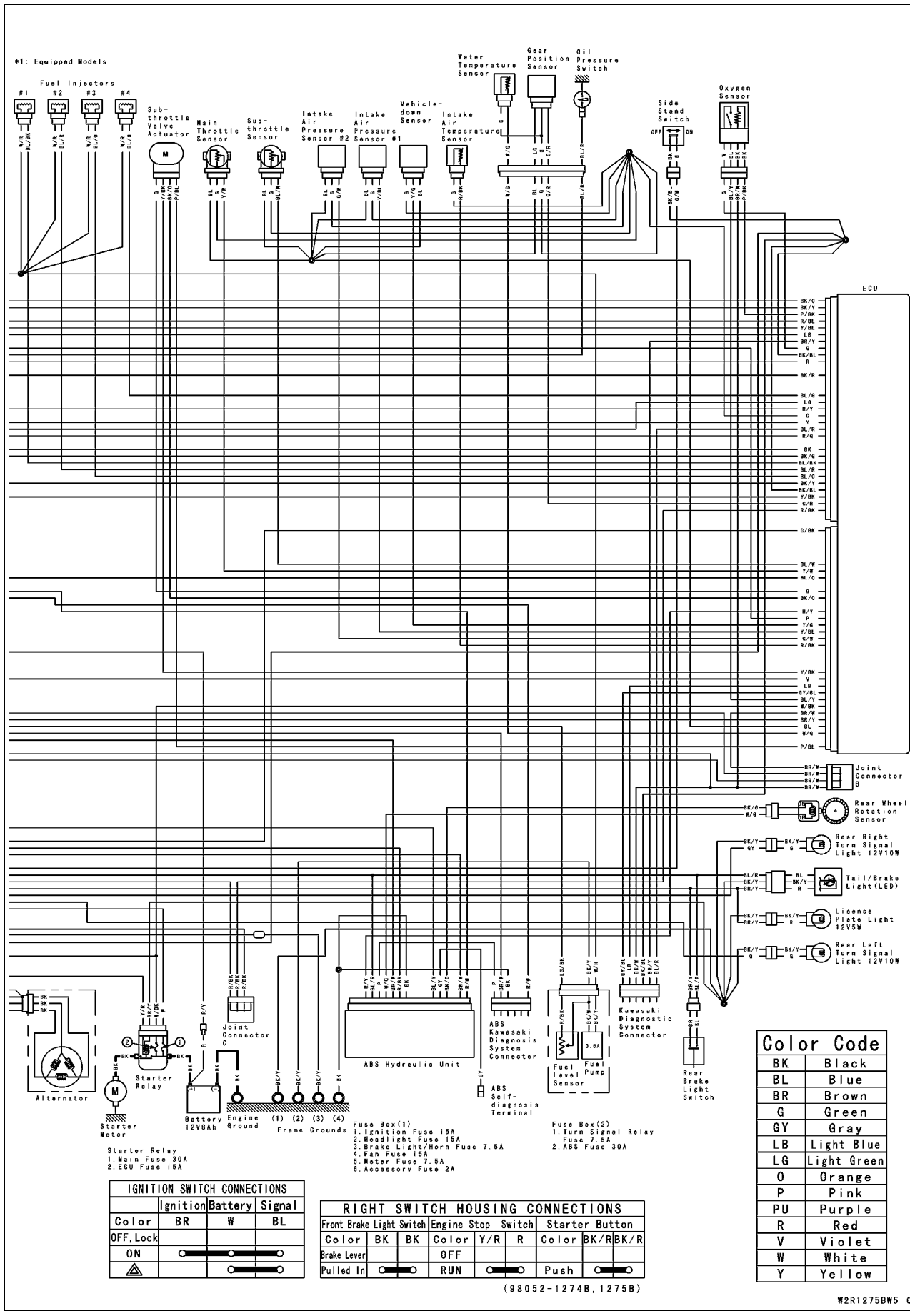

IGNITION SWITCH CONNECTIONS			
	Ignition	Battery	Signal
Color	BR	W	BL
OFF, Lock			
ON	○	●	○
△		●	○

RIGHT SWITCH HOUSING CONNECTIONS								
Front Brake Light Switch			Engine Stop Switch			Starter Button		
Color	BK	BK	Color	Y/R	R	Color	BK/R	BK/R
Brake Lever			OFF					
Pulled In	○	○	RUN	○	○	Push	○	○

Color Code	
BK	Black
BL	Blue
BR	Brown
G	Green
GY	Gray
LB	Light Blue
LG	Light Green
O	Orange
P	Pink
PU	Purple
R	Red
V	Violet
W	White
Y	Yellow

(98052-1274B, 1275B)

W2R1275BW5 C

Wiring Diagram (ZR900B with Immobilizer Models)

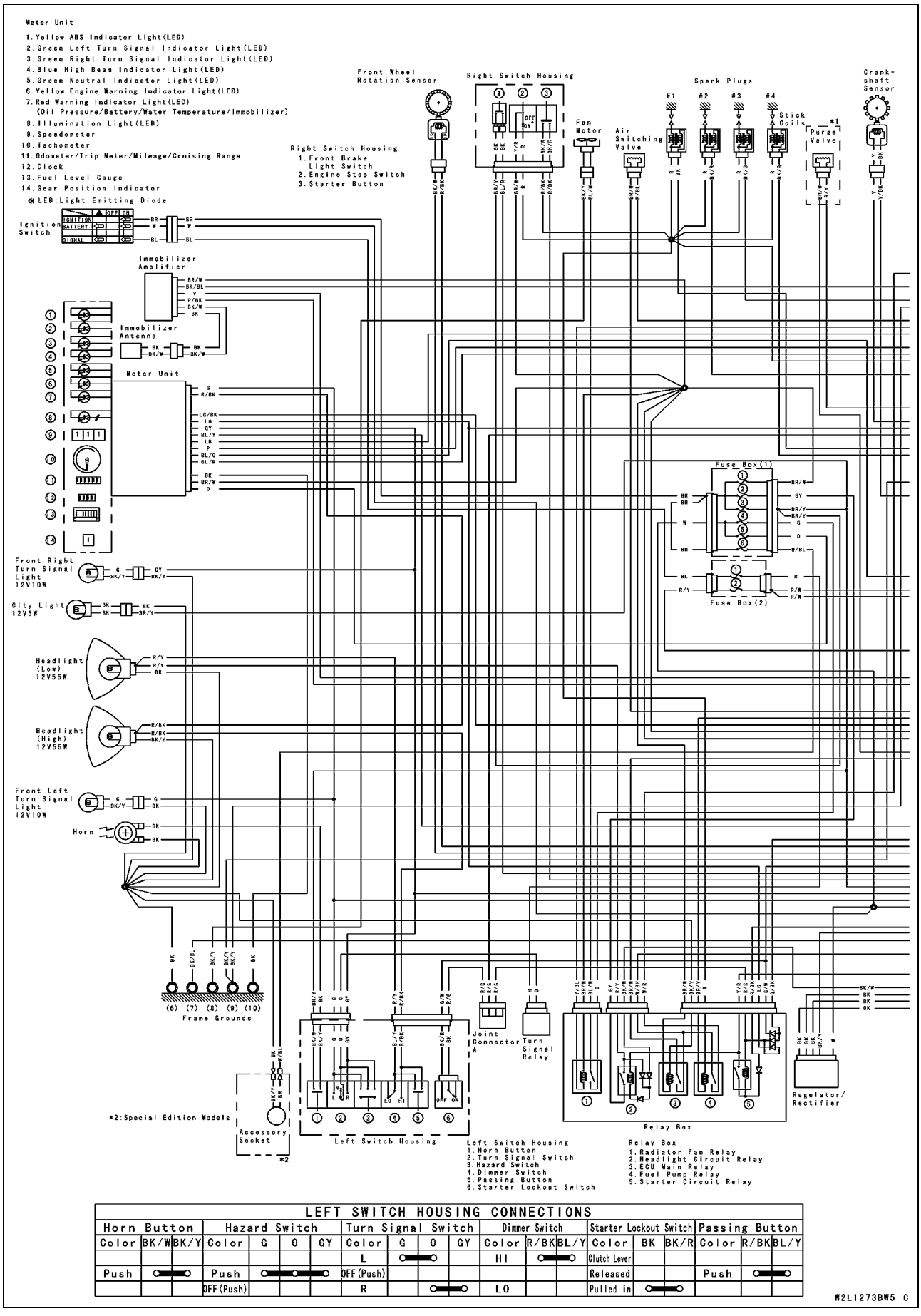

LEFT SWITCH HOUSING CONNECTIONS

Horn Button			Hazard Switch				Turn Signal Switch				Dimmer Switch			Starter Lockout Switch			Passing Button		
Color	BK/W	BK/Y	Color	G	O	GY	Color	G	O	GY	Color	R/BK	BL/Y	Color	BK	BK/R	Color	R/BK	BL/Y
							L	●	●		HI	●		Clutch Lever					
Push	●	●	Push	●	●	●	OFF(Push)							Released			Push	●	
			OFF(Push)				R		●	●	LO			Pulled in	●				

W2L1273BW5 C

Wiring Diagram (ZR900B with Immobilizer Models)

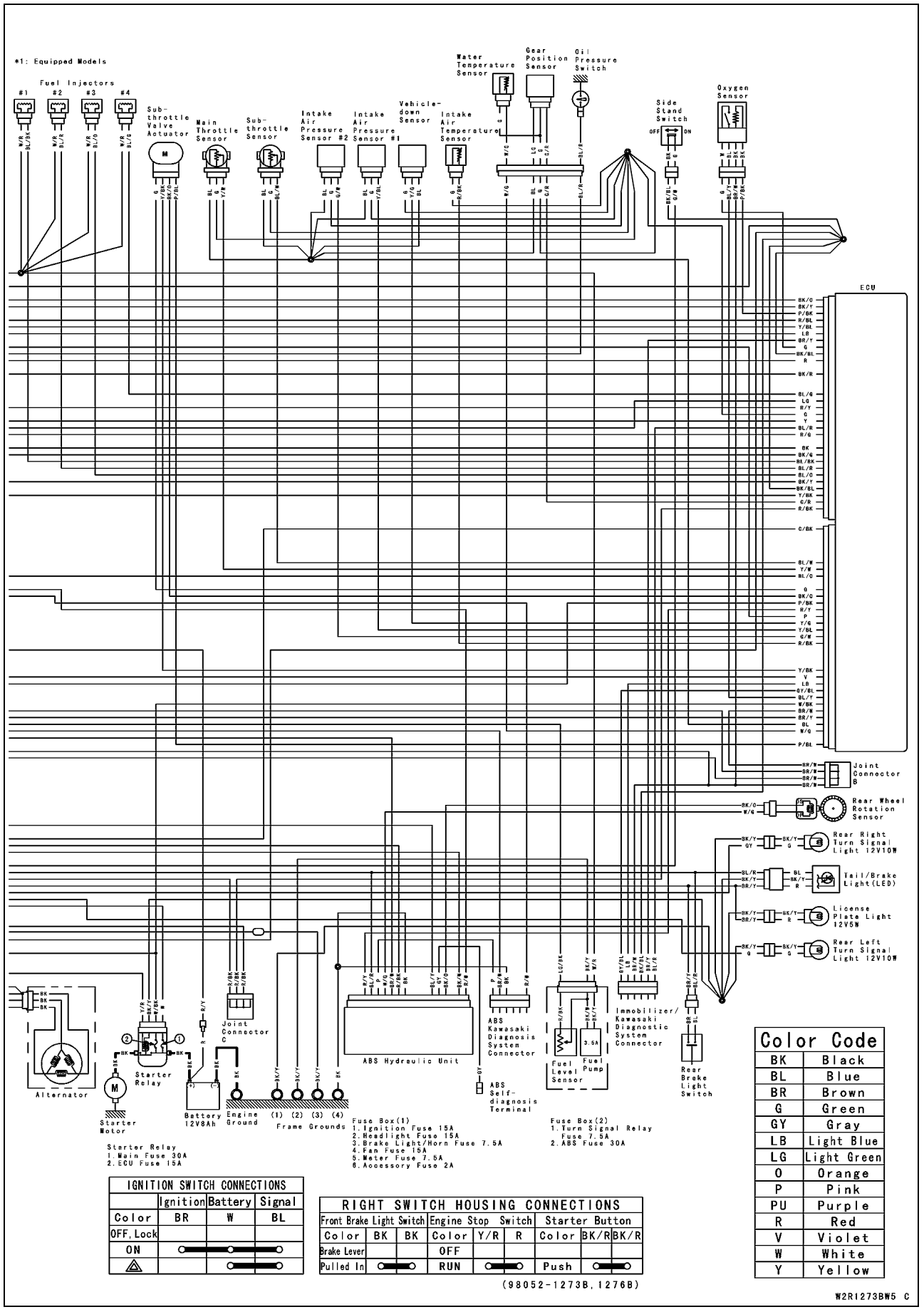

IGNITION SWITCH CONNECTIONS			
	Ignition	Battery	Signal
Color	BR	W	BL
OFF, Lock			
ON	○	○	○
△		○	○

RIGHT SWITCH HOUSING CONNECTIONS								
Front Brake Light Switch			Engine Stop Switch			Starter Button		
Color	BK	BK	Color	Y/R	R	Color	BK/R	BK/R
Brake Lever			OFF					
Pulled In	○	○	RUN	○	○	Push	○	○

(98052-1273B, 1276B)

Color Code	
BK	Black
BL	Blue
BR	Brown
G	Green
GY	Gray
LB	Light Blue
LG	Light Green
O	Orange
P	Pink
PU	Purple
R	Red
V	Violet
W	White
Y	Yellow

W2R1273BW5 C

Precautions

There are a number of important precautions that are musts when servicing electrical systems. Learn and observe all the rules below.

- Do not reverse the battery cable connections. This will burn out the diodes on the electrical parts.
- Always check battery condition before condemning other parts of an electrical system. A fully charged battery is a must for conducting accurate electrical system tests.
- The electrical parts should never be struck sharply, as with a hammer, or allowed to fall on a hard surface. Such a shock to the parts can damage them.
- To prevent damage to electrical parts, do not disconnect the battery cables or any other electrical connections when the ignition switch is on, or while the engine is running.
- Because of the large amount of current, never keep the starter button pushed when the starter motor will not turn over, or the current may burn out the starter motor windings.
- Take care not to short the cables that are directly connected to the battery positive (+) terminal to the chassis ground.
- Troubles may involve one or in some cases all items. Never replace a defective part without determining what CAUSED the failure. If the failure was caused by some other item or items, they must be repaired or replaced, or the new replacement will soon fail again.
- Make sure all connectors in the circuit are clean and tight, and examine wires for signs of burning, fraying, etc. Poor wires and bad connections will affect electrical system operation.
- Measure coil and winding resistance when the part is cold (at room temperature).

Electrical Wiring

Wiring Inspection

- Visually inspect the wiring for signs of burning, fraying, etc.

★If any wiring is poor, replace the damaged wiring.

- Pull each connector [A] apart and inspect it for corrosion, dirt, and damage.

★If the connector is corroded or dirty, clean it carefully. If it is damaged, replace it.

- Check the wiring for continuity.

○Use the wiring diagram to find the ends of the lead which is suspected of being a problem.

○Connect a tester between the ends of the leads.

★If the tester does not read about 0 Ω, the lead is defective. Replace the lead or the wiring harness [B] if necessary.

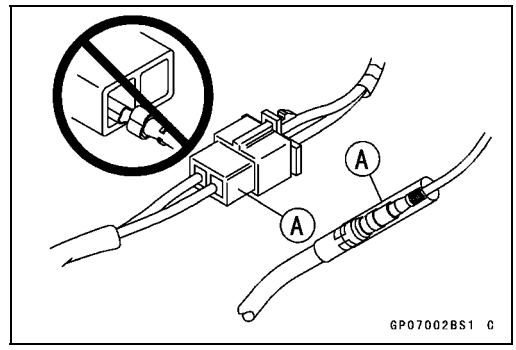

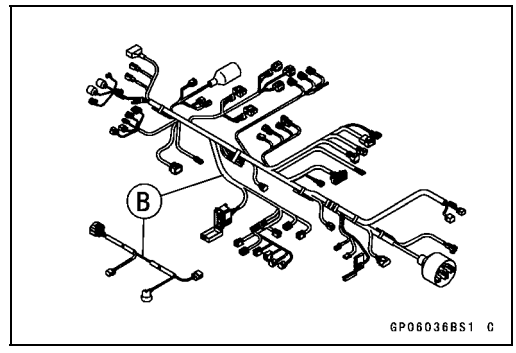

Battery

Battery Removal

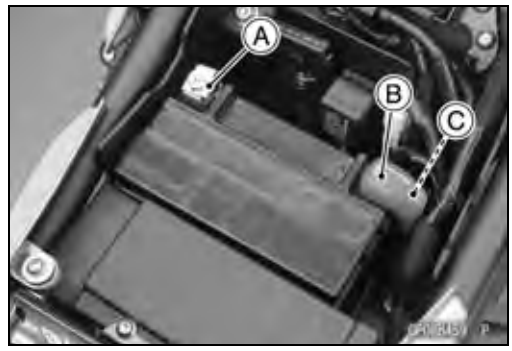

- Turn the ignition switch off.
- Remove:
  Front Seat (see Front Seat Removal in the Frame chapter)
- Disconnect the negative (–) cable [A].

NOTICE
Be sure to disconnect the negative (–) cable first.

- Slide out the positive (+) terminal cap [B] and disconnect the positive (+) cable [C].
- Remove the battery.

Battery Installation

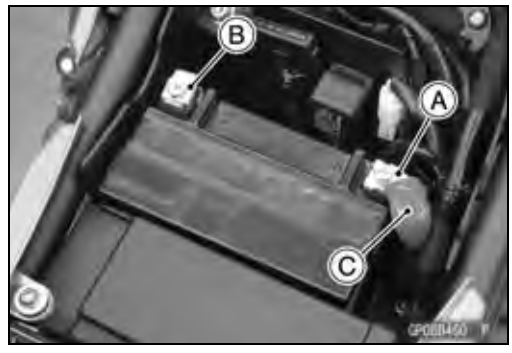

- Turn the ignition switch off.
- Put the battery into the battery case.
- Connect the positive (+) cable [A] first.
- Connect the negative (–) cable [B].
- Apply a light coat of grease on the terminals to prevent corrosion.
- Cover the positive (+) terminal with the cap [C].
- Install the front seat (see Front Seat Installation in the Frame chapter).

Battery Activation

Electrolyte Filling

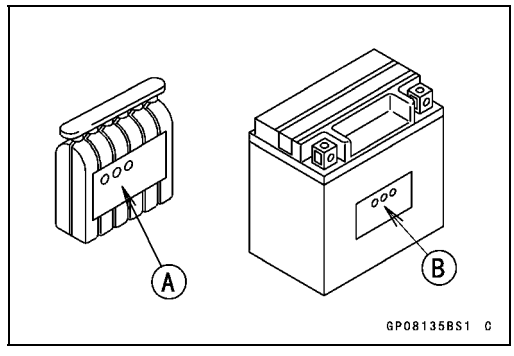

- Make sure that the model name [A] of the electrolyte container matches the model name [B] of the battery. These names must be the same.

Battery Model Name

ZR900A/B: FTX9-BS

NOTICE
Each battery comes with its own specific electrolyte container; using the wrong container may overfill the battery with incorrect electrolyte, which can shorten battery life and deteriorate battery performance. Be sure to use the electrolyte container with the same model name as the battery since the electrolyte volume and specific gravity vary with the battery type.

Battery

NOTICE

Do not remove the aluminum sealing sheet [A] from the filler ports [B] until just prior to use. Be sure to use the dedicated electrolyte container for correct electrolyte volume.

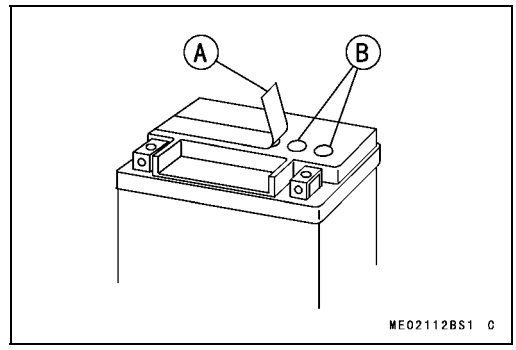

⚠ DANGER

Sulfuric acid in battery electrolyte can cause severe burns. To prevent burns, wear protective clothing and safety glasses when handling electrolyte. If the electrolyte comes in contact with your skin or eyes, wash the area with liberal amounts of water and seek medical attention for more severe burns.

- Place the battery on a level surface.
- Check to see that the sealing sheet has no peeling, tears, or holes in it.
- Remove the sealing sheet.

NOTE

○*The battery is vacuum sealed. If the sealing sheet has leaked air into the battery, it may require a longer initial charge.*

- Remove the electrolyte container from the vinyl bag.
- Detach the strip of caps [A] from the container and set aside, these will be used later to seal the battery.

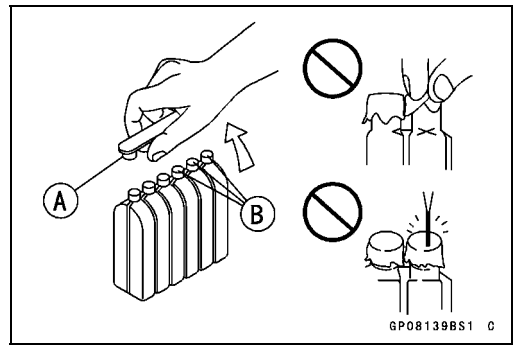

NOTE

○*Do not pierce or otherwise open the sealed cells [B] of the electrolyte container. Do not attempt to separate individual cells.*

- Place the electrolyte container upside down with the six sealed cells into the filler ports of the battery. Hold the container level, push down to break the seals of all six cells. You will see air bubbles rising into each cell as the ports fill.

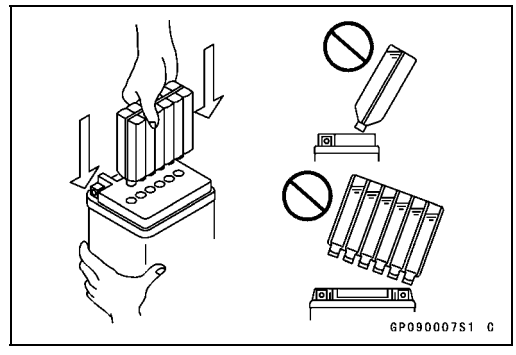

NOTE

○*Do not tilt the electrolyte container.*

Battery

● Check the electrolyte flow.

★If no air bubbles [A] are coming up from the filler ports, or if the container cells have not emptied completely, tap the container [B] a few times.

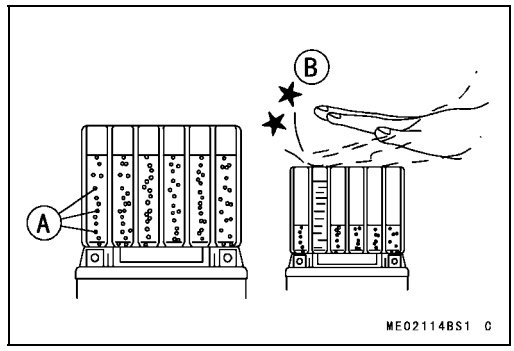

NOTE

○*Be careful not to have the battery fall down.*

● Keep the container in place. Don't remove the container from the battery, the battery requires all the electrolyte from the container for proper operation.

NOTICE

Removal of the container before it is completely empty can shorten the service life of the battery. Do not remove the container until it is completely empty.

● After filling, let the battery sit for 20 ~ 60 minutes with the electrolyte container kept in place, which is required for the electrolyte to fully permeate into the plates.

● Make sure that the container cells have emptied completely, and remove the container from the battery.

● Place the strip of caps [A] loosely over the filler ports, press down firmly with both hands to seat the strip of caps into the battery (don't pound or hammer). When properly installed, the strip of caps will be level with the top of the battery.

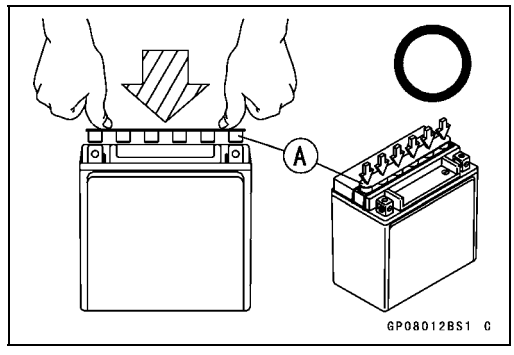

NOTICE

Once the strip of caps is installed onto the battery, never remove the caps, nor add water or electrolyte to the battery.

NOTE

○*Charging the battery immediately after filling can shorten service life.*

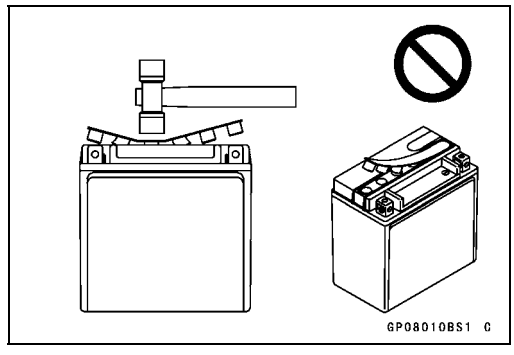

Battery

Initial Charge

● Newly activated sealed batteries require an initial charge.

Standard Charge: 0.9 A × 5 ~ 10 hours

★If using a recommended battery charger, follow the charger's instructions for newly activated sealed battery.

Kawasaki-recommended chargers:
Battery Mate 150-9
OptiMate PRO 4-S/PRO S/PRO2
Yuasa MB-2040/2060
Christie C10122S

★If the above chargers are not available, use equivalent one.

● Let battery sit 30 minutes after initial charge, then check voltage using a voltmeter. (Voltage immediately after charging becomes temporarily high. For accurate measuring, let the battery sit for given time.)

NOTE

○*Charging rates will vary depending on how long the battery has been stored, temperature, and the type of charger used. If voltage is not at least 12.6 V, repeat charging cycle.*

○*To ensure maximum battery life and customer satisfaction, it is recommended the battery be load tested at three times its amp-hour rating for 15 seconds.*
Re-check voltage and if less than 12.6 V repeat the charging cycle and load test. If still below 12.6 V the battery is defective.

Precautions

1) No need of topping-up
No topping-up is necessary in this battery until it ends its life under normal use. Forcibly prying off the seal cap to add water is very dangerous. Never do that.

2) Refreshing charge.
If an engine will not start, a horn sounds weak, or lamps are dim, it indicates the battery has been discharged. Give refresh charge for 5 to 10 hours with charge current shown in the specification (see Refreshing Charge).
When a fast charge is inevitably required, do it following precisely the maximum charge current and time conditions indicated on the battery.

NOTICE

This battery is designed to sustain no unusual deterioration if refresh-charged according to the method specified above. However, the battery's performance may be reduced noticeably if charged under conditions other than given above. Never remove the seal cap during refresh charge.
If by chance an excessive amount of gas is generated due to overcharging, the relief valve releases the gas to keep the battery normal.

3) When you do not use the motorcycle for months.
Give a refresh charge before you store the motorcycle and store it with the negative cable removed. Give a refresh charge **once a month** during storage.

4) Battery life.
If the battery will not start the engine even after several refresh charges, the battery has exceeded its useful life. Replace it (Provided, however, the vehicle's starting system has no problem).

Battery

⚠ DANGER

Batteries produce an explosive gas mixture of hydrogen and oxygen that can cause serious injury and burns if ignited. Keep the battery away from sparks and open flames during charging. When using a battery charger, connect the battery to the charger before turning on the charger. This procedure prevents sparks at the battery terminals which could ignite any battery gases. The electrolyte contains sulfuric acid. Be careful not to have it touch your skin or eyes. If touched, wash it off with liberal amount of water and seek medical attention for more severe burns.

Interchange

A sealed battery can fully display its performance only when combined with a proper vehicle electric system. Therefore, replace a sealed battery only on a motorcycle which was originally equipped with a sealed battery.

Be careful, if a sealed battery is installed on a motorcycle which had an ordinary battery as original equipment, the sealed battery's life will be shortened.

Charging Condition Inspection

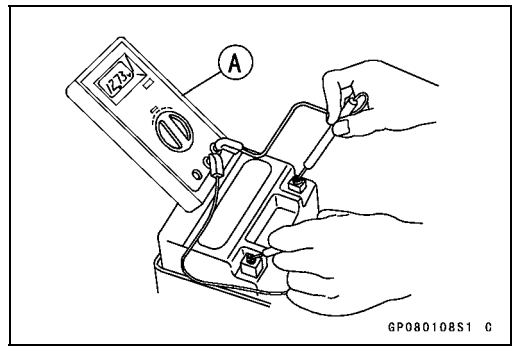

○Battery charging condition can be checked by measuring battery terminal voltage with a digital meter [A].

● Remove:
Battery (see Battery Removal)

● Measure the battery terminal voltage.

NOTE

○*Measure with a digital voltmeter which can be read one decimal place voltage.*

★If the reading is 12.6 V or more, no refresh charge is required, however, if the read is below the specified, refresh charge is required.

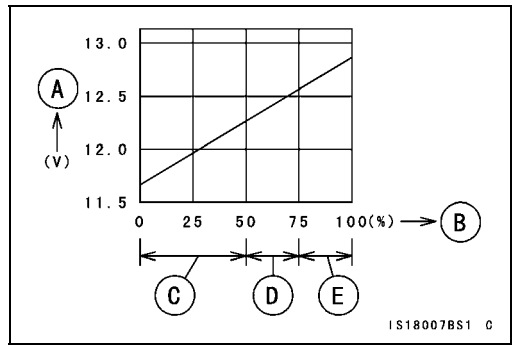

Battery Terminal Voltage
Standard: 12.6 V or more

Terminal Voltage (V) [A]
Battery Charge Rate (%) [B]
Refresh charge is required [C]
Note [D]
Good [E]

Refreshing Charge

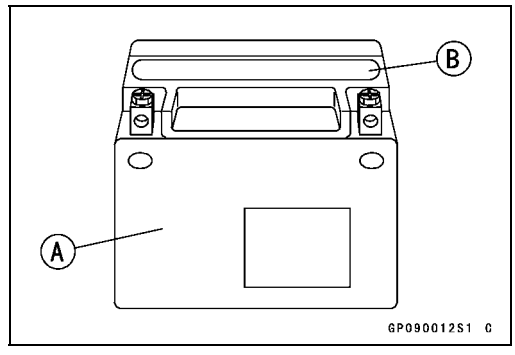

● Remove the battery [A] (see Battery Removal).

● Do refresh charge by following method according to the battery terminal voltage.

⚠ WARNING

This battery is sealed type. Never remove sealing cap [B] even at charging. Never add water. Charge with current and time as stated below.

Battery

Terminal Voltage: 11.5 ~ less than 12.6 V
Standard Charge: 0.9 A × 5 ~ 10 h (see following chart)
Quick Charge: 4 A × 1 h

NOTICE
If possible, do not quick charge. If quick charge is done unavoidably, do standard charge later on.

Terminal Voltage: less than 11.5 V
Charging Method: 0.9 A × 20 h

NOTE

○*Increase the charging voltage to a maximum voltage of 25 V if the battery will not accept current initially. Charge for no more than 5 minutes at the increased voltage then check if the battery is drawing current. If the battery will accept current decrease the voltage and charge by the standard charging method described on the battery case. If the battery will not accept current after 5 minutes, replace the battery.*

Battery [A]
Battery Charger [B]
Standard Value [C]
Current starts to flow [D]

● Determine the battery condition after refresh charge.
○Determine the condition of the battery left for 30 minutes after completion of the charge by measuring the terminal voltage according to the table below.

Criteria	Judgement
12.6 V or higher	Good
12.0 ~ lower than 12.6 V	Charge insufficient → Recharge
lower than 12.0 V	Unserviceable → Replace

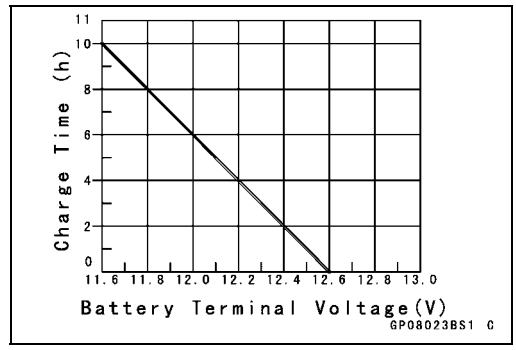

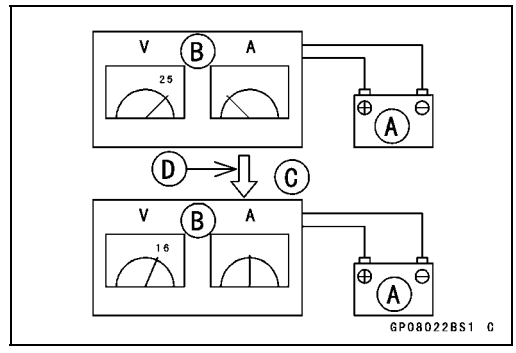

Charging System

Alternator Cover Removal

- Drain:
  Engine Oil (see Engine Oil Change in the Periodic Maintenance chapter)
- Remove:
  Fuel Tank (see Fuel Tank Removal in the Fuel System (DFI) chapter)
  Left Lower Fairing (see Lower Fairing Removal in the Frame chapter)
- Disconnect the alternator lead connector [A].

- Clear the alternator lead from the clamp [A].

- Place a suitable container under the alternator cover [A].
- Remove:
  Alternator Cover Bolts [B]
  Bracket [C]
  Alternator Cover

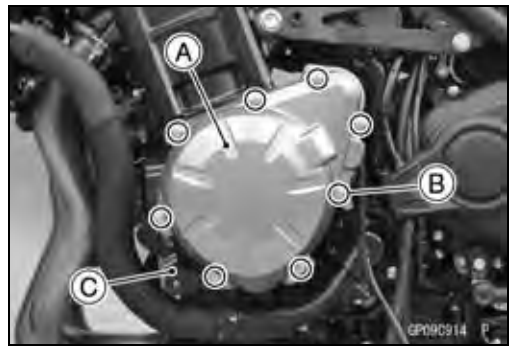

Alternator Cover Installation

- Using a high flash-point solvent, clean off any oil or dirt that may be on the liquid gasket coating area. Dry them with a clean cloth.
- Apply liquid gasket to the alternator lead grommet and crankcase halves mating surface [A] on the front and rear sides of the cover mount.

  Sealant - Liquid Gasket, TB1211F: 92104-0004

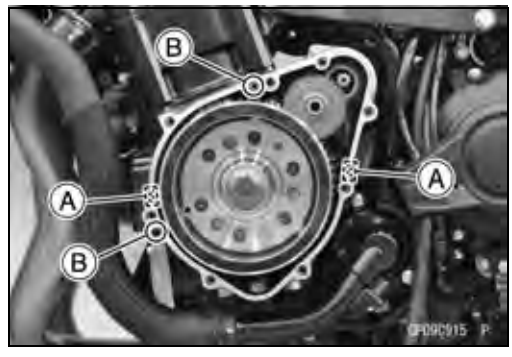

- Check that dowel pins [B] are in place on the crankcase.
- Replace the alternator cover gasket with a new one.
- Tighten:

  Torque - Alternator Cover Bolts: 12 N·m (1.2 kgf·m, 106 in·lb)

- Run the alternator lead correctly (see Cable, Wire, and Hose Routing section in the Appendix chapter).
- Install the removed parts (see appropriate chapters).

Charging System

Stator Coil Removal

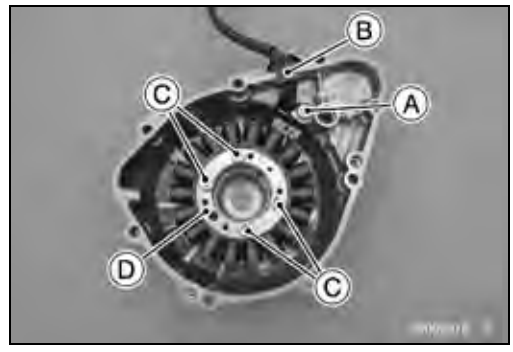

- Remove:
  Alternator Cover (see Alternator Cover Removal)
  Alternator Lead Holding Plate Bolt [A] and Plate
  Alternator Lead Grommet [B]
  Stator Coil Bolts [C]
- Remove the stator coil [D] from the alternator cover.

Stator Coil Installation

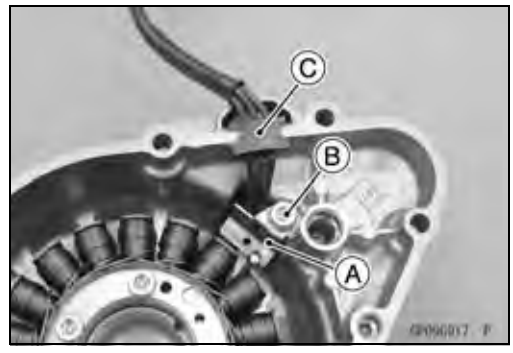

- Apply a non-permanent locking agent to the threads of the stator coil bolts and tighten them.

  Torque - Stator Coil Bolts: 12 N·m (1.2 kgf·m, 106 in·lb)

- Secure the alternator lead with a holding plate [A].
- Apply a non-permanent locking agent to the threads of the plate bolt [B] and tighten it.

  Torque - Alternator Lead Holding Plate Bolt: 12 N·m (1.2 kgf·m, 106 in·lb)

- Using a high flash-point solvent, clean off any oil or dirt that may be on the liquid gasket coating area. Dry them with a clean cloth.
- Apply liquid gasket to the circumference of the alternator lead grommet [C], and fit the grommet into the notch of the cover securely.

  Sealant - Liquid Gasket, TB1211F: 92104-0004

- Install the alternator cover (see Alternator Cover Installation).

Alternator Rotor Removal

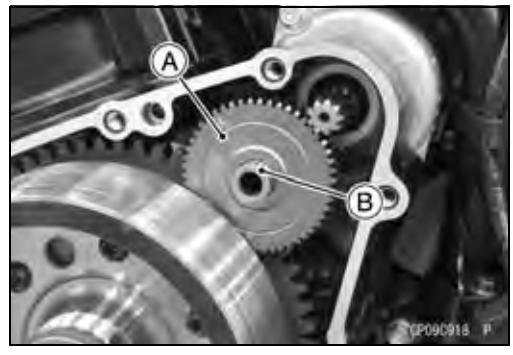

- Remove:
  Alternator Cover (see Alternator Cover Removal)
  Starter Idle Gear [A] and Shaft [B]

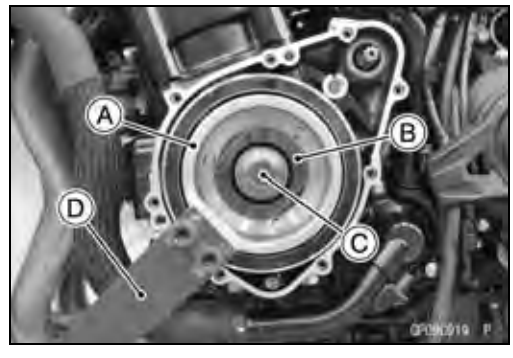

- Hold the alternator rotor steady with the rotor holder [A] and stopper [B].
- Remove the rotor bolt [C] and washer.

  Special Tools - Grip [D]: 57001-1591
  Stopper: 57001-1679
  Rotor Holder: 57001-1690

Charging System

● Using the flywheel puller [A], remove the alternator rotor [B] from the crankshaft.

Special Tool - Flywheel Puller Assembly, M38 × 1.5/M35 × 1.5: 57001-1615

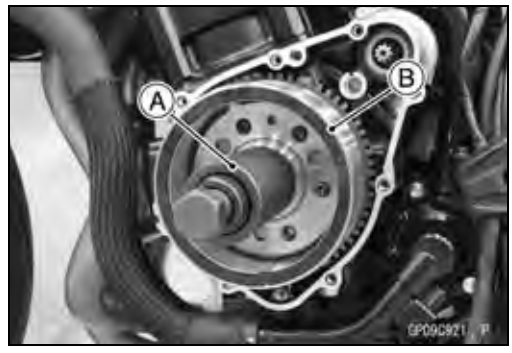

NOTICE
Do not attempt to strike the alternator rotor itself. Striking the rotor can cause the magnets to lose their magnetism.

Alternator Rotor Installation

● Apply a thin coat of molybdenum disulfide grease to the crankshaft [A] and the outer surface [B] of the starter clutch gear [C].

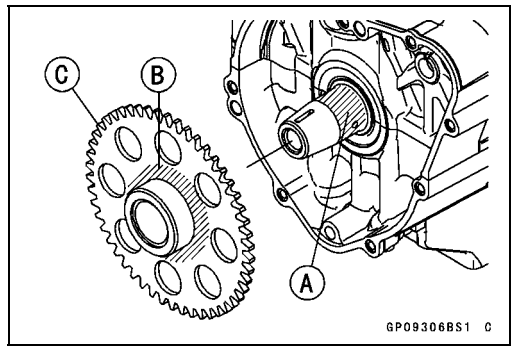

● Install the starter clutch gear [A].
● Using a cleaning fluid, clean off any oil or dirt on the following portions and dry them with a clean cloth.
Crankshaft Tapered Portion [B]
Alternator Rotor Tapered Portion [C]
● Fit the woodruff key [D] securely in the slot in the crankshaft.
○Align the woodruff key with the key way [E] to install the alternator rotor.

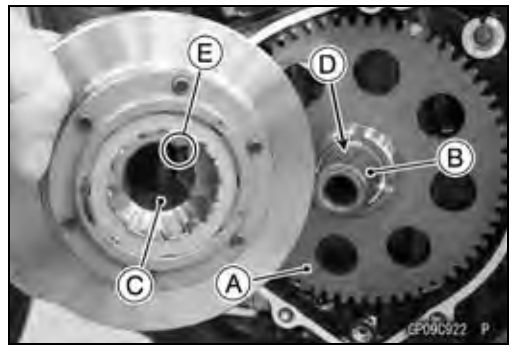

● Install the alternator rotor [A] while turning [B] the starter clutch gear [C] clockwise.

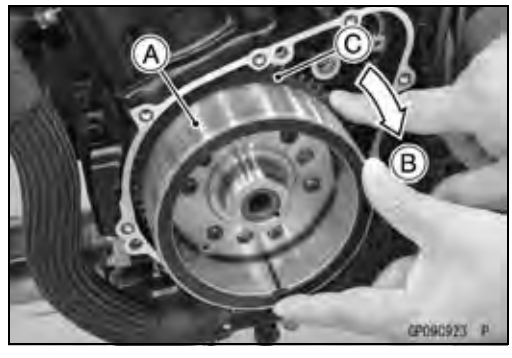

● Using a cleaning fluid, clean off any oil or dirt on the washer [A] and dry it with a clean cloth.
● Install the washer.

NOTE

○*Confirm the alternator rotor fit or not to the crankshaft before tightening it with specified torque.*

● Install the rotor bolt [B] and tighten it with 70 N·m (7.0 kgf·m, 52 ft·lb) of torque.

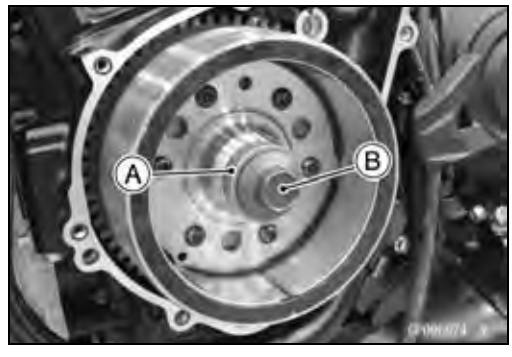

Charging System

- Remove the rotor bolt and washer.
- Check the tightening torque with flywheel puller [A].

Special Tool - Flywheel Puller Assembly, M38 × 1.5/M35 × 1.5: 57001-1615

★If the rotor is not pulled out with 20 N·m (2.0 kgf·m, 15 ft·lb) of drawing torque, it is installed correctly.

★If the rotor is pulled out with under 20 N·m (2.0 kgf·m, 15 ft·lb) of drawing torque, clean off any oil dirt or flaw of the crankshaft and rotor tapered portion, and dry them with a clean cloth. Then, confirm that it is not pulled out with above torque.

- Install the washer and rotor bolt.
- Tighten the alternator rotor bolt [A] while holding the alternator rotor steadily with the holder [B].

Special Tools - Grip [C]: 57001-1591
Stopper [D]: 57001-1679
Rotor Holder: 57001-1690

Torque - Alternator Rotor Bolt: 155 N·m (15.8 kgf·m, 114 ft·lb)

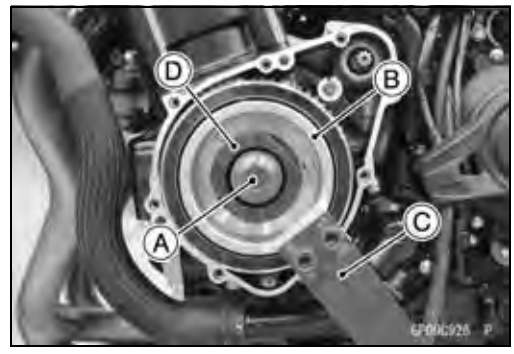

- Using a thickness gauge, make sure the clearance [A] between the starter clutch gear [B] and the starter clutch race [C] is 0.4 mm (0.02 in.) or more.

★If the clearance is less than 0.4 mm (0.02 in.), remove the rotor and starter clutch race, and then clean them thoroughly and reinstall them.

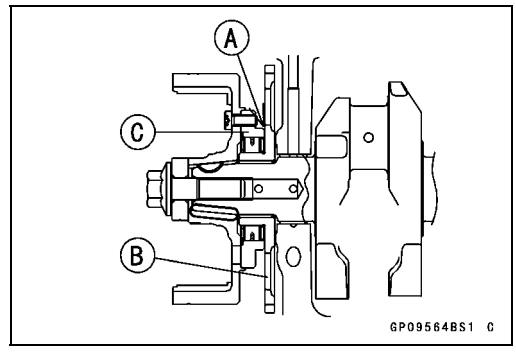

- Apply a thin coat of molybdenum disulfide grease to the shaft [A], and install it with the starter idle gear [B].
- Install the alternator cover (see Alternator Cover Installation).

Charging System

Charging Voltage Inspection

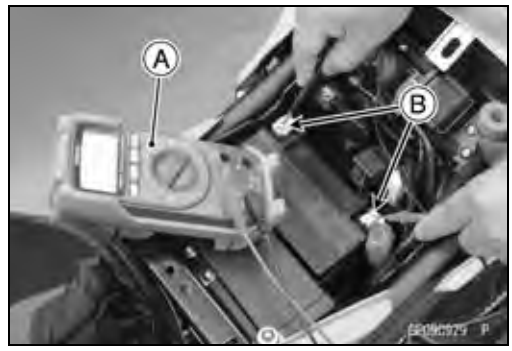

- Check the battery condition (see Charging Condition Inspection).
- Warm up the engine to obtain actual alternator operating conditions.
- Remove the front seat (see Front Seat Removal in the Frame chapter).
- Check that the ignition switch is turned off, and connect a tester [A] to the battery terminals [B].
- Start the engine, and note the voltage readings at various engine speeds (except idling engine speed) with the headlight turned on and then turned off (To turn off the headlight, disconnect the headlight connector on the headlight unit.). The readings should show nearly battery voltage when the engine speed is low, and, as the engine speed rises, the readings should also rise. But they must be kept under the specified voltage.

Charging Voltage **@25°C (77°F)**

Connections		Reading
Tester (+) to	Tester (–) to	
Battery (+)	Battery (–)	DC 14.5 ~ 14.9 V

- Turn off the ignition switch to stop the engine, and disconnect the tester.

★If the charging voltage is kept between the values given in the table, the charging system is considered to be working normally.

★If the charging voltage is much higher than the values specified in the table, the regulator/rectifier is defective or the regulator/rectifier leads are loose or open.

★If the charging voltage does not rise as the engine speed increases, then the regulator/rectifier is defective or the alternator output is insufficient for the loads. Check the alternator and regulator/rectifier to determine which part is defective.

Alternator Inspection

There are three types of alternator failures: short, open (wire burned out), or loss in rotor magnetism. A short or open in one of the coil wires will result in either a low output, or no output at all. A loss in rotor magnetism, which may be caused by dropping or hitting the alternator, by leaving it near an electromagnetic field, or just by aging, will result in low output.

Charging System

● To check the alternator output voltage, do the following procedures.
○Turn the ignition switch off.
○Remove the fuel tank (see Fuel Tank Removal in the Fuel System (DFI) chapter).
○Disconnect the alternator lead connector [A].
○Connect a tester as shown in the table 1.
○Install the fuel tank temporary (see Fuel Tank Installation in the Fuel System (DFI) chapter).
○Start the engine.
○Run it at the rpm given in the table 1.
○Note the voltage readings (total 3 measurements).

Table 1 Alternator Output Voltage @4 000 r/min (rpm)

Connections		Reading
Tester (+) to	Tester (–) to	
One Black lead	Another Black lead	AC 41.6 ~ 62.4 V

★If the output voltage shows the value in the table, the alternator operates properly.
★If the output voltage shows a much lower reading than that given in the table, stop the engine and inspect the stator coil resistance.
● Check the stator coil resistance as follows.
○Stop the engine.
○Connect the tester as shown in the table 2.
○Note the readings (total 3 measurement).

Table 2 Stator Coil Resistance @20°C (68°F)

Connections		Reading
Tester (+) to	Tester (–) to	
One Black lead	Another Black lead	0.176 ~ 0.264 Ω

● When measuring the resistance, use a tester that can measure the standard value.
★If there is more resistance than shown in the table, or no tester reading (infinity) for any two leads, the stator has an open lead and must be replaced. Much less than this resistance means the stator is shorted, and must be replaced.
● Measure the resistance between each of the black leads and chassis ground.
★Any tester reading less than infinity (∞) indicates a short, necessitating stator replacement.
★If the stator coils have normal resistance, but the voltage check showed the alternator to be defective; then the rotor magnets have probably weakened, and the rotor must be replaced.

Charging System

Regulator/Rectifier Removal

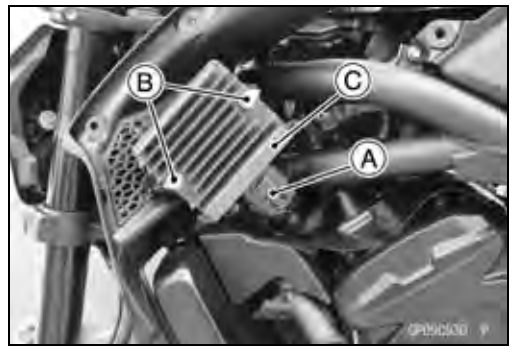

- Remove:
  Left Middle Fairing (see Middle Fairing Removal in the Frame chapter)
- Disconnect the connector [A].
- Remove:
  Regulator/Rectifier Bolts [B]
  Regulator/Rectifier [C]

Regulator/Rectifier Installation

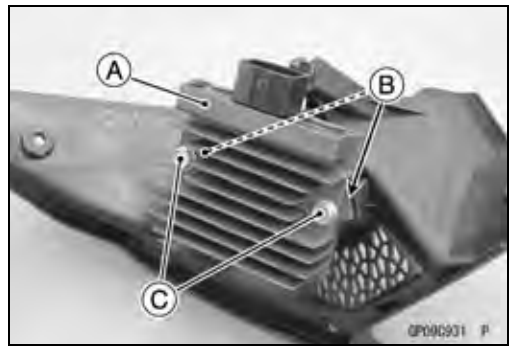

- Install:
  Regulator/Rectifier [A]
  Nut Plates [B]
  Regulator/Rectifier Bolts [C]
- Install the left middle fairing (see Middle Fairing Installation in the Frame chapter).

Regulator/Rectifier Inspection

- Refer to the Charging System Troubleshooting for the Regulator/Rectifier Inspection.

Charging System Troubleshooting

- Before inspection, remove all accessories that consume electrical power.

NOTE

○*Even when the charging system is working properly, the battery may discharge if the motorcycle is equipped with too many accessories.*

- Pay attention to riding conditions and the customer's riding habits which could affect the charging system such as:

  Frequent use at low engine speed
  Frequent and unnecessary brake pedal dragging
  → Battery Discharged

- Recharge the battery if it is discharged.

Charging System

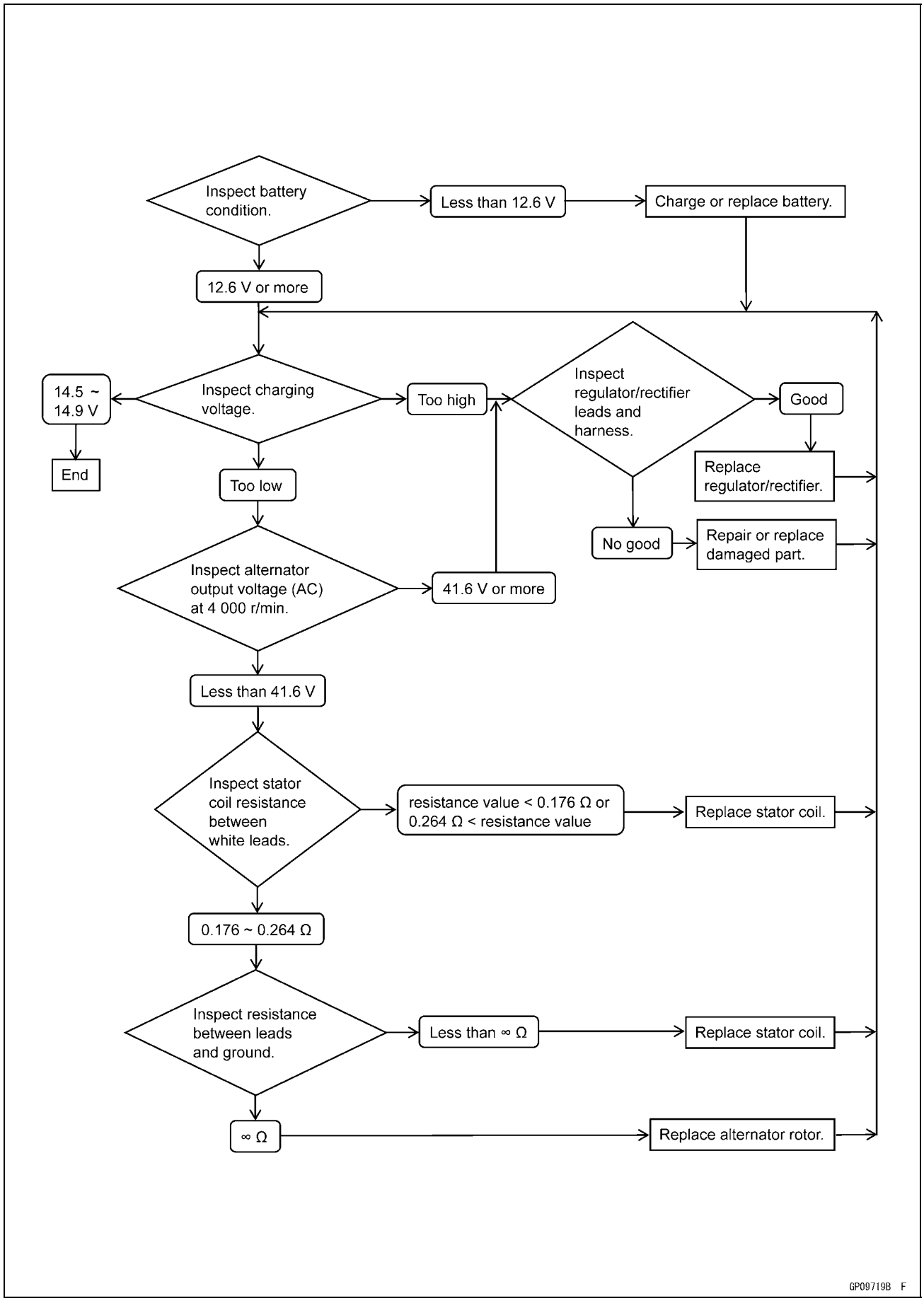

Charging System

Charging System Circuit

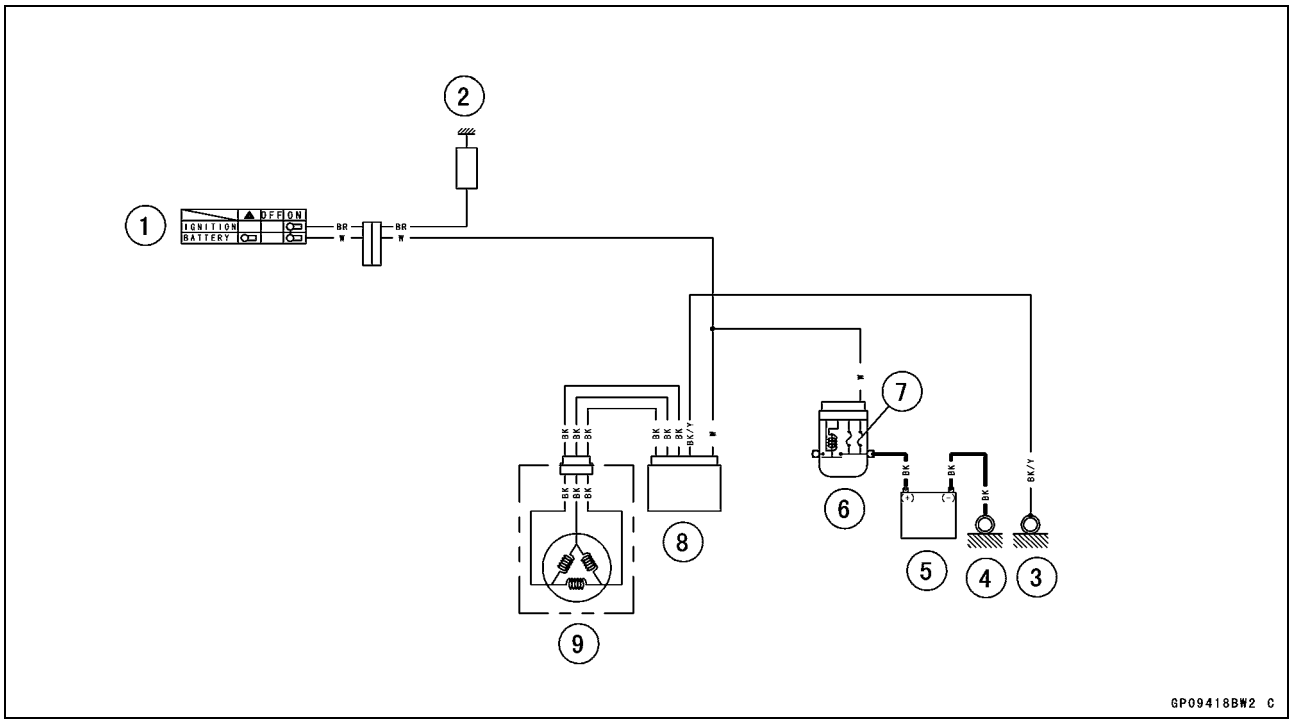

1. Ignition Switch
2. Load
3. Frame Ground (3)
4. Engine Ground
5. Battery 12 V 8 Ah
6. Starter Relay
7. Main Fuse 30 A
8. Regulator/Rectifier
9. Alternator

Ignition System

⚠ WARNING

The ignition system produces extremely high voltage. Do not touch the spark plug, stick coil or stick coil lead while the engine is running, or you could receive a severe electrical shock.

NOTICE

Do not disconnect the battery cables or any other electrical connections when the ignition switch is on, or while the engine is running. This is to prevent ECU damage.
Do not install the battery backwards. The negative side is grounded. This is to prevent damage to the ECU.

Crankshaft Sensor Removal

NOTICE

Never drop the sensor, especially on a hard surface. Such a shock to the sensor can damage it.

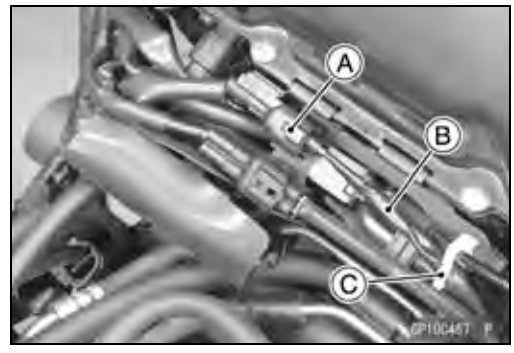

- Drain:
  Engine Oil (see Engine Oil Change in the Periodic Maintenance chapter)
- Remove:
  Fuel Tank (see Fuel Tank Removal in the Fuel System (DFI) chapter)
  Right Lower Fairing (see Lower Fairing Removal in the Frame chapter)
- Disconnect the crankshaft sensor lead connector [A] and free its lead [B] from the clamp [C].
- Clear the crankshaft sensor lead from the clamps [A] at right side of the frame.

- Clear the crankshaft sensor lead from the clamps [A] near the swingarm pivot.

● Clear the crankshaft sensor lead [A] from the clamp [B] under the clutch cover.

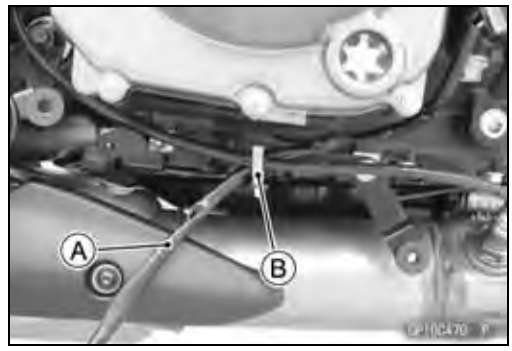

● Remove:
Crankshaft Sensor Cover Bolts [A]
Crankshaft Sensor Cover Bolt [B] (with a Dent on the Bolt Head)
Crankshaft Sensor Cover [C]

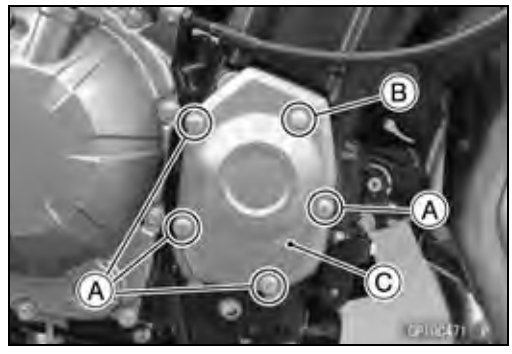

● Remove:
Crankshaft Sensor Bolts [A]
Crankshaft Sensor [B]

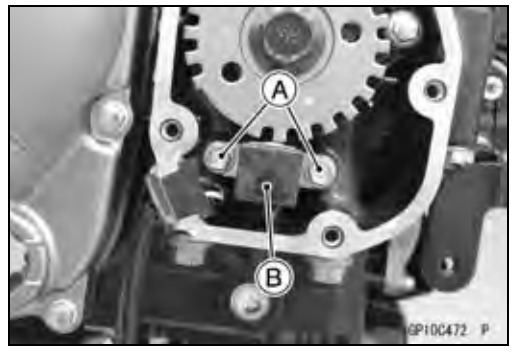

Crankshaft Sensor Installation

● Install the crankshaft sensor.
○When installing the sensor which is fastened by bolts, tighten the bolts after placing the sensor on the bottom surface completely.
● Tighten:

Torque - Crankshaft Sensor Bolts: 6.0 N·m (0.61 kgf·m, 53 in·lb)

Ignition System

- Using a high flash-point solvent, clean off any oil or dirt that may be on the liquid gasket coating area. Dry them with a clean cloth.
- Apply liquid gasket [A] to the crankshaft sensor lead grommet and crankcase halves mating surface on the front and rear sides of the crankshaft sensor cover mount.

  Sealant - Liquid Gasket, TB1211F: 92104-0004

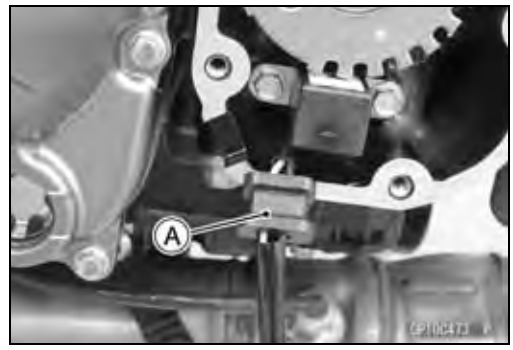

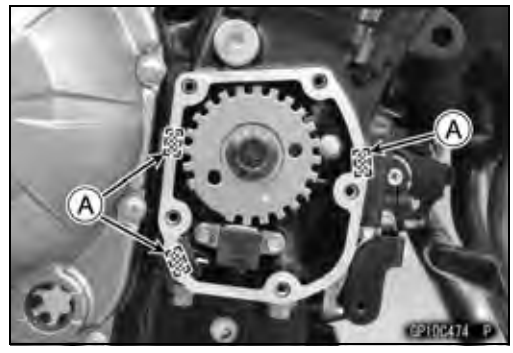

- Replace the O-ring [A] with a new one.

NOTE

○*Do not apply a liquid gasket or a sealant to the groove for O-ring.*

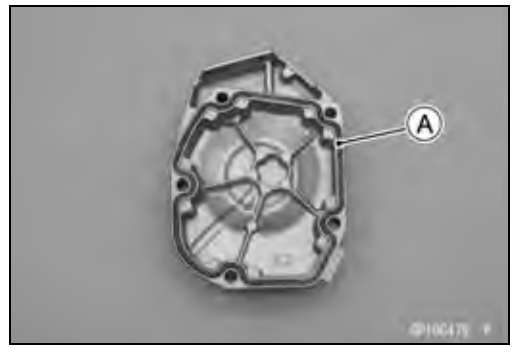

- Install:
  Crankshaft Sensor Cover [A]
- Apply a non-permanent locking agent to the threads of the crankshaft sensor cover bolt [B] which has a dent on the bolt head.
- Tighten the crankshaft sensor cover bolts [B] [C].

  Torque - Crankshaft Sensor Cover Bolts: 12 N·m (1.2 kgf·m, 106 in·lb)

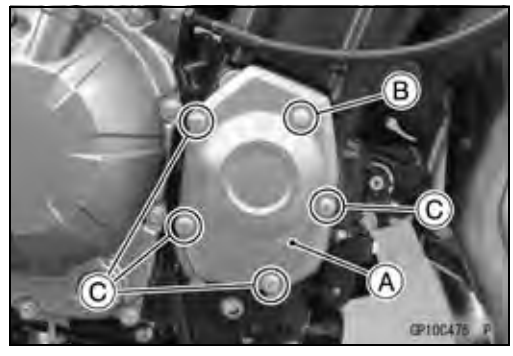

- Run the crankshaft sensor lead and clutch cable correctly (see Cable, Wire, and Hose Routing section in the Appendix chapter).
- Install the removed parts (see appropriate chapters).

Ignition System

Crankshaft Sensor Inspection

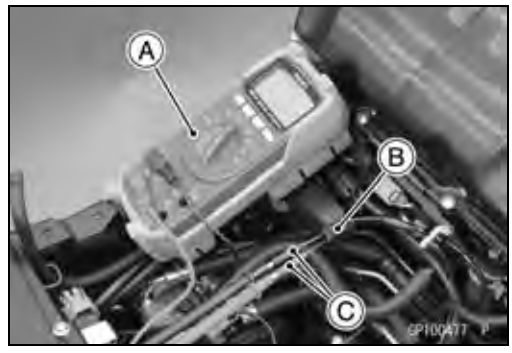

- Disconnect the crankshaft sensor lead connector (see Crankshaft Sensor Removal).
- Set a tester [A], and connect it to the crankshaft sensor lead connector [B].

Special Tool - Needle Adapter Set [C]: 57001-1457

Crankshaft Sensor Resistance
Connections:
Tester (+) → Y lead
Tester (–) → BK lead
Standard: 376 ~ 564 Ω @20°C (68°F)

★If there is more resistance than the specified value, the coil has an open lead and must be replaced. Much less than this resistance means the coil is shorted, and must be replaced.

- Measure the resistance between the crankshaft sensor leads and chassis ground.

★Any tester reading less than infinity (∞) indicates a short, necessitating replacement of the crankshaft sensor.

Crankshaft Sensor Peak Voltage Inspection

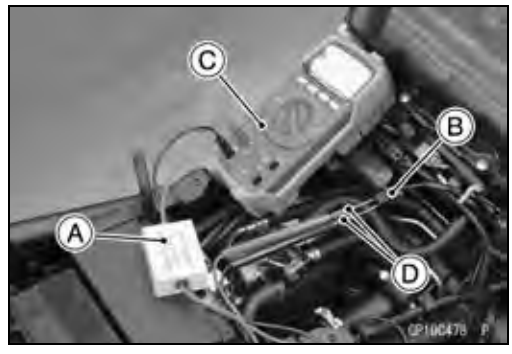

NOTE

○*Be sure the battery is fully charged.*
○*Using the peak voltage adapter [A] is more reliable way to determine the condition of the crankshaft sensor than crankshaft sensor internal resistance measurements.*

- Disconnect the crankshaft sensor lead connector [B] (see Alternator Cover Removal).
- Set a tester [C], and connect it to the peak voltage adapter.

Special Tools - Peak Voltage Adapter: 57001-1415
Type: KEK-54-9-B
Needle Adapter Set [D]: 57001-1457

- Connect the adapter to the terminals of the crankshaft sensor lead connector.

Connections:

Crankshaft Sensor Lead		Peak Voltage Adapter		Tester
Y lead	←	R lead	→	(+)
BK lead	←	BK lead	→	(–)

- Turn the engine stop switch to run position.
- Turn the ignition switch on.
- Pushing the starter button, turn the engine 4 ~ 5 seconds with the transmission gear in neutral to measure the crankshaft sensor peak voltage.
- Repeat the measurement 5 or more times.

Crankshaft Sensor Peak Voltage
Standard: 3.0 V or more

★If the reading is less than the standard, inspect the crankshaft sensor (see Crankshaft Sensor Inspection).

Ignition System

Timing Rotor Removal

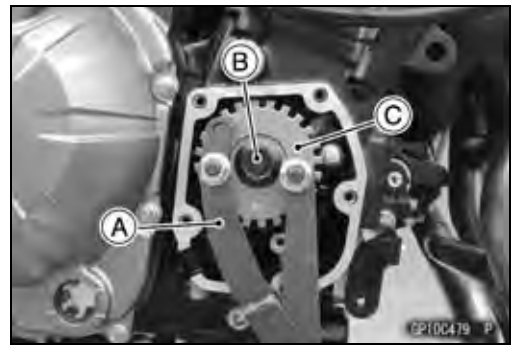

- Remove the crankshaft sensor (see Crankshaft Sensor Removal).
- Holding the timing rotor with the flywheel & pulley holder [A] and remove the timing rotor bolt [B].

  Special Tool - Flywheel & Pulley Holder: 57001-1605

- Remove the timing rotor [C].

Timing Rotor Installation

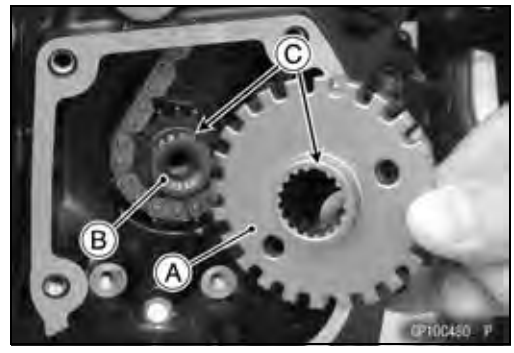

- Install the timing rotor [A] on the crankshaft [B] with their teeth [C] aligned.
- Holding the timing rotor with the flywheel & pulley holder and tighten the timing rotor bolt.

  Torque - Timing Rotor Bolt: 39 N·m (4.0 kgf·m, 29 ft·lb)

  Special Tool - Flywheel & Pulley Holder: 57001-1605

- Install the crankshaft sensor (see Crankshaft Sensor Installation).

Stick Coil Removal

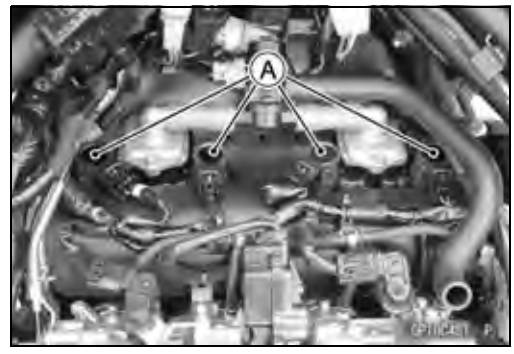

NOTICE
Never drop the stick coils, especially on a hard surface. Such a shock to the stick coils can damage it.

- Remove:
  Air Cleaner Housing (see Air Cleaner Housing Removal in the Fuel System (DFI) chapter)
- Disconnect the connectors from the stick coils [A] and pull out the stick coils.

NOTICE
Do not pry the connector part of the coil while removing the coil.

Stick Coil Installation

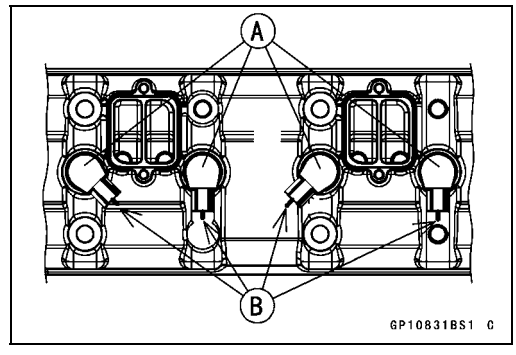

- Insert the stick coils [A] so that the coil heads align with the lines [B] on the cylinder head cover.

NOTICE
Do not tap the coil head while installing the coil.

- After installation, be sure the stick coils are installed securely by pulling up them lightly.
- Run the leads correctly (see Cable, Wire, and Hose Routing section in the Appendix chapter).
- Install the removed parts (see appropriate chapters).

Ignition System

Stick Coil Inspection

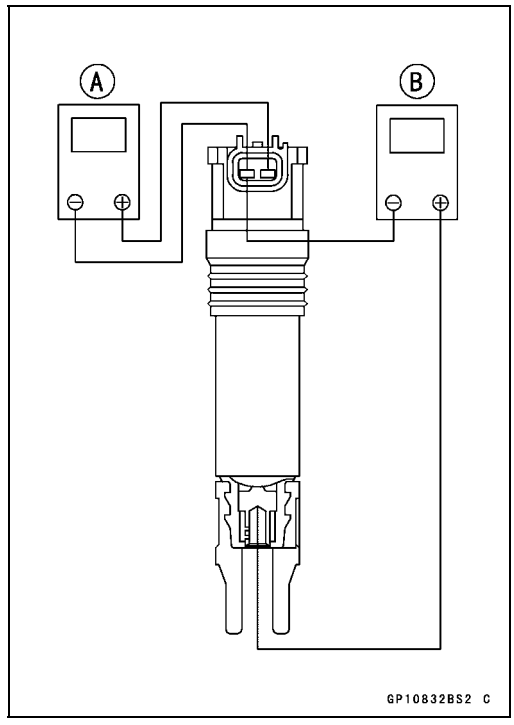

● Remove the stick coils (see Stick Coil Removal).
● Measure the primary winding resistance [A] as follows.
○Connect a tester between the coil terminals.
● Measure the secondary winding resistance [B] as follows.
○Connect the tester between the plug terminal and (–) coil terminal.

Stick Coil Winding Resistance
Primary Windings: 1.11 ~ 1.50 Ω @20°C (68°F)
Secondary Windings: 6.4 ~ 9.6 kΩ @20°C (68°F)

★If the tester does not read as specified, replace the coil.

Stick Coil Primary Peak Voltage Inspection

NOTE

○*Be sure the battery is fully charged.*

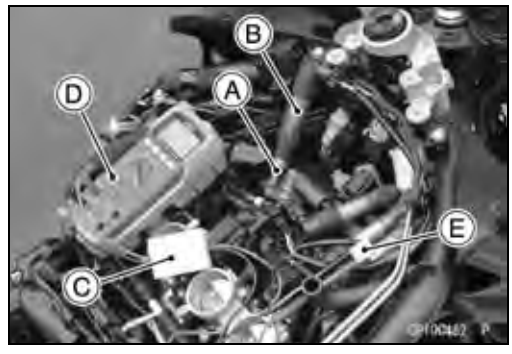

● Remove the stick coils (see Stick Coil Removal), but do not remove the spark plugs.
● Measure the primary peak voltage as follows.
○Install the new spark plug [A] into each stick coil [B], and ground them onto the engine.
○Connect the peak voltage adapter [C] into a tester [D].
○Connect the adapter to the lead wire-peak voltage adapter [E] which is connected between the stick coil connector and stick coil.
ECU [F]
Battery [G]

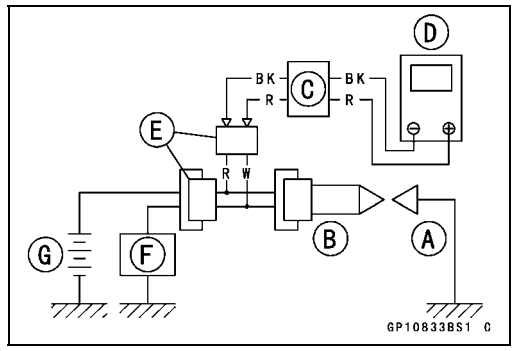

Special Tools - Peak Voltage Adapter: 57001-1415
Type: KEK-54-9-B
Lead Wire - Peak Voltage Adapter: 57001 -1449

Primary Lead Connection
Adapter (R, +) to lead wire-peak voltage adapter (W)
Adapter (BK, –) to lead wire-peak voltage adapter (R)

Ignition System

⚠ WARNING

To avoid extremely high voltage shocks, do not touch the spark plugs or tester connections.

- Turn the engine stop switch to run position.
- Turn the ignition switch on.
- Pushing the starter button, turn the engine 4 ~ 5 seconds with the transmission in neutral to measure the primary peak voltage.
- Repeat the measurements 5 times for one stick coil.

Stick Coil Primary Peak Voltage
Standard: 95 V or more

- Repeat the test for the other stick coil.

★If the reading is less than the specified value, check the following.
Stick Coils (see Stick Coil Inspection)
Crankshaft Sensor (see Crankshaft Sensor Inspection)
ECU (see ECU Power Supply Inspection in the Fuel System (DFI) chapter)

Spark Plug Removal

- Refer to the Spark Plug Replacement in the Periodic Maintenance chapter.

Spark Plug Installation

- Refer to the Spark Plug Replacement in the Periodic Maintenance chapter.

Spark Plug Condition Inspection

- Remove the spark plugs (see Spark Plug Replacement in the Periodic Maintenance chapter).
- Visually inspect the spark plugs.

★If the spark plug center electrode [A] and/or side electrode [B] are corroded or damaged, or if the insulator [C] is cracked, replace the plug.

★If the spark plug is dirtied or the carbon is accumulated, replace the spark plug.

- Measure the gap [D] with a wire-type thickness gauge.

★If the gap is incorrect, replace the spark plug.

Spark Plug Gap: 0.8 ~ 0.9 mm (0.031 ~ 0.035 in.)

- Use the standard spark plug or its equivalent.

Spark Plug: NGK CR9EIA-9

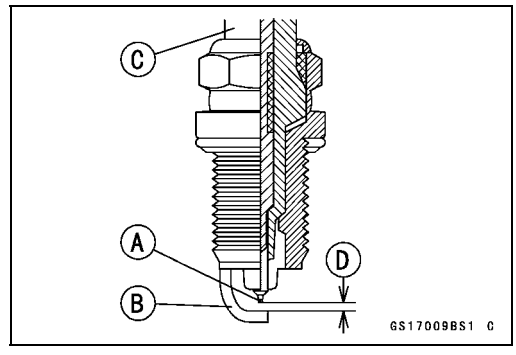

Ignition System

Interlock Operation Inspection

● Raise the rear wheel off the ground with the stand.
● Turn the engine stop switch on (run position).

1st Check

● Start the engine to the following conditions.

Condition:
Transmission Gear → 1st Position
Clutch Lever → Release
Side Stand → Down or Up

○Turn the ignition switch on and push the starter button.
○Then the starter motor should not turn when the starter system circuit is normality.
★If the engine is start, inspect the starter lockout switch, gear position sensor and relay box.

2nd Check

● Start the engine to the following conditions.

Condition:
Transmission Gear → 1st Position
Clutch Lever → Pulled in
Side Stand → Up

○Turn the ignition switch on and push the starter button.
○Then the starter motor should turn when the starter system circuit is normality.
★If the starter motor is not turn, inspect the starter lockout switch, side stand switch, relay box, and starter relay.

3rd Check

● Inspect the engine for its secure stop after the following operations are completed.
● Run the engine to the following conditions.

Condition:
Transmission Gear → 1st Position
Clutch Lever → Release
Side Stand → Up

● Set the side stand on the ground, then the engine will stop.
★If the engine does not stop, inspect the gear position sensor, side stand switch and relay box.
★If their parts are normality, replace the ECU.

IC Igniter Inspection

○The IC igniter is built in the ECU [A].
● Refer to the following items.
Interlock Operation Inspection (see Interlock Operation Inspection)
Ignition System Troubleshooting (see Ignition System section)
ECU Power Supply Inspection (see ECU Power Supply Inspection in the Fuel System (DFI) chapter)

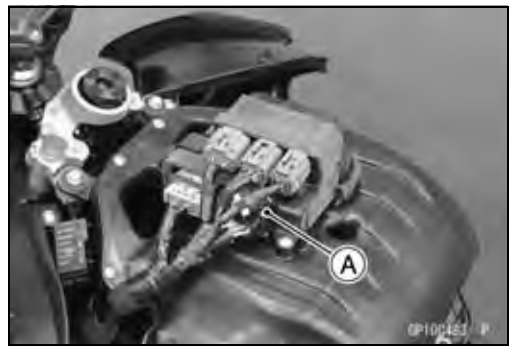

Ignition System

Ignition System Troubleshooting

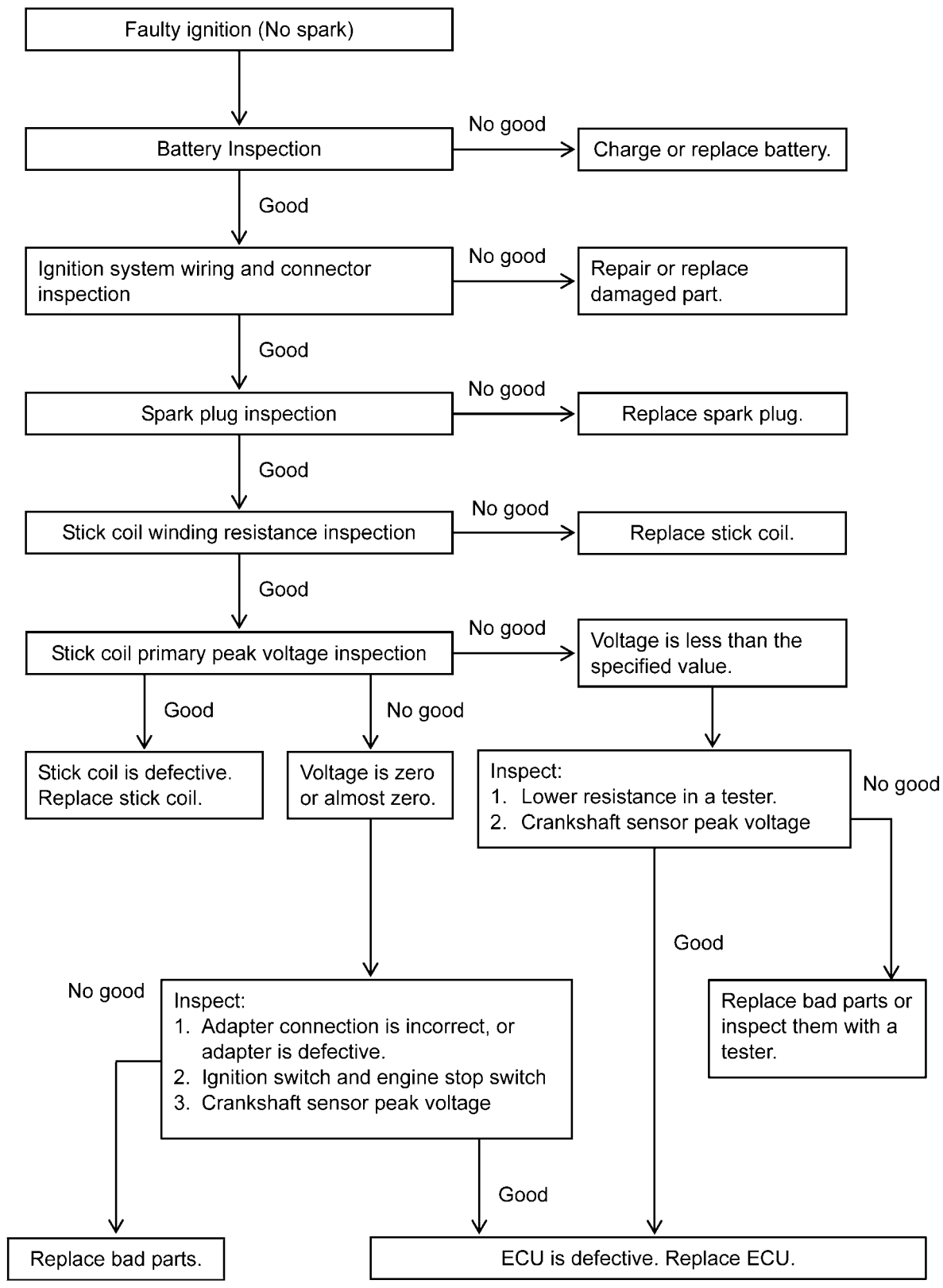

Ignition System

Ignition System Circuit

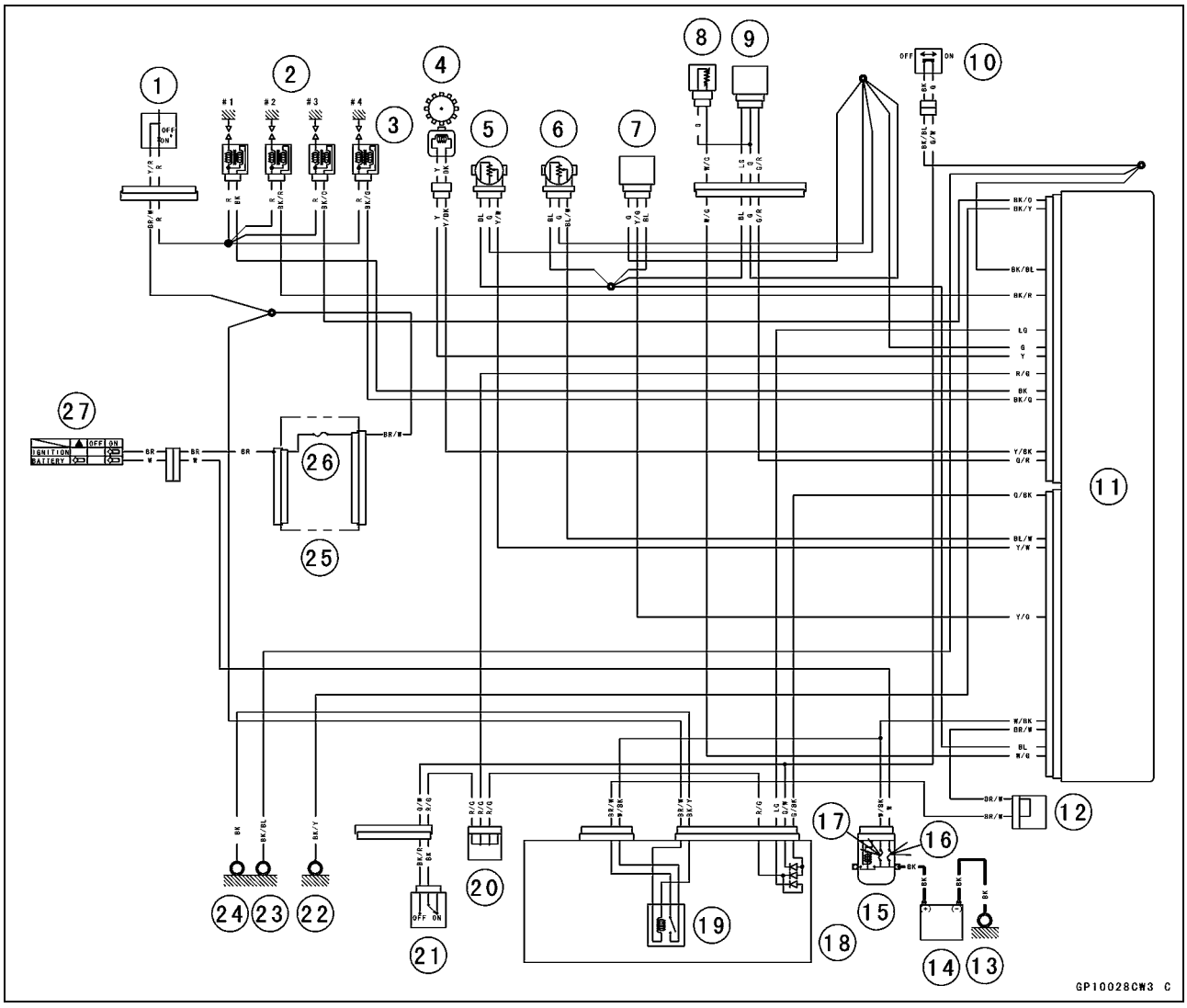

1. Engine Stop Switch
2. Spark Plugs
3. Stick Coils
4. Crankshaft Sensor
5. Main Throttle Sensor
6. Subthrottle Sensor
7. Vehicle-down Sensor
8. Water Temperature Sensor
9. Gear Position Sensor
10. Side Stand Switch
11. ECU
12. Joint Connector B
13. Engine Ground
14. Battery 12 V 8 Ah
15. Starter Relay
16. Main Fuse 30 A
17. ECU Fuse 15 A
18. Relay Box
19. ECU Main Relay
20. Joint Connector A
21. Starter Lockout Switch
22. Frame Ground (9)
23. Frame Ground (7)
24. Frame Ground (6)
25. Fuse Box (1)
26. Ignition Fuse 15 A
27. Ignition Switch

Electric Starter System

Starter Motor Removal

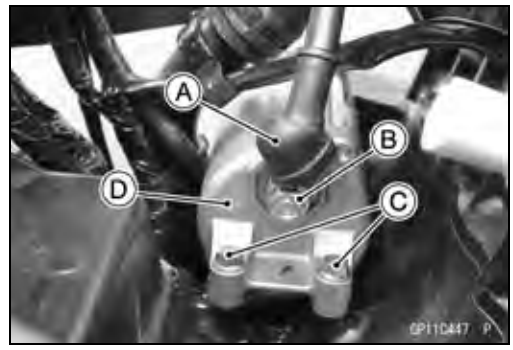

- Remove the coolant reserve tank (see Coolant Reserve Tank Removal in the Cooling System chapter).
- Slide out the rubber cap [A].
- Remove:
  Starter Motor Cable Terminal Nut [B]
  Starter Motor Mounting Bolts [C]
  Starter Motor [D]

Starter Motor Installation

NOTICE
Do not tap the starter motor shaft or body. Tapping the shaft or body could damage the motor.

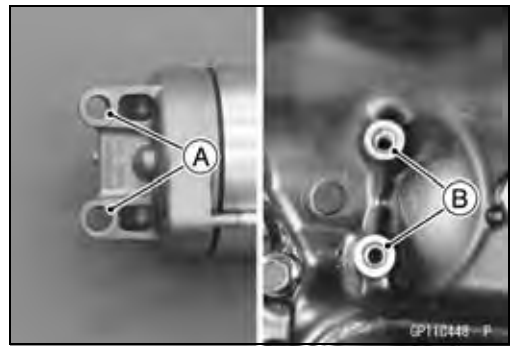

- Clean the starter motor legs [A] and crankcase [B] where the starter motor is ground.

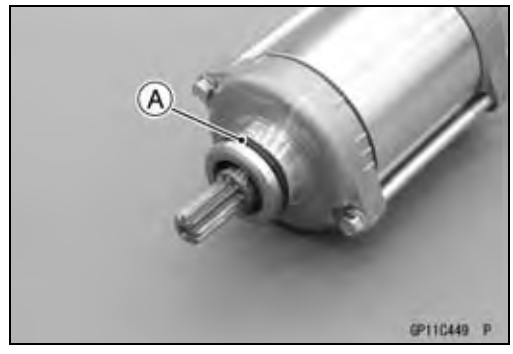

- Replace the O-ring [A] with a new one.
- Apply grease to the O-ring.
- Install the starter motor on the crankcase.

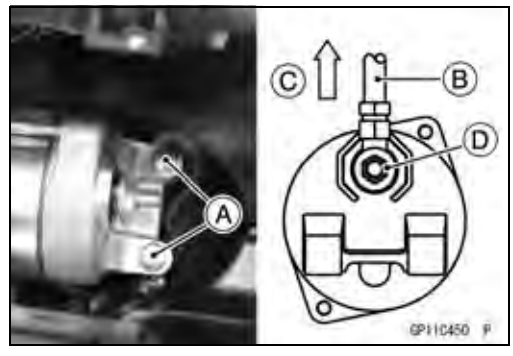

- Tighten the starter motor mounting bolts [A].

  Torque - Starter Motor Mounting Bolts: 9.8 N·m (1.0 kgf·m, 87 in·lb)

- Connect the starter motor cable [B] to the terminal and position it vertically [C] as shown.
- Tighten the starter motor cable terminal nut [D].

  Torque - Starter Motor Cable Terminal Nut: 5.9 N·m (0.60 kgf·m, 52 in·lb)

- Slide back the rubber cap to the original position.
- Install the removed parts (see appropriate chapters).

Starter Motor Disassembly

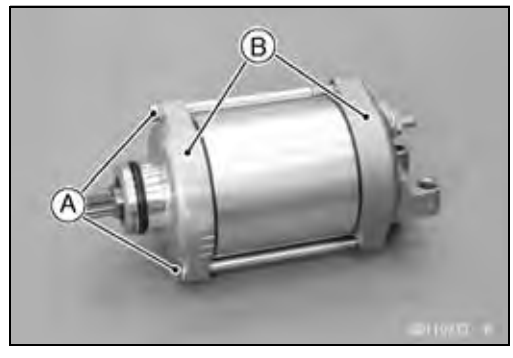

- Remove:
  Starter Motor (see Starter Motor Removal)
  Starter Motor Through Bolts [A]
  End Covers [B]

● Remove the armature [A] from the commutator side.

NOTE

○*Do not remove the circlip [B] from the shaft.*

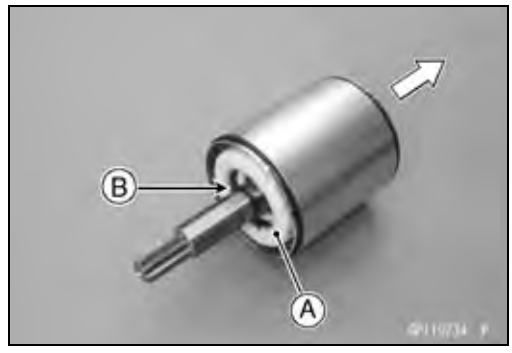

● Remove:
Starter Motor Terminal Locknut [A]
Washer [B]
Collar [C]
O-ring [D]

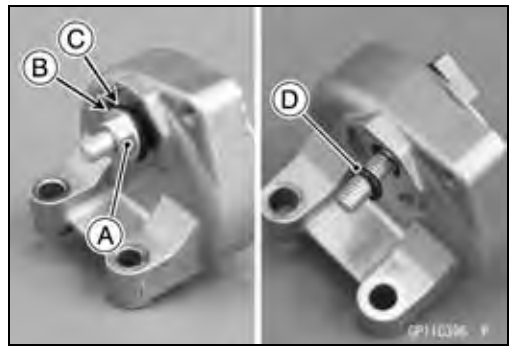

● Pull out the brushes from the brush holder [A].
● Remove:
Brush Springs [B]
Starter Motor Terminal [C]
Positive Brush Assy [D]
Brush Holder Screw [E]
Negative Brush Assy [F]
Brush Holder

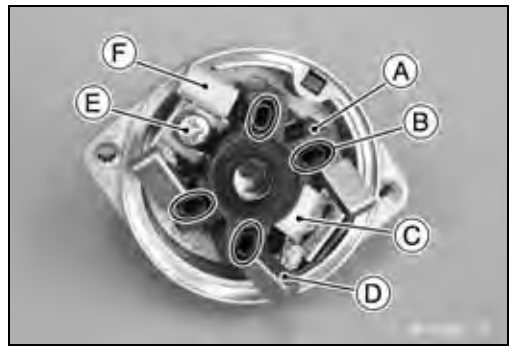

Starter Motor Assembly

● Align the hole [A] of the brush holder [B] to the boss [C] of the right-hand end cover [D].

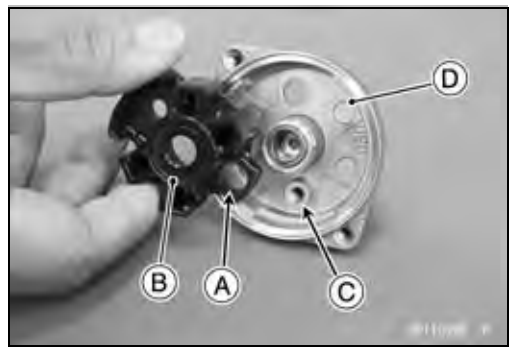

● Align the stoppers [A] of the negative brush assy [B] to the grooves [C] of the brush holder [D].
● Tighten:

Torque - Brush Holder Screw: 3.8 N·m (0.39 kgf·m, 34 in·lb)

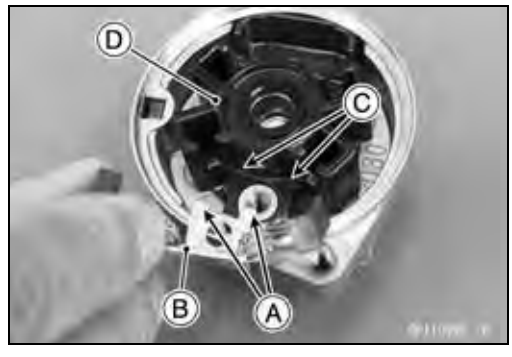

Electric Starter System

● Align the hole [A] of the positive brush assy [B] with the hole [C] of the brush holder [D].
● Insert the starter motor terminal through the holes.

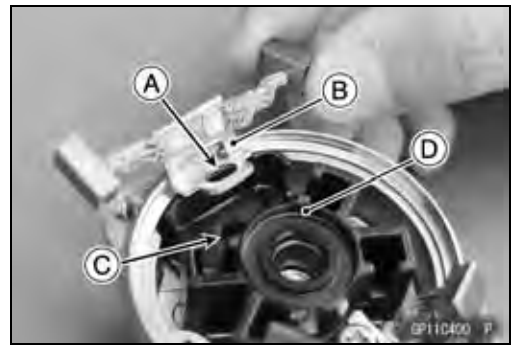

● Replace the O-ring [A] with a new one.
● Install the following parts to the starter motor terminal [B].
New O-ring
Collar [C]
Washer [D]
Starter Motor Terminal Locknut [E]
○Install the collar so that stepped side faces outward.
● Tighten:

Torque - Starter Motor Terminal Locknut: 11 N·m (1.1 kgf·m, 97 in·lb)

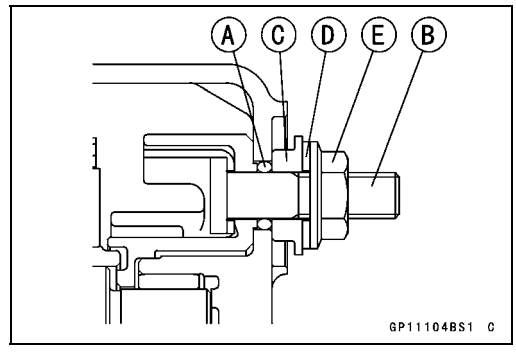

● Install the brush springs [A] and insert the brushes [B].

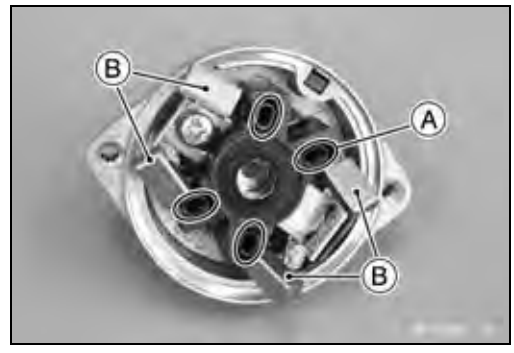

● Apply thin coat of grease to the oil seal [A].

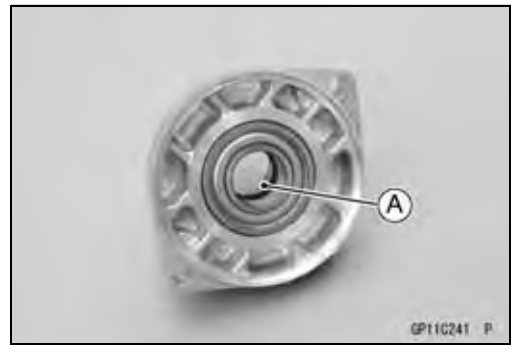

● Replace the O-rings [A] with new ones.
● Insert the armature [B] so that commutator side [C] faces hollow side [D] of the yoke [E].

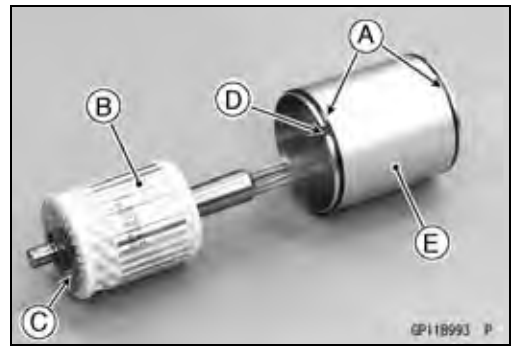

● Install the end cover [A] so that the stopper [B] is aligned with the hollow [C] of the yoke.

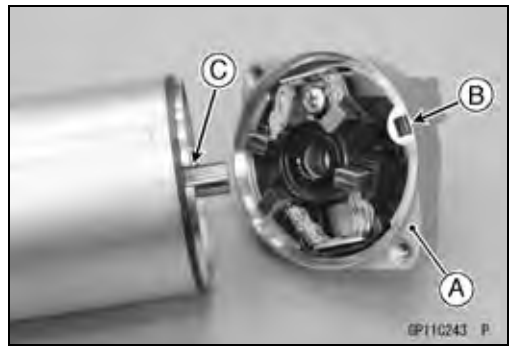

● Align the marks [A] to assembly the yoke and the end covers [B].
● Tighten the through bolts.

Torque - Starter Motor Through Bolts: 5.0 N·m (0.51 kgf·m, 44 in·lb)

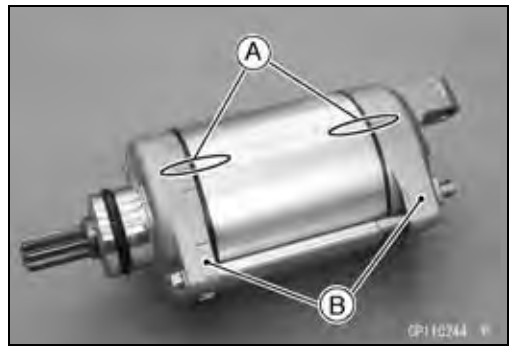

Brush Inspection

● Measure the length of each brush [A].
★If any is worn down to the service limit, replace the brush assy.

Starter Motor Brush Length
Standard: 12 mm (0.47 in.)
Service Limit: 6.5 mm (0.26 in.)

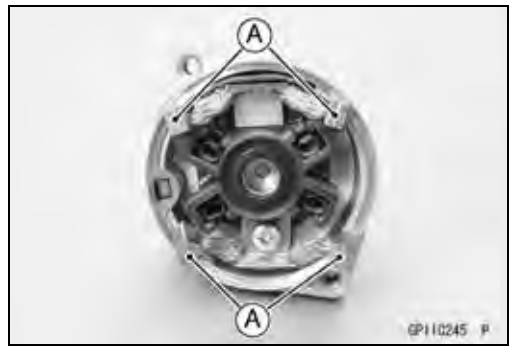

Commutator Cleaning and Inspection

● Clean the metallic debris off the between commutator segments [A].

NOTE

○*Do not use emery or sand paper on the commutator.*

● Check the commutator for damage or abnormal wear.
★Replace the starter motor with a new one if there is any damage or wear.
● Visually inspect the commutator segments for discoloration.
★Replace the starter motor with a new one if discoloration is noticed.

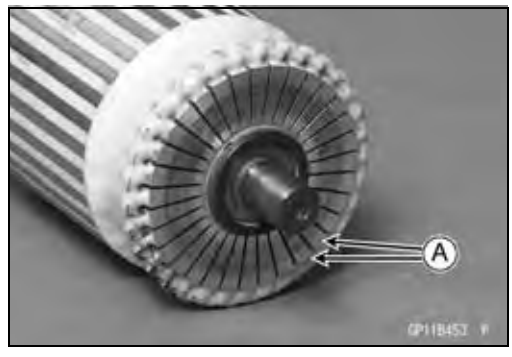

Electric Starter System

Armature Inspection

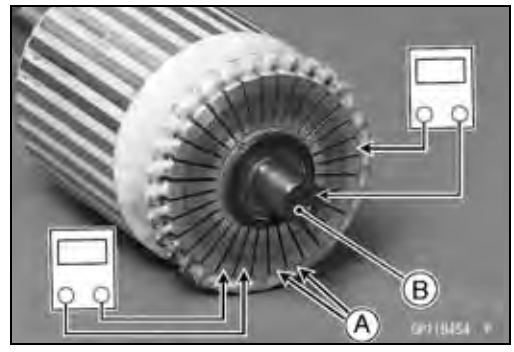

- Using a tester, measure the resistance between any two commutator segments [A].

★If there is a high resistance or no reading (∞) between any two segments, a winding is open and the starter motor must be replaced.

- Using the tester, measure the resistance between the segments and the shaft [B].

★If there is any reading at all, the armature has a short and the starter motor must be replaced.

NOTE

○*Even if the foregoing checks show the armature to be good, it may be defective in some manner not readily detectable with the tester. If all other starter motor and starter motor circuit components check good, but the starter motor still does not turn over or only turns over weakly, replace the starter motor with a new one.*

Brush Lead Inspection

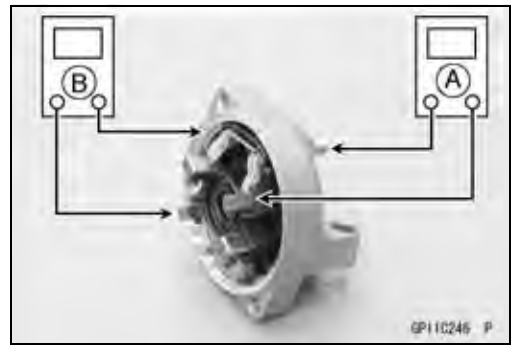

- Using a tester, measure the resistance as shown.
  Terminal Bolt and Positive Brushes [A]
  Right-hand End Cover and Negative Brushes [B]

★If there is not close to zero ohms, the brush lead has an open. Replace the brush plate assy.

Right-hand End Cover Inspection

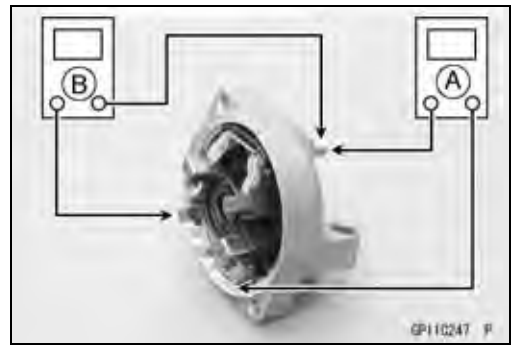

- Using a tester, measure the resistance as shown.
  Terminal Bolt and Right-hand End Cover [A]
  Terminal Bolt and Negative Brushes [B]

★If there is any reading, the brush assy and/or terminal bolt assy have a short. Replace the starter motor.

Starter Relay Inspection

- Remove:
  Front Seat (see Front Seat Removal in the Frame chapter)
  Battery Negative (–) Cable (see Battery Removal)
  Starter Relay Cover [A]

Electric Starter System

● Disconnect:
Connector [A]
● Remove:
Cable Terminal Bolts [B]
Starter Relay [C]

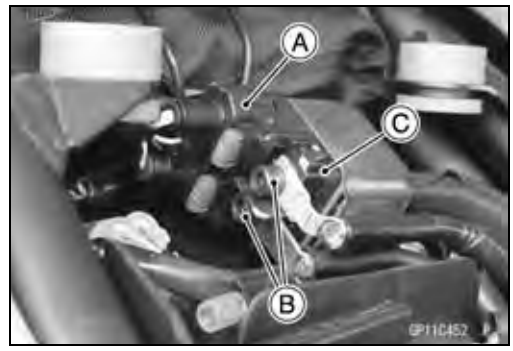

● Connect a tester [A] and 12 V battery [B] to the starter relay [C] as shown.
★If the relay does not work as specified, the relay is defective. Replace the relay.

Testing Relay
Criteria: When battery is connected → 0 Ω
When battery is disconnected → ∞ Ω

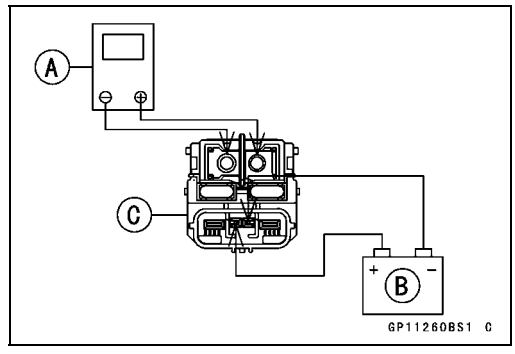

● Installation is reverse of removal.

Torque - Starter Relay Terminal Bolts: 3.9 N·m (0.40 kgf·m, 35 in·lb)

Electric Starter System

Electric Starter Circuit

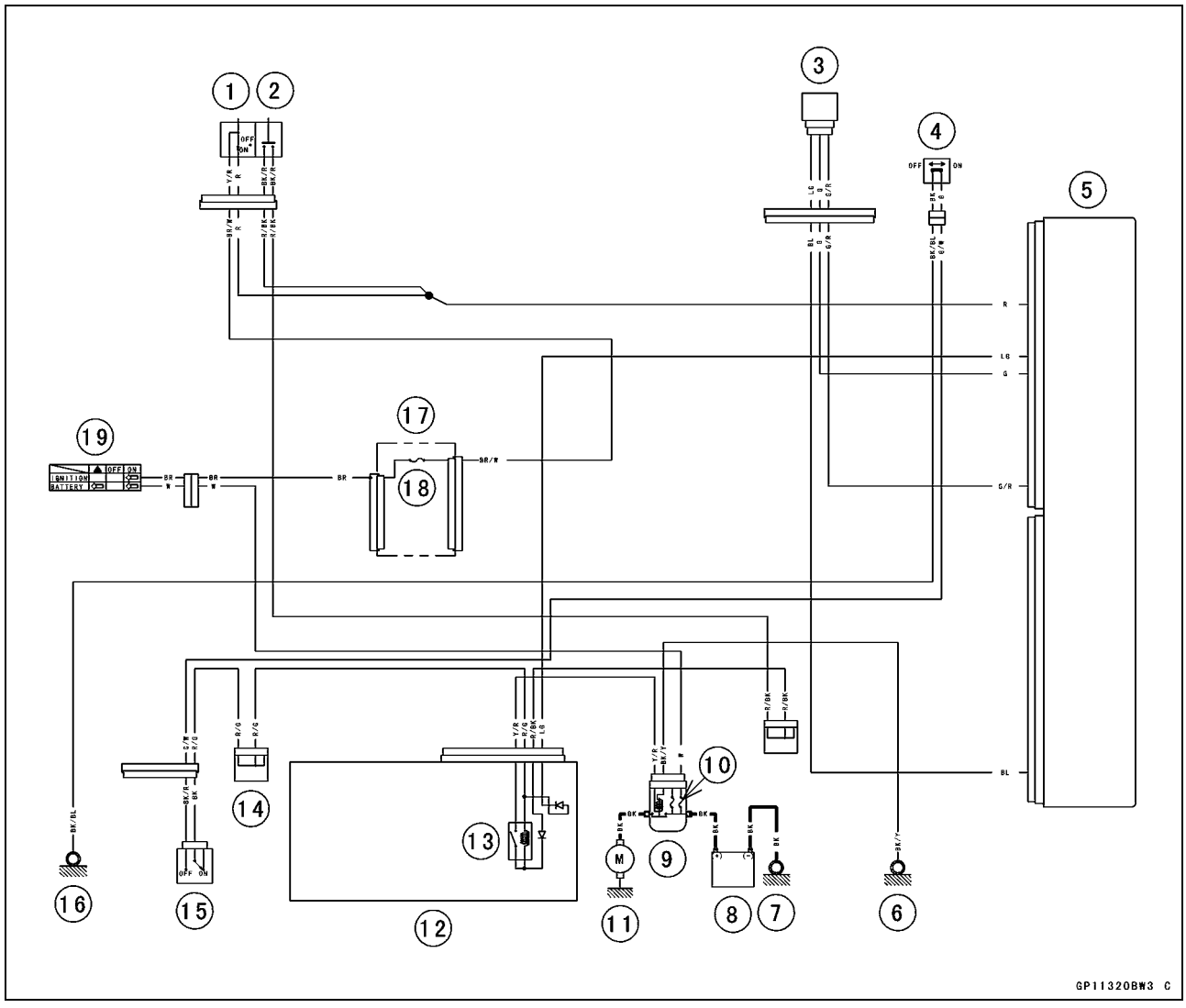

1. Engine Stop Switch
2. Starter Button
3. Gear Position Sensor
4. Side Stand Switch
5. ECU
6. Frame Ground (1)
7. Engine Ground
8. Battery 12 V 8 Ah
9. Starter Relay
10. Main Fuse 30 A
11. Starter Motor
12. Relay Box
13. Starter Circuit Relay
14. Joint Connector A
15. Starter Lockout Switch
16. Frame Ground (7)
17. Fuse Box (1)
18. Ignition Fuse 15 A
19. Ignition Switch

Lighting System

This motorcycle adopt the daylight system and have a headlight relay in the relay box. The headlight does not go on when the ignition switch and the engine stop switch are first turned on. The headlight comes on after the starter button is released and stays on until the ignition switch is turned off. The headlight will go out momentarily whenever the starter button is pressed and come back on when the button is released.

Headlight Beam Horizontal Adjustment

- Refer to the Headlight Aiming Inspection in the Periodic Maintenance chapter.

Headlight Beam Vertical Adjustment

- Refer to the Headlight Aiming Inspection in the Periodic Maintenance chapter.

Headlight Bulb Replacement

- Remove:
  Headlight Unit (see Headlight Unit Removal)
  Dust Cover [A]

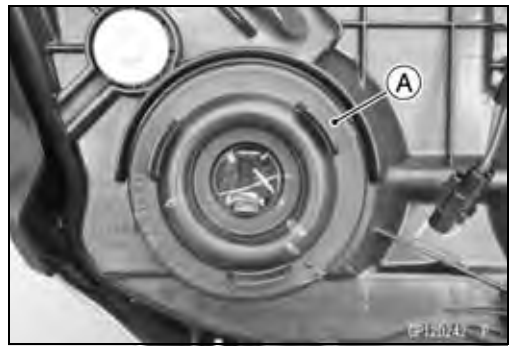

- Clear the hook [A] from the stopper [B].
- Remove:
  Headlight Bulb [C]

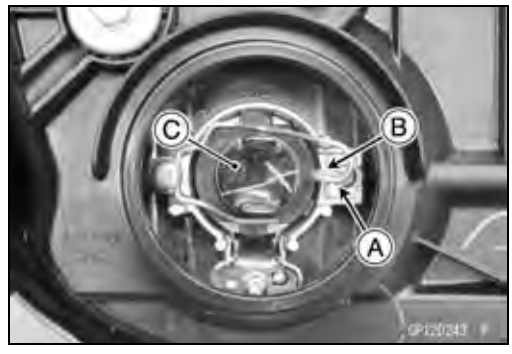

NOTICE

When handling the quartz-halogen bulb, never touch the glass portion with bare hands. Always use a clean cloth. Oil contamination from hands or dirty rags can reduce bulb life or cause the bulb to explode. Use the correct type of headlight bulb with specified voltage and wattage only.

NOTE

○*Clean off any contamination that inadvertently gets on the bulb with alcohol or soap and water solution.*

- Replace the headlight bulb.
- Fit the projection [A] on the bulb in the cutout [B] on the headlight.

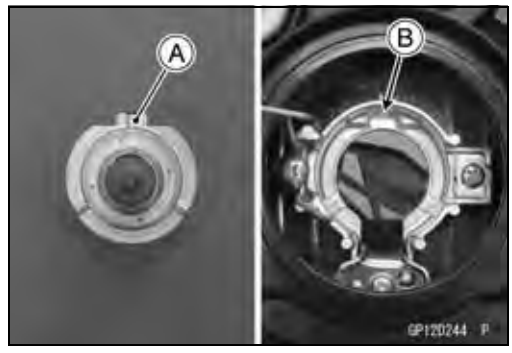

Lighting System

● Install the hook [A] to the stopper [B].

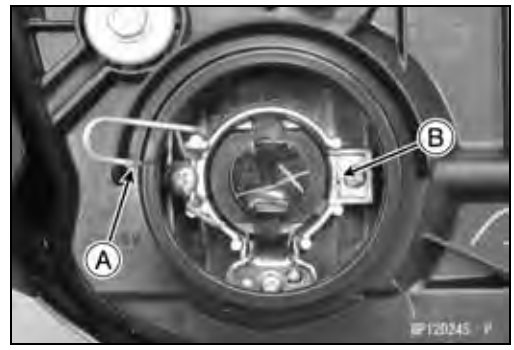

● Fit the dust cover [A] onto the bulb [B] firmly as shown.
Good [C]
Bad [D]
● Install the headlight unit (see Headlight Unit Installation).
● After installation, adjust the headlight aim (see Headlight Aiming Inspection in the Periodic Maintenance chapter).

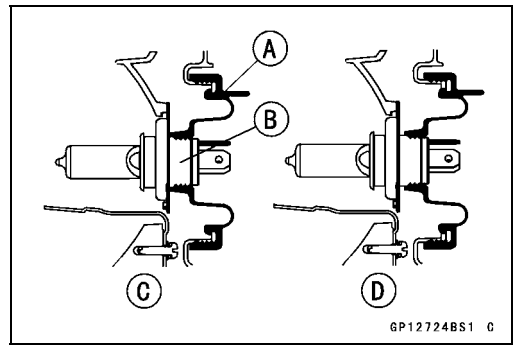

Headlight Unit Removal

● Refer to the Upper Fairing Disassembly/Assembly in the Frame chapter.

Headlight Unit Installation

● Refer to the Upper Fairing Disassembly/Assembly in the Frame chapter.

City Light Bulb Replacement

● Remove the headlight unit (see Headlight Unit Removal).
● Pull out the socket [A] from the headlight housing.

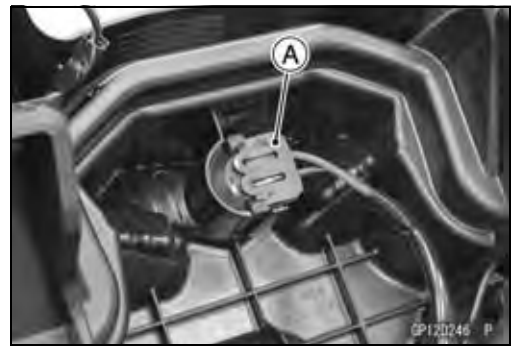

● Pull the bulb [A] out from the socket [B].

NOTICE
Do not turn the bulb. Pull the bulb out to prevent damage to the bulb. Do not use bulb rated for greater wattage than the specified valve.

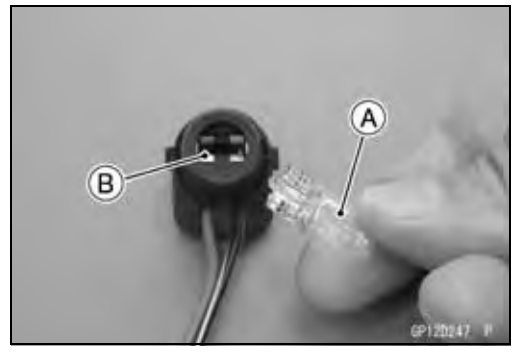

● Replace the bulb with a new one.
● Insert the socket into the headlight unit.

Lighting System

Tail/Brake Light (LED) Unit Removal

- Remove:
  Seat Cover (see Seat Cover Removal in the Frame chapter)
- Disconnect the tail/brake light lead connector [A].

- Remove:
  Battery Case Bolts (Rear) [A]

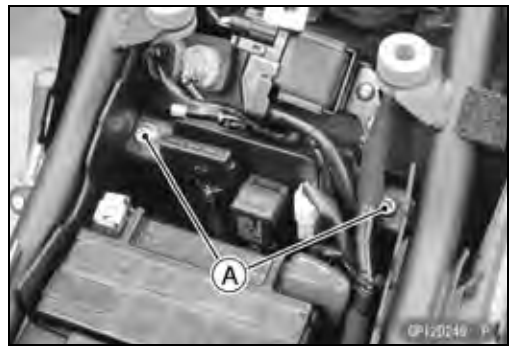

- Remove:
  Flap Bolts [A]
  Tail/Brake Light Bolts [B] and Washers
  Clamp [C]

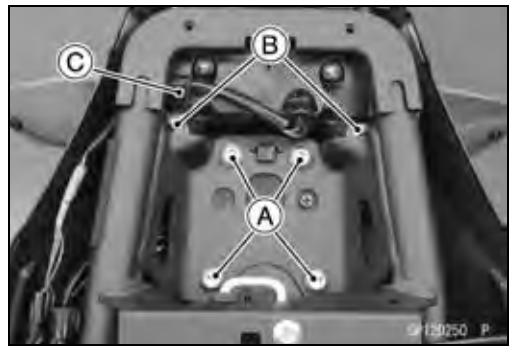

- Unlatch the lock tab [A] of the rear fender and pull the rear fender [B] downward.
- Slide the tail/brake light (LED) unit [C] forward to pull off the bracket [D] from the slot [E] on the rear fender.
- Remove the tail/brake light (LED) unit from the rear fender.

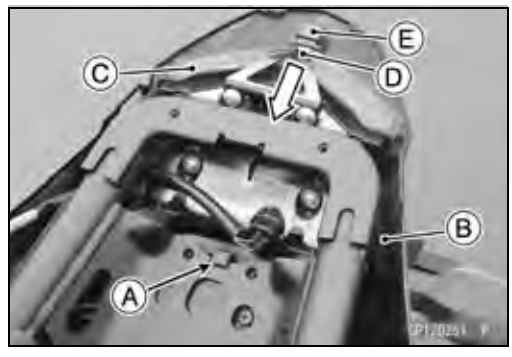

Tail/Brake Light (LED) Unit Installation

- Install the grommets [A] to the tail/brake light (LED) unit [B] with its larger diameter side [C] facing upward [D].
- Install the collars [E] from underside.
- Install the rubber damper [F] to the bracket.

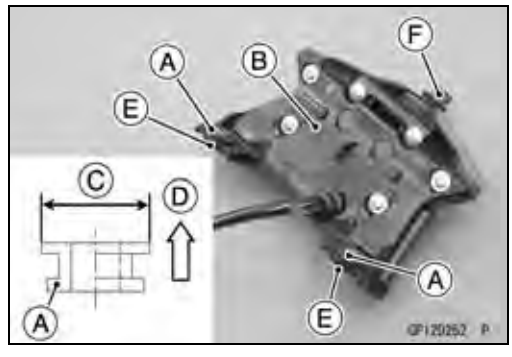

Lighting System

- Insert the rubber damper [A] into the slot [B] to place the tail/brake light (LED) unit on the rear fender.

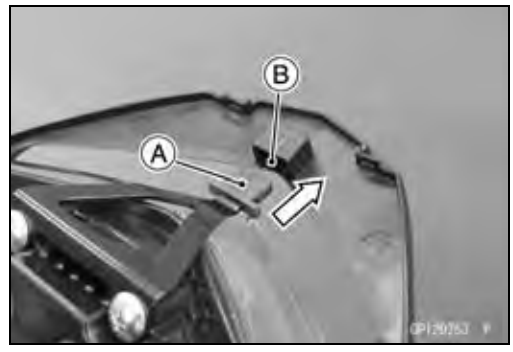

- Pull up the rear fender until the lock tab [A] latches to the frame.
- Tighten the tail/brake light bolts [B] with the washers and clamp [C].
- Connect the tail/brake light lead connector [D].
- Tighten the flap bolts [E] and battery case bolts (see Flap and Rear Fender Installation in the Frame chapter).
- Install the removed parts (see appropriate chapters).

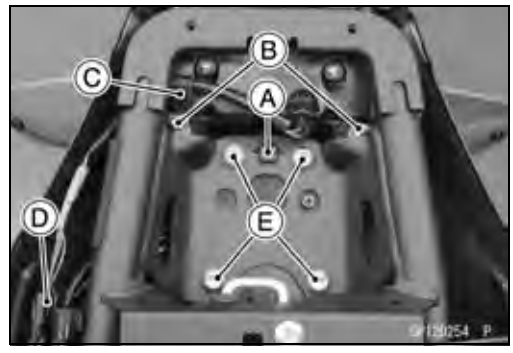

License Plate Light Bulb Replacement

- Remove:
  License Plate Light Cover Screws [A]
  License Plate Light Cover [B] and Lens

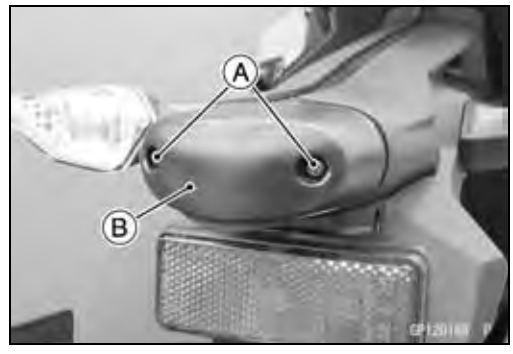

- Pull out the bulb [A] straight from the socket.

NOTICE
Do not turn the bulb. Pull the bulb out to prevent damage to the bulb. Do not use bulb rated for greater wattage then the specified valve.

- Replace the bulb with a new one.
- Insert the new bulb into the socket.
- Install the license plate light cover.
- Tighten the license plate light cover screws.

Lighting System

Headlight/Tail Light Circuit

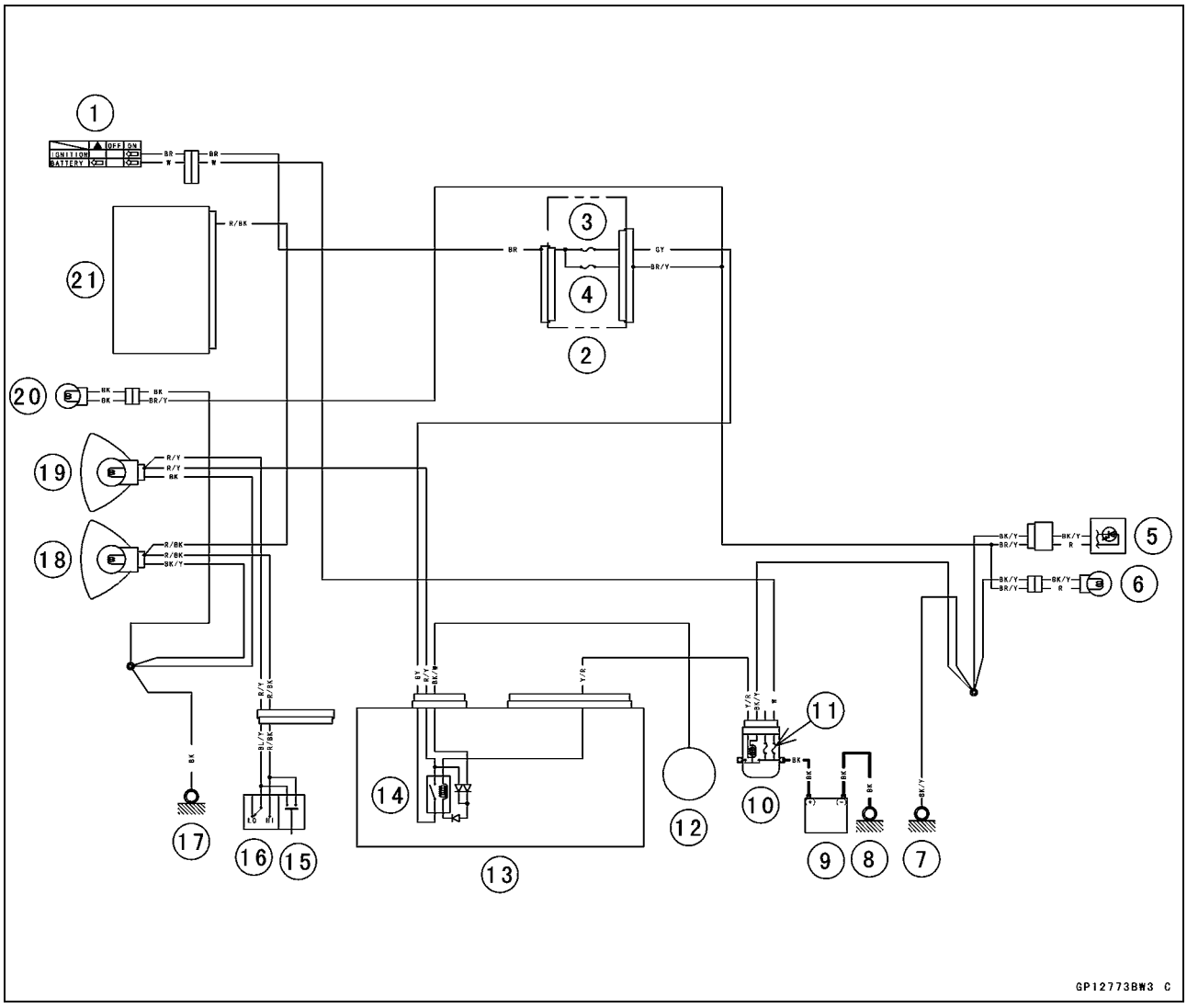

1. Ignition Switch
2. Fuse Box (1)
3. Headlight Relay Fuse 15 A
4. Brake Light/Horn Fuse 7.5 A
5. Tail/Brake Light (LED)
6. License Plate Light 12 V 5 W
7. Frame Ground (1)
8. Engine Ground
9. Battery 12 V 8 Ah
10. Starter Relay
11. Main Fuse 30 A
12. Alternator
13. Relay Box
14. Headlight Circuit Relay
15. Passing Button
16. Dimmer Switch
17. Frame Ground (6)
18. Headlight (High) 12 V 55 W
19. Headlight (Low) 12 V 55 W
20. City Light 12 V 5 W
21. Meter Unit

Turn Signal Light Bulb Replacement

● Remove:
Turn Signal Light Lens Screw [A]
Turn Signal Light Lens Housing [B]

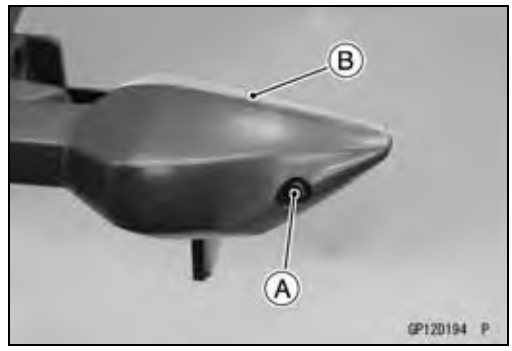

Lighting System

- Turn the socket [A] counterclockwise and remove the lens housing [B].
- Pull out the bulb [C] straight from the socket.

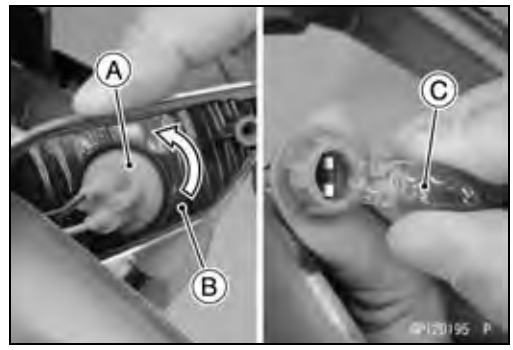

NOTICE
Do not turn the bulb. Pull the bulb out to prevent damage to the bulb. Do not use bulb rated for greater wattage then the specified valve.

- Replace the bulb [A] with a new one.
- Push the new bulb into the socket.
- Insert the socket by aligning its tabs [B] with the cutouts [C] of the lens.
- Turn the socket clockwise until it stops.

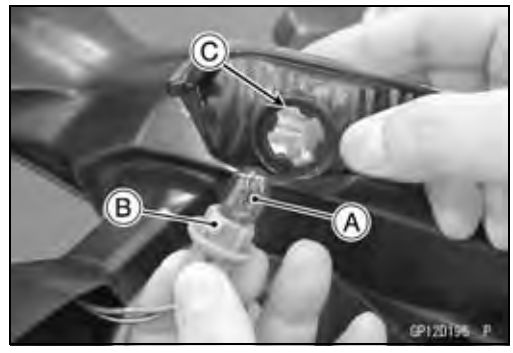

- Fit the lens housing [A] to the light case [B] by inserting the projection [C] on the lens housing to the inside of the light case.
- Tighten the turn signal light lens screw.

Torque - Turn Signal Light Lens Screw: 1.0 N·m (0.10 kgf·m, 8.9 in·lb)

Turn Signal Relay Inspection

- Remove:
  Front Seat (see Front Seat Removal in the Frame chapter)
- Remove the turn signal relay [A].
- Disconnect the turn signal relay connector [B].

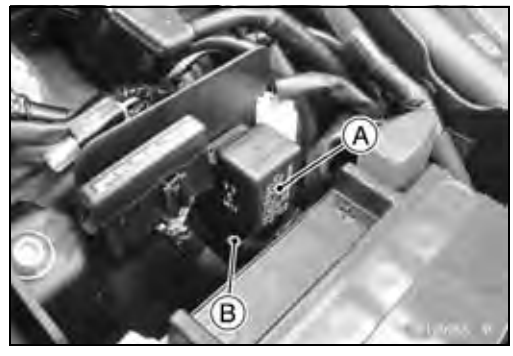

Lighting System

● Connect one 12 V battery and turn signal lights as indicated, and count how many times the lights blink for one minute.
  Turn Signal Relay [A]
  Turn Signal Lights [B]
  12 V Battery [C]

★If the lights do not blink as specified, replace the turn signal relay.

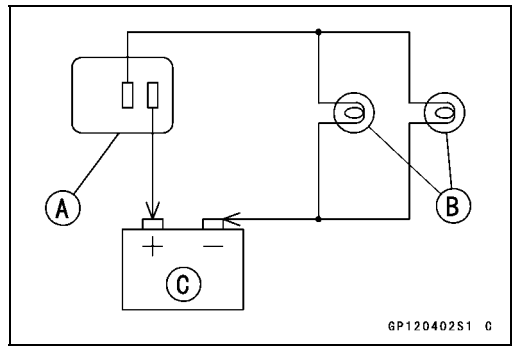

Testing Turn Signal Relay

Load		Blinking Times (c/m*)
The Number of Turn Signal Lights	Wattage (W)	
1**	10	140 ~ 250
2	20	75 ~ 95

(*): Cycle(s) per minute
(**): Correspond to “one light burned out.”

Lighting System

Turn Signal Light Circuit

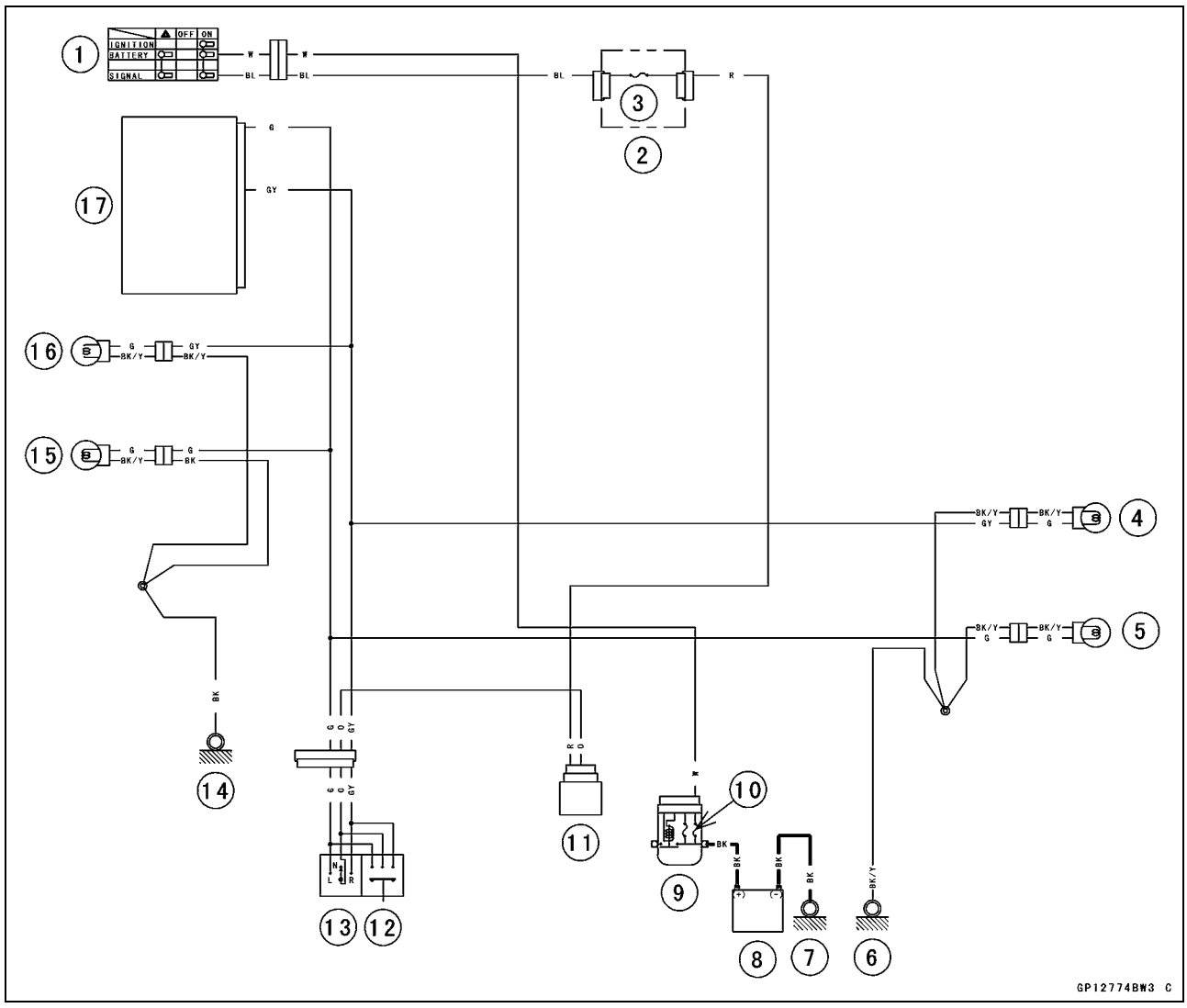

1. Ignition Switch
2. Fuse Box (2)
3. Turn Signal Relay Fuse 7.5 A
4. Rear Right Turn Signal Light 12 V 10 W
5. Rear Left Turn Signal Light 12 V 10 W
6. Frame Ground (1)
7. Engine Ground
8. Battery 12 V 8 Ah
9. Starter Relay
10. Main Fuse 30 A
11. Turn Signal Relay
12. Hazard Switch
13. Turn Signal Switch
14. Frame Ground (6)
15. Front Left Turn Signal Light 12 V 10 W
16. Front Right Turn Signal Light 12 V 10 W
17. Meter Unit

Air Switching Valve

Air Switching Valve Operation Test

● Refer to the Air Suction System Damage Inspection in the Periodic Maintenance chapter.

Air Switching Valve Unit Test

● Remove the air switching valve (see Air Switching Valve Removal in the Engine Top End chapter).

● Connect a tester [A] to the air switching valve terminals as shown.

Air Switching Valve Resistance
Standard: 20 ~ 24 Ω @20°C (68°F)

★If the resistance reading is out of the specified value, replace it with a new one.

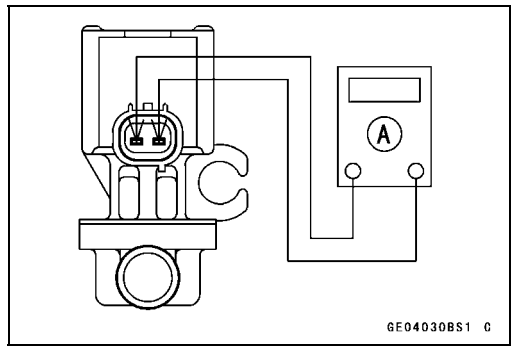

● Connect the 12 V battery [A] to the air switching valve terminals as shown.

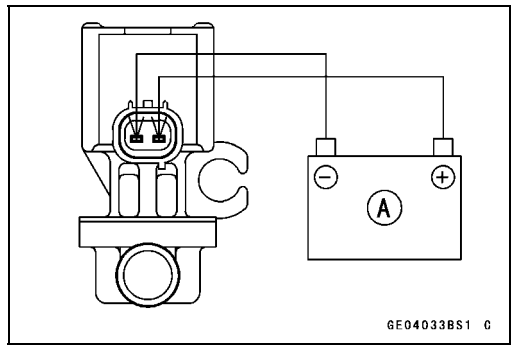

● Blow the air to the intake air duct [A], and make sure does not flow the blown air from the outlet air ducts [B].

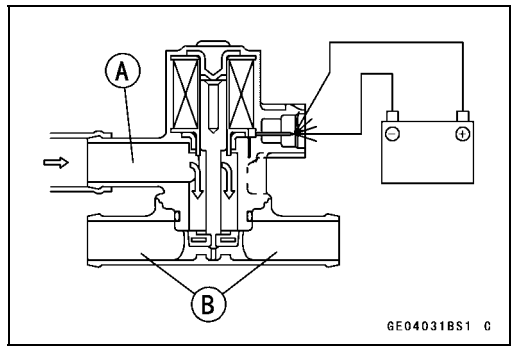

● Disconnect the 12 V battery.

● Blow the air to the intake air duct [A] again, and make sure flow the blown air from the outlet air duct [B].

★If the air switching valve does not operate as described, replace it with a new one.

NOTE

○*To check air flow through the air switching valve, just blow through the air switching valve hose (intake side) [C].*

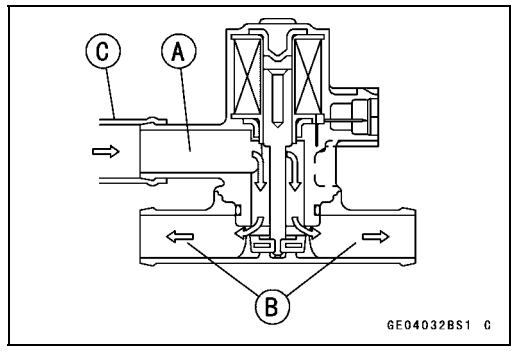

Air Switching Valve

Air Switching Valve Circuit

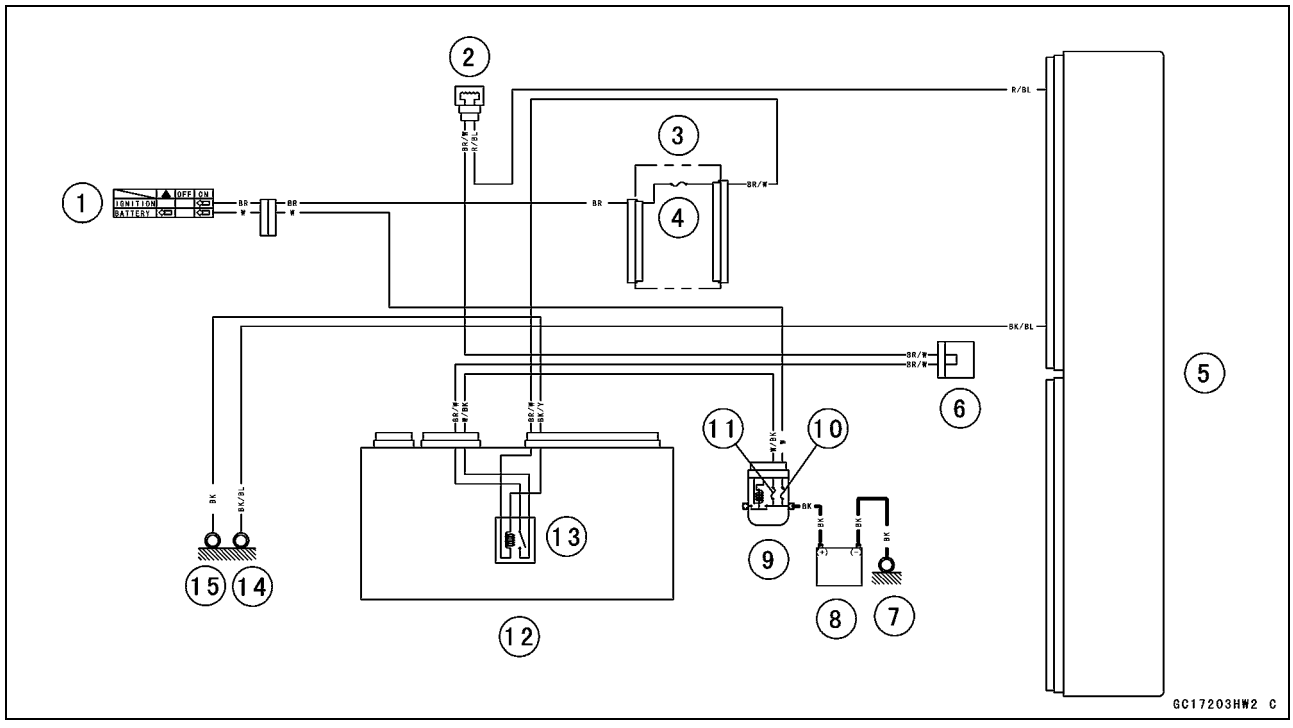

1. Ignition Switch
2. Air Switching Valve
3. Fuse Box (1)
4. Ignition Fuse 15 A
5. ECU
6. Joint Connector B
7. Engine Ground
8. Battery 12 V 8 Ah
9. Starter Relay
10. Main Fuse 30 A
11. ECU Fuse 15 A
12. Relay Box
13. ECU Main Relay
14. Frame Ground (7)
15. Frame Ground (6)

Radiator Fan System

Fan Motor Inspection

- Remove:
  Air Cleaner Housing (see Air Cleaner Housing Removal in the Fuel System (DFI) chapter)
- Disconnect the fan motor lead connector [A] behind the air switching valve.
- Using an auxiliary leads, apply a battery voltage to the fan motor lead connector terminals.

★If the fan does not rotate, the fan motor is defective and must be replaced.

Radiator Fan Circuit

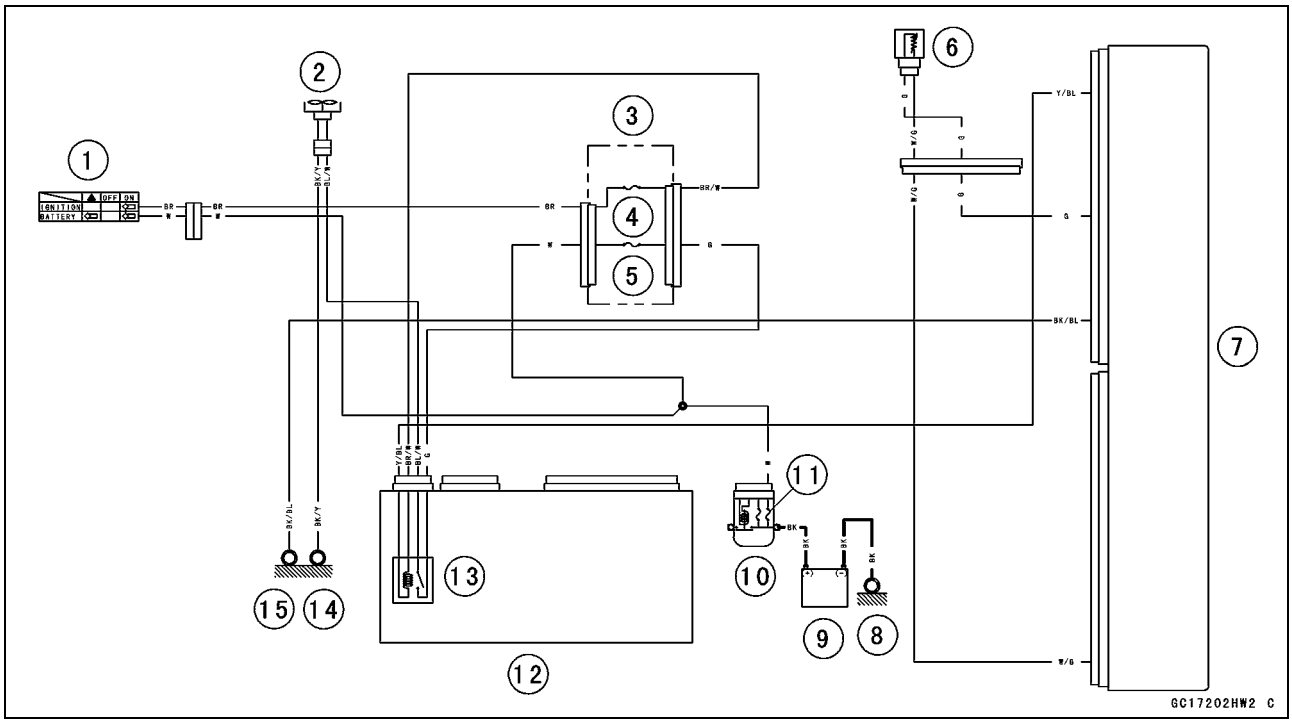

1. Ignition Switch
2. Fan Motor
3. Fuse Box (1)
4. Ignition Fuse 15 A
5. Fan Fuse 15 A
6. Water Temperature Sensor
7. ECU
8. Engine Ground
9. Battery 12 V 8 Ah
10. Starter Relay
11. Main Fuse 30 A
12. Relay Box
13. Radiator Fan Relay
14. Frame Ground (8)
15. Frame Ground (7)

Meter, Gauge, Indicator Unit

Meter Unit Removal

- Remove:
  Meter Cover Bolts [A] and Washers
  Meter Cover [B]

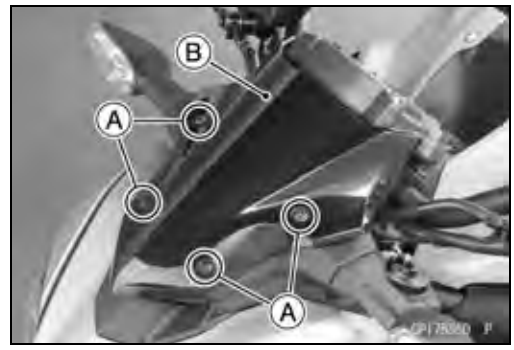

- Slide the dust cover [A], and disconnect the meter connector [B].
- Remove:
  Meter Mounting Bolts [C]
- Pull the meter unit [D] upward to clear the projection.

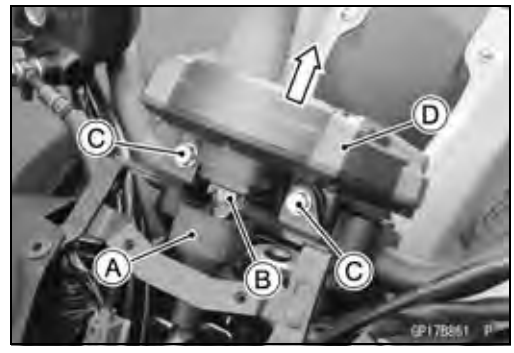

Meter Unit Installation

- Install:
  Dampers [A]
  Collars [B]
- Install the grommet [C] with its larger diameter side [D] facing upward [E], if removed.
- Insert the projection [F] on the meter unit into the grommet.

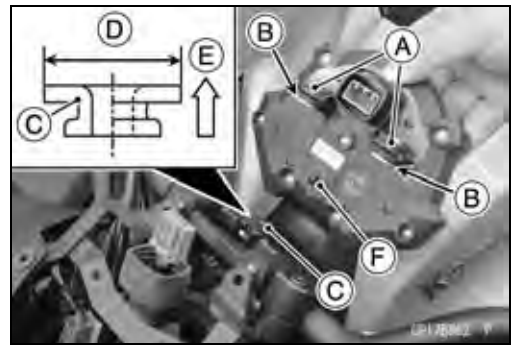

- Tighten the meter mounting bolts [A].
- Connect the meter connector [B], and install the dust cover [C].
- Install the meter cover, and tighten its bolts together with the washers.

Torque - Meter Cover Bolts: 0.5 N·m (0.05 kgf·m, 4.4 in·lb)

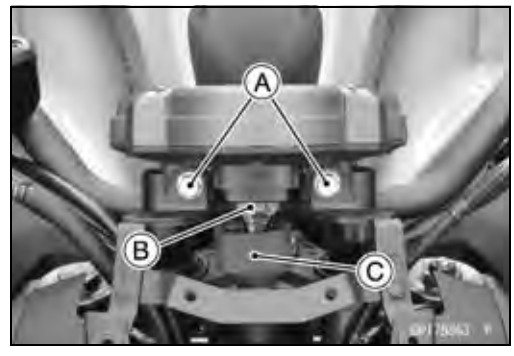

Meter Unit Disassembly/Assembly

- Remove:
  Meter Unit (see Meter Unit Removal)
  Meter Assembly Screws [A]
  Lower Meter Cover [B]

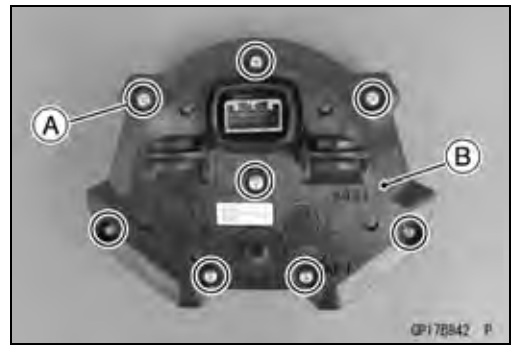

Meter, Gauge, Indicator Unit

- Separate the meter assembly [A] and upper meter cover [B].
- Assembly is the reverse of removal.

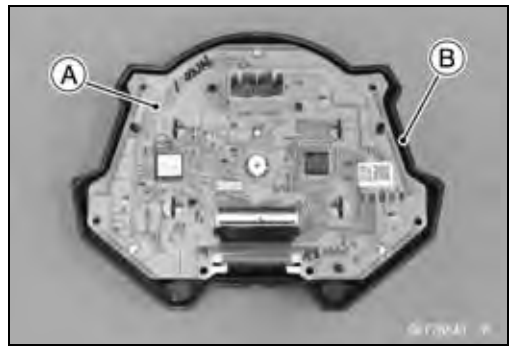

Meter Operation Inspection

Check 1: Meter Unit Switching Inspection

Display Mode Setting

- Turn the ignition switch on and check the following.
- By pushing the left meter button [A] or right meter button [B] each time, check that the display [C] changes as shown.

  Pushing Left Meter Button [D]

  Pushing Right Meter Button [E]

★If the display function does not work, replace the meter assembly.

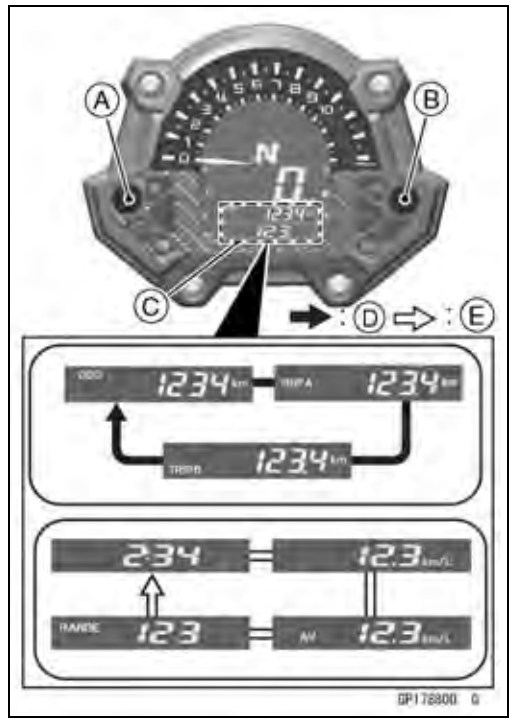

Unit Setting

- Set the ODO mode by pushing the left meter button.
- By pushing the right meter button each time while the left meter button pushed in, check that the display changes as shown.

NOTE

○*Mile/Km Display can alternate between English and metric modes (mile and km) in the digital meter. Make sure that km or mile according to local regulations is correctly displayed before riding.*

★If the display function does not work, replace the meter assembly.

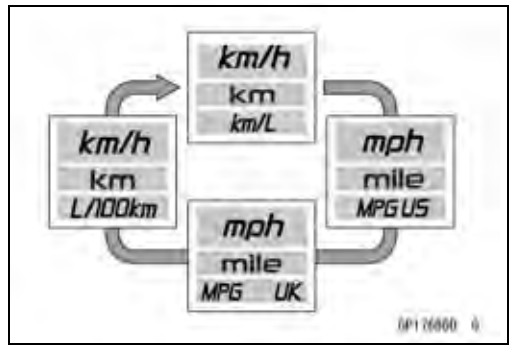

Meter, Gauge, Indicator Unit

Clock Setting

● Set the clock display mode [A] by pushing the right meter button [B].

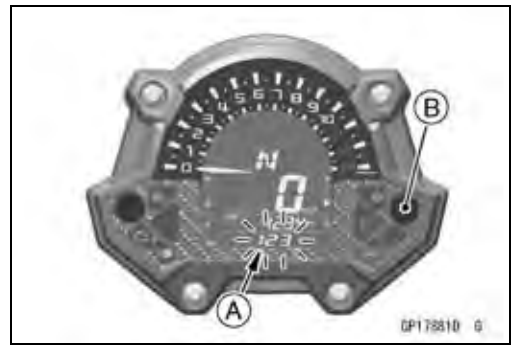

● Push the right meter button and hold it.
○The clock setting menu (hour and minute) should blink.

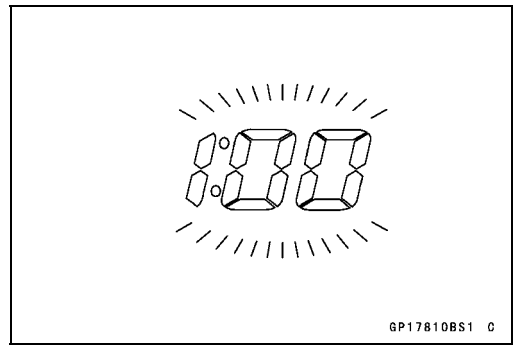

● Push the right meter button and hold it.
○"12h" or "24h" display is appeared.
● Push the left meter button to select "12h" or "24h" [A].

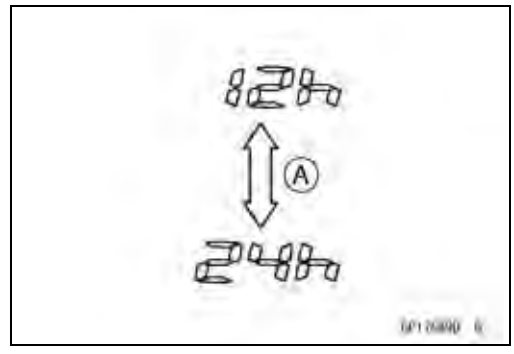

● Push the right meter button.
○The hour display [A] starts blinking.
● By pushing the left meter button each time, check that the hour display changes.

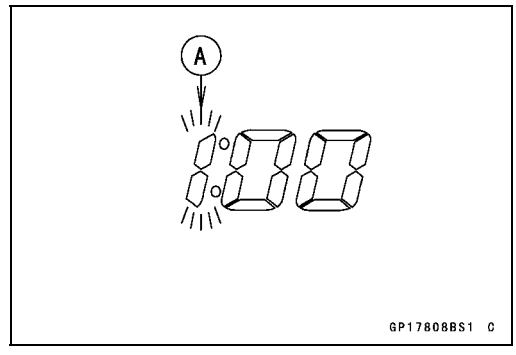

● By pushing the right meter button, check that the hour display decides and minute display [A] starts blinking.
● By pushing the left meter button each time, check that the minute display changes.

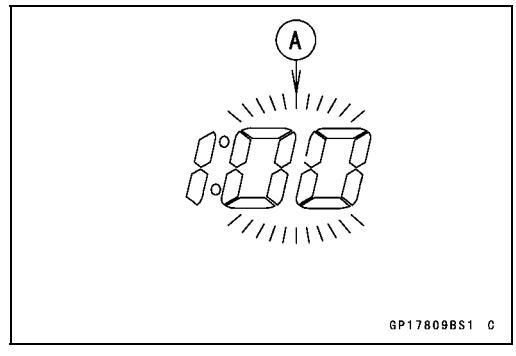

Meter, Gauge, Indicator Unit

- By pushing the right meter button, check that the hour and minute display start blinking.
- By pushing the left meter button, check that the hour and minute display decide.
- When both hour and minute display is blinking, by pushing the right meter button, check that the hour display start blinking. This blinking returns the hour setting display.

★If the display function does not work, replace the meter assembly.

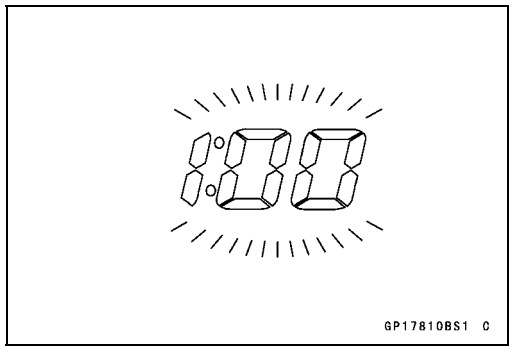

Meter System Inspection

Check 2–1: Battery Warning Indicator Inspection

- When the battery condition is low voltage (10.8 ~ 11.2 V or less) or high voltage (15.5 ~ 16.5 V or more), the battery warning indicator [A] and red warning indicator light (LED) [B] go on.

★If the battery warning indicator and red warning indicator light (LED) go on, inspect the charging voltage (see Charging Voltage Inspection).

★If the charging voltage is good, replace the meter assembly.

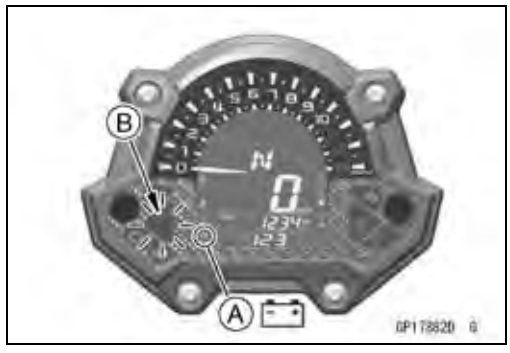

Check 2-2: Gear Position Indication Inspection

- Turn the ignition switch on and shift the transmission gear into neutral position.

○The green neutral indicator light (LED) [A] goes on, and the gear position indicator is display the “N” [B].

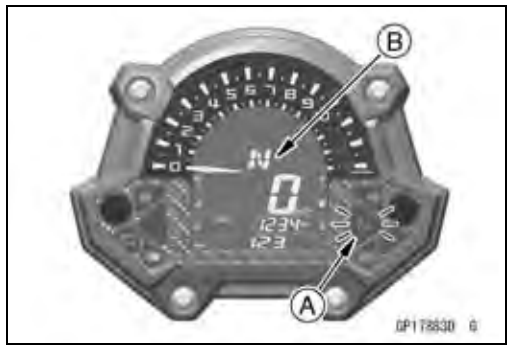

- Set the low gear position, and check that the display changes to “1” mark [A] and the green neutral indicator light (LED) [B] goes off.
- Using the rear stand, raise the rear wheel off the ground.
- Rotate the rear wheel by hand and change the gear position.
- Check that the display corresponding to each gear position (1, N, 2, 3, 4, 5 or 6) appears.

★If the display function does not work, check the following parts.

Gear Position Sensor (see Gear Position Sensor Inspection)

Wiring (see Meter Unit Circuit)

★If the above parts are good, replace the meter assembly and/or ECU.

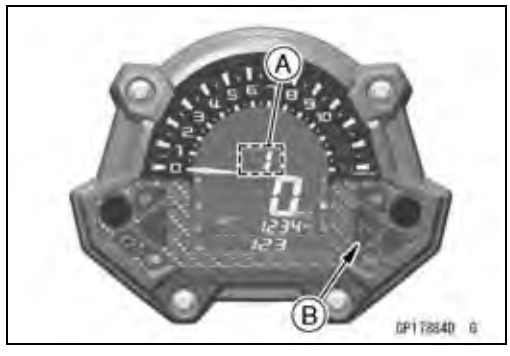

Meter, Gauge, Indicator Unit

Meter Unit Inspection

● Remove the meter unit (see Meter Unit Removal).
[1] Green Left Turn Signal Indicator Light (LED) (+)
[2] Blue High Beam Indicator Light (LED) (+)
[3] Unused
[4] Unused
[5] Fuel Level Gauge
[6] Green Neutral Indicator Light (LED) (–)
[7] Green Right Turn Signal Indicator Light (LED) (+)
[8] Yellow ABS Indicator Light (LED) (Equipped Models) (–)
[9] Tachometer Signal
[10] Rear Wheel Rotation Sensor Signal
[11] Meter Communication Line
[12] Red Warning Indicator Light (LED), Oil Pressure Warning Indicator (–)
[13] Unused
[14] Ground (–)
[15] Ignition (+)
[16] Battery (+)

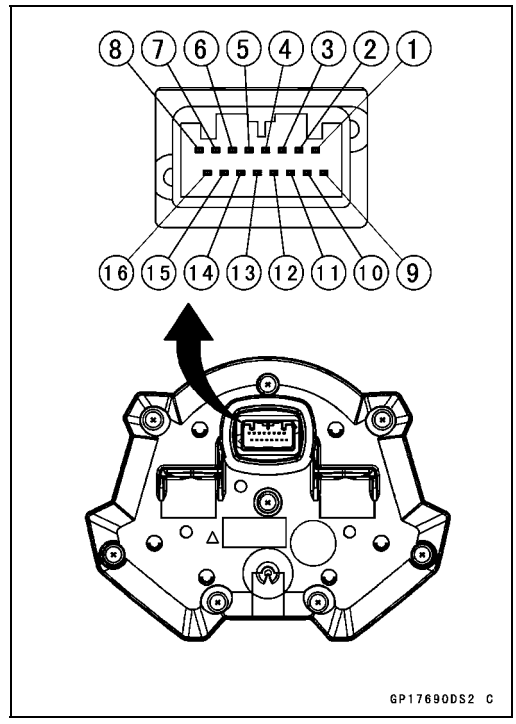

NOTICE

Do not drop the meter unit. Do not short each terminals.

Check 3-1: Meter Unit Primary Operation Check

● Using the auxiliary leads, connect the 12 V battery to the meter unit connector as follows.
○Connect the battery positive (+) terminal to the terminal [16].
○Connect the battery negative (–) terminal to the terminal [14].

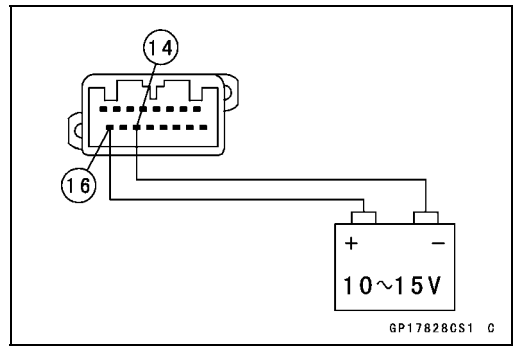

● Connect the terminal [15] to the battery (+) terminal.

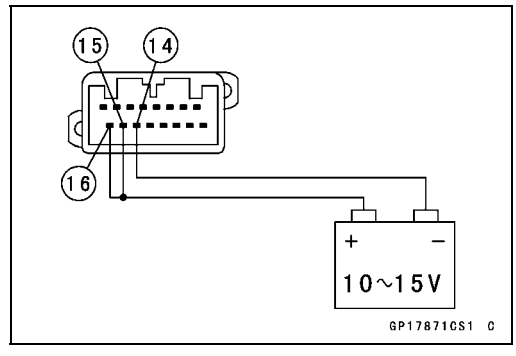

Meter, Gauge, Indicator Unit

● Check the following items.
○The tachometer segments [A] sweeps to the maximum reading, then sweeps back to the minimum reading.
○The LCD display and meter illuminations should turn on.
○All the LCD segments [B] appear for few seconds.
○The red warning indicator light (LED) [C] goes on for few seconds.
○The yellow engine warning indicator light (LED) [D] and yellow ABS indicator light (LED) [E] (if equipped) remains on.
★If the meter unit does not work properly, replace the meter assembly.

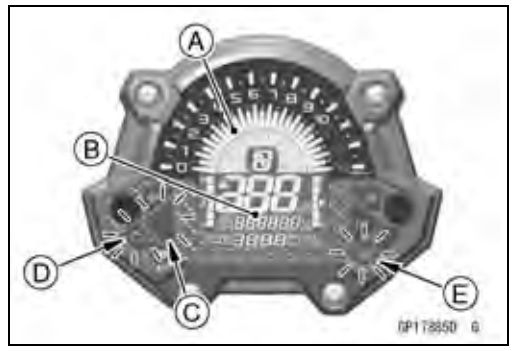

NOTE

○*This meter unit has a failure detection function of the communication. When the communication error was detected, the meter unit alerts the rider by the yellow engine warning indicator light (LED) goes on.*

○Make sure that the all fuel level gauge segments [A] and indicator on the LCD start blinking approx. 5 seconds after turning on the meter unit.
★If the fuel level gauge does not work properly, replace the meter assembly.

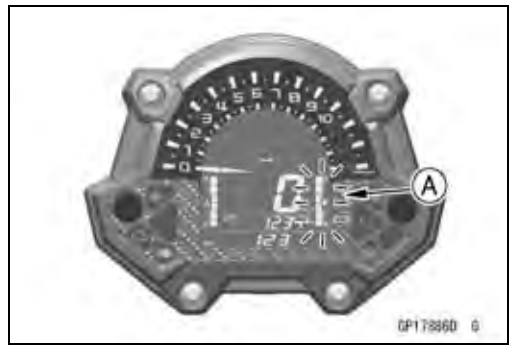

NOTE

○*This meter unit has a failure detection function (for open or short) of the fuel level gauge. When the fuel level gauge is open or short, the meter unit alerts the rider by the all fuel level gauge segments blink in the display.*

○Make sure that the coolant temperature gauge segments [A] and "- -" message [B] on the gear position indicator start blinking approx. 10 seconds after turning on the meter unit.

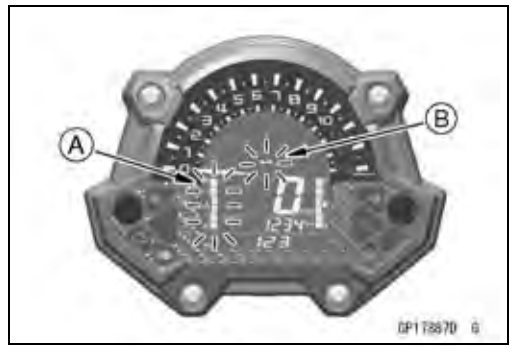

NOTE

○*This meter unit has a failure detection function (for open or short) of the fuel level gauge. When the fuel level gauge is open or short, the meter unit alerts the rider by the all coolant temperature gauge segments blink in the display.*

★If the fuel level gauge does not work properly, replace the meter assembly.

Check 3-2: Meter Communication Line (Service Code 39) Check
● Connect the leads in the same circuit as Check 3-1.
● The yellow engine warning indicator light (LED) should remains on.

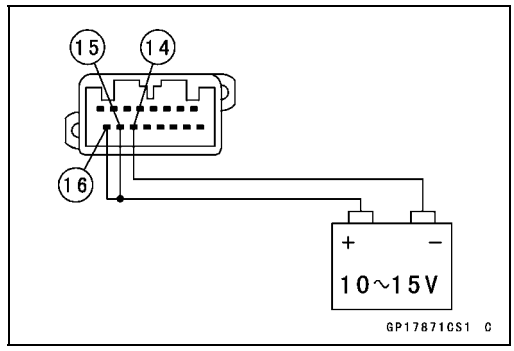

Meter, Gauge, Indicator Unit

● Set the ODO mode [A] by pushing the left meter button [B].
● Push the left meter button and right meter button [C] simultaneously for more than 2 seconds.

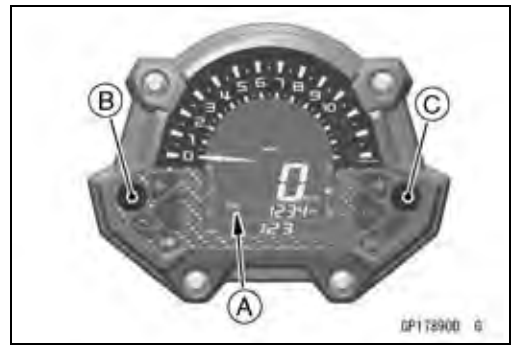

● Check the following items.
○The number “39” [A] in the display appears.
● Push the left and right meter buttons again for more than 2 seconds.
● Check the following items.
○The display returns ODO mode from number “39”.
★If the meter unit does not work, replace the meter assembly.

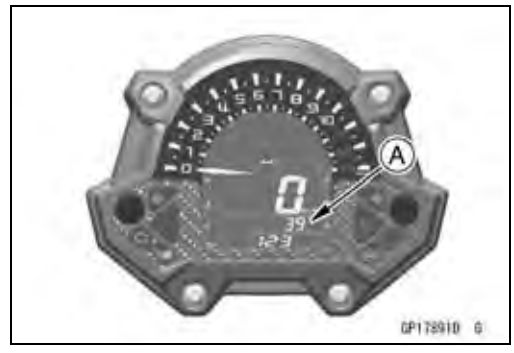

NOTE

○*The number “39” is service code of Self-Diagnosis (see Fuel System (DFI) chapter). It is the service code of the meter communication line error.*
○*The number “39” in the display disappear when the meter unit is connected to main harness of the normal motorcycle.*

Check 3-3: Immobilizer Blinking Mode Inspection (Equipped Models)

● Connect the leads in the same circuit as Check 3-1.
● Disconnect the terminal [15].

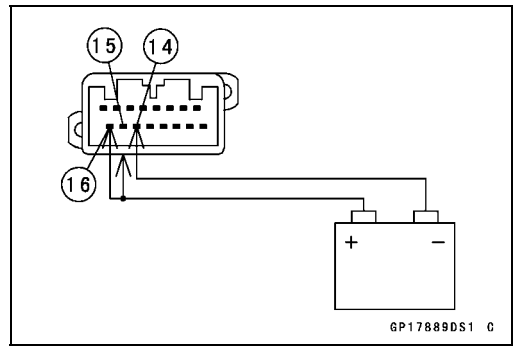

● Check that the red warning indicator light (LED) [A] starts blinking (Immobilizer Warning Indicator Blinking Mode).
● Push the left meter button [B] and right meter button [C] more than 2 seconds, within 20 seconds after the terminal [15] disconnected.
● Check that the red warning indicator light (LED) goes on 1 second, and then the indicator goes off (Immobilizer No Blinking Mode).

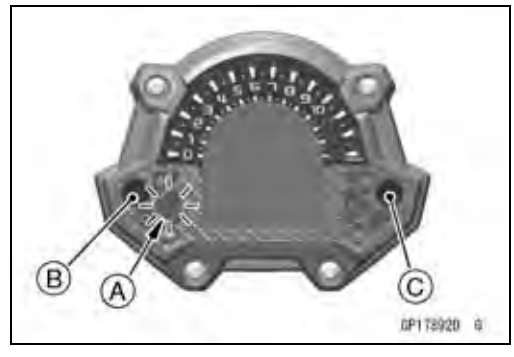

NOTE

○*For this inspection, be sure the battery is 12.2 V or more. Immobilizer Blinking Mode does not work, when the battery voltage is less than 12 ±0.2 V.*

Meter, Gauge, Indicator Unit

● Connect the terminal [15] to the battery (+) terminal.
● And then, disconnect the terminal [15].

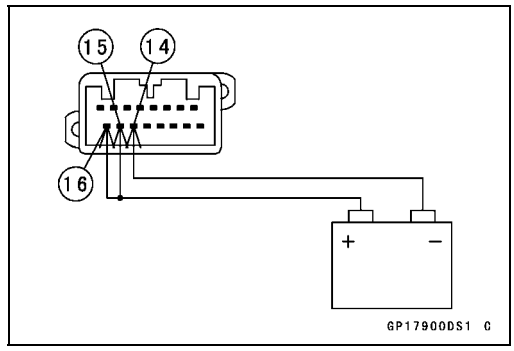

● Push the left meter button [A] and right meter button [B] more than 2 seconds, within 20 seconds after the terminal [15] disconnected.
● Check that the red warning indicator light (LED) [C] goes on 1 second, and then the indicator starts blinking (Immobilizer Warning Indicator Blinking Mode).
★If the meter function does not work, replace the meter assembly.

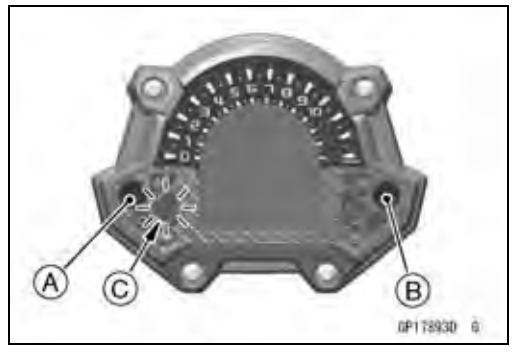

Check 3-4: Blue High Beam Indicator Light (LED) Inspection
● Connect the terminal [2] to the battery (+) terminal.
● Connect the terminal [14] to the battery (–) terminal.

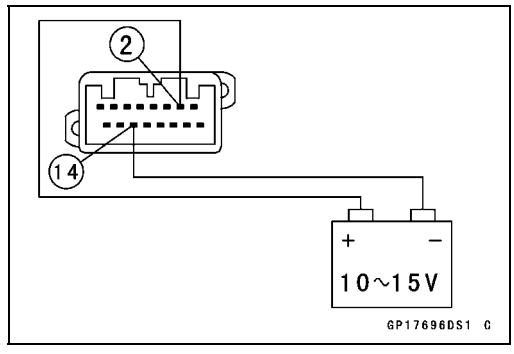

● Check that the blue high beam indicator light (LED) [A] goes on.
★If the indicator light (LED) does not go on, replace the meter assembly.

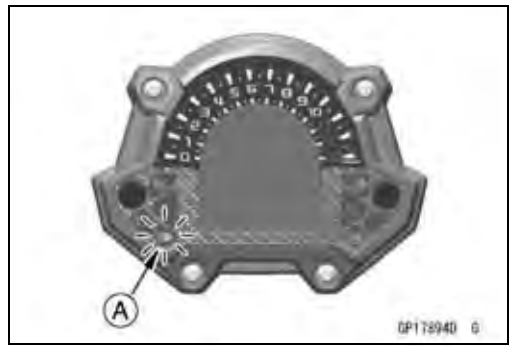

Check 3-5: Green Left Turn Signal Indicator Light (LED) Inspection
● Connect the terminal [1] to the battery (+) terminal.
● Connect the terminal [14] to the battery (–) terminal.

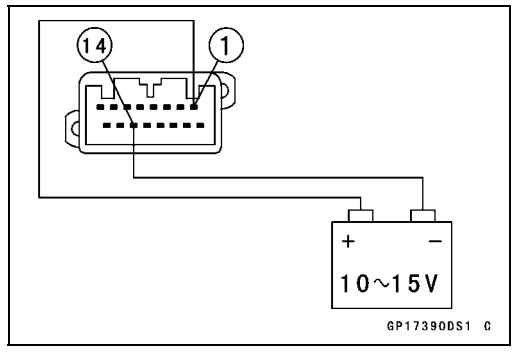

Meter, Gauge, Indicator Unit

● Check that the green left turn signal indicator light (LED) [A] goes on.
★If the indicator light (LED) does not go on, replace the meter assembly.

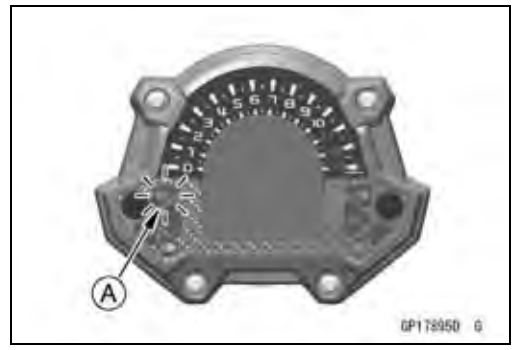

Check 3-6: Green Right Turn Signal Indicator Light (LED) Inspection
● Connect the terminal [7] to the battery (+) terminal.
● Connect the terminal [14] to the battery (–) terminal.

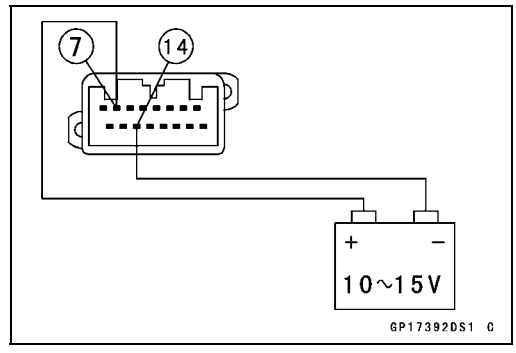

● Check that the green right turn signal indicator light (LED) [A] goes on.
★If the indicator light (LED) does not go on, replace the meter assembly.

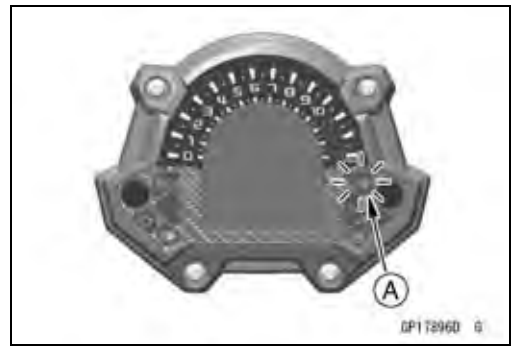

Check 3-7: Green Neutral Indicator Light (LED) Inspection
● Connect the leads in the same circuit as Check 3-1.
● Connect the terminal [6] to the battery (–) terminal.

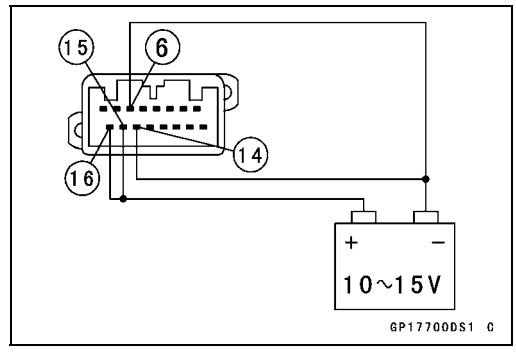

● Check that the green neutral indicator light (LED) [A] goes on.
★If the indicator light (LED) does not go on, replace the meter assembly.

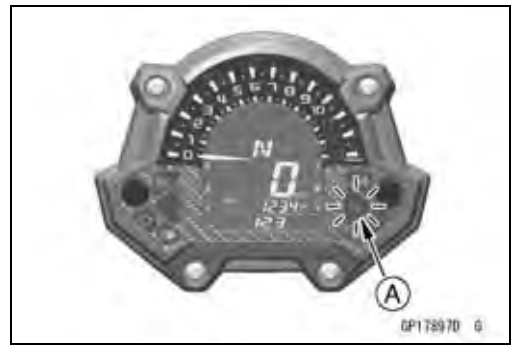

Meter, Gauge, Indicator Unit

Check 3-8: Yellow ABS Indicator Light (LED) Inspection (Equipped Models)

● Connect the leads in the same circuit as Check 3-1.
○The yellow ABS indicator light (LED) goes on.
● Connect the terminal [8] to the battery (–) terminal.

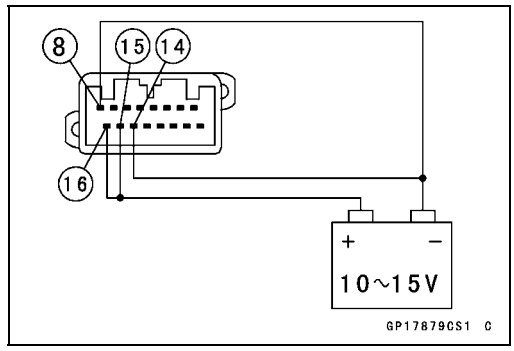

● Check that the yellow ABS indicator light (LED) [A] goes off.
★If the indicator light (LED) does not go off, replace the meter assembly.

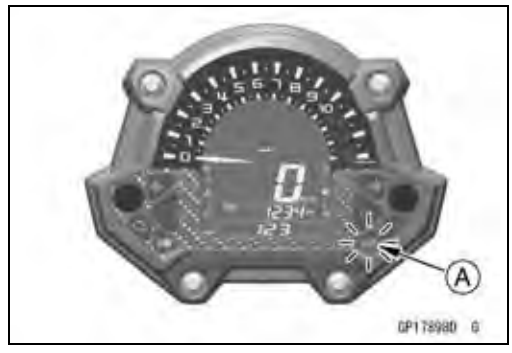

Check 3-9: Red Warning Indicator Light (LED) Inspection (Oil Pressure Warning)

● Connect the leads in the same circuit as Check 3-1.
● Connect the terminal [12] to the battery (–) terminal.

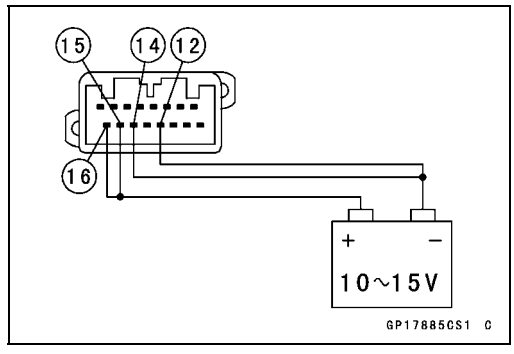

● Check that the oil pressure warning indicator [A] and red warning indicator light (LED) [B] go on.
★If the oil pressure warning indicator and indicator light (LED) does not go on, replace the meter assembly.

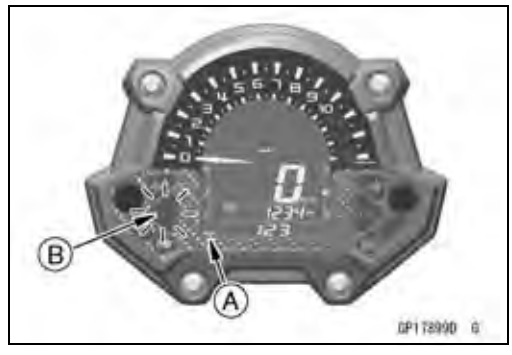

Check 3-10: Fuel Gauge Inspection

● Connect the leads in the same circuit as Check 3-1.
○The all segments of the fuel gauge in the display will blink.
● Connect the variable rheostat [A] between the terminal [5] and the battery (–) terminal.

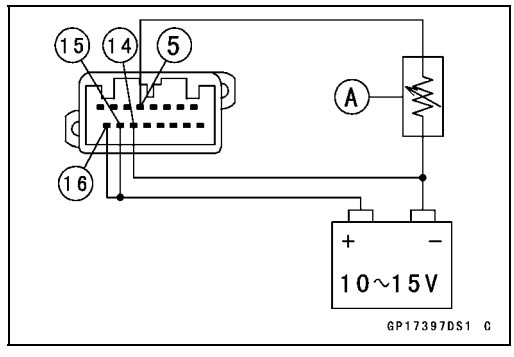

Meter, Gauge, Indicator Unit

● Check that the number of segments on the fuel level gauge [A] matches the resistance value of the variable rheostat.

○When the terminal [5] is connected, 1 segment in the fuel level gauge should appear about every 15 seconds.

Variable Rheostat Resistance (Ω)	Display Segments
15	6 segments go on
40	5 segments go on
70	4 segments go on
100	3 segments go on
130	2 segments go on
180	1 segment goes on
220	1 segment and fuel level warning indicator blink

★If the display function does not work, replace the meter assembly.

Check 3-11: Speedometer Inspection

● Connect the leads in the same circuit as Check 3-1.

● The speed equivalent to the input frequency is indicated in the oscillator [A], if the square wave is input into terminal [10].

○Indicates approximately 60 km/h if the input frequency is approximately 388 Hz.

○Indicates approximately 60 mph if the input frequency is approximately 625 Hz.

★If the meter function does not work, replace the meter assembly.

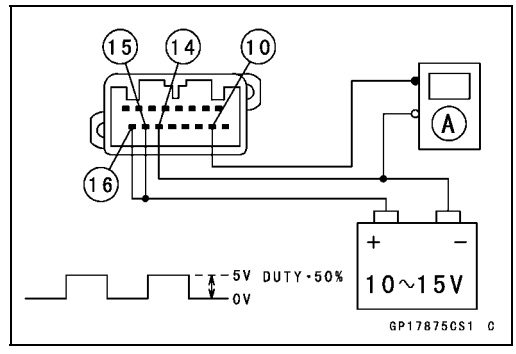

NOTE

○*The input frequency of the oscillator adds the integrated value of the odometer.*

○*The integrated value of the odometer cannot be reset.*

Check 3-12: Odometer Check

● Check the odometer with the speedometer check in the same way.

★If value indicated in the odometer is not added, replace the meter assembly.

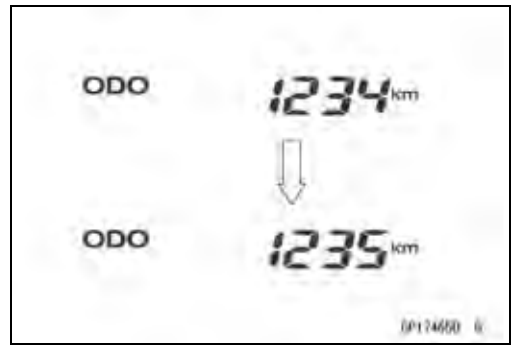

NOTE

○*The data is maintained even if the battery is disconnected.*

○*When the figures come to 999999, they are stopped and locked.*

○*The integrated value of the odometer cannot be reset.*

Meter, Gauge, Indicator Unit

Check 3-13: Trip A/B Meter Check

- Check the trip meter with the speedometer in the same way.

★If value indicated in the trip meter is not added, replace the meter assembly.

NOTE

○*The integrated value of the odometer cannot be reset.*

- Check that when the right meter button is pushed for more than two seconds, the figure display turns to 0.0.

★If the figure display does not indicate 0.0, replace the meter assembly.

Check 3-14: Tachometer Inspection

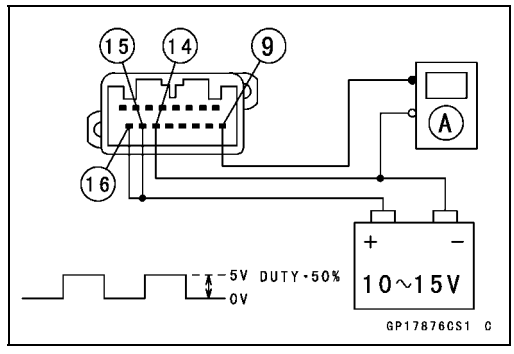

- Connect the leads in the same circuit as Check 3-1.
- The engine speed (rpm) equivalent to the input frequency is indicated in the oscillator [A], if the square wave is input into terminal [9].

○Indicates approximately 6 000 rpm if the input frequency is approximately 200 Hz.

★If the meter function does not work, replace the meter assembly.

Check 3-15: Other Inspection

○The following items are displayed while running.
AVERAGE
CURRENT
RANGE
ECO Mark

- When the above item is faulty indication check the following items.
  Wiring (see Wiring Inspection)
  ECU Communication Line (see ECU Communication Line Inspection in the Fuel System (DFI) chapter)
  Fuel Injectors (see Fuel Injectors (Service Code 41, 42) section in the Fuel System (DFI) chapter)
  Rear Wheel Rotation Sensor (see Rear Wheel Rotation Sensor (Service Code 24) section in the Fuel System (DFI) chapter)
  Crankshaft Sensor (see Crankshaft Sensor Inspection)

★If the above items are good, replace the meter assembly and/or ECU.

Fuel Level Sensor Line Self-Diagnosis Mode Inspection

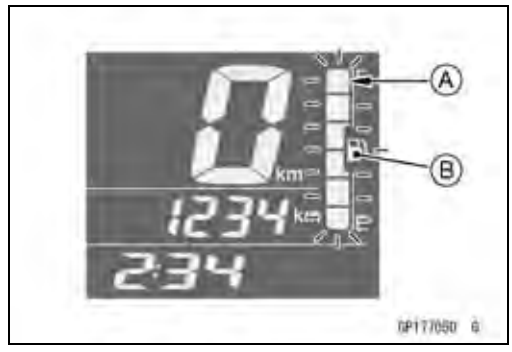

NOTE

○*Usually when the open or short of the fuel level sensor circuit is detected, it becomes the Fuel Level Sensor Line Self-Diagnosis Mode.*

○The all segments of the fuel level gauge [A] and fuel level warning indicator [B] in the display will blink. (This function is Fuel Level Sensor Line Self-Diagnosis Mode.)

★If the meter enters the self-diagnosis mode when the meter is installed in the motorcycle, check the fuel level sensor (see Fuel Level Sensor Inspection) and wiring.

★If the fuel level sensor and wiring are good, replace the meter assembly.

Meter, Gauge, Indicator Unit

Meter Circuit (ZR900A)

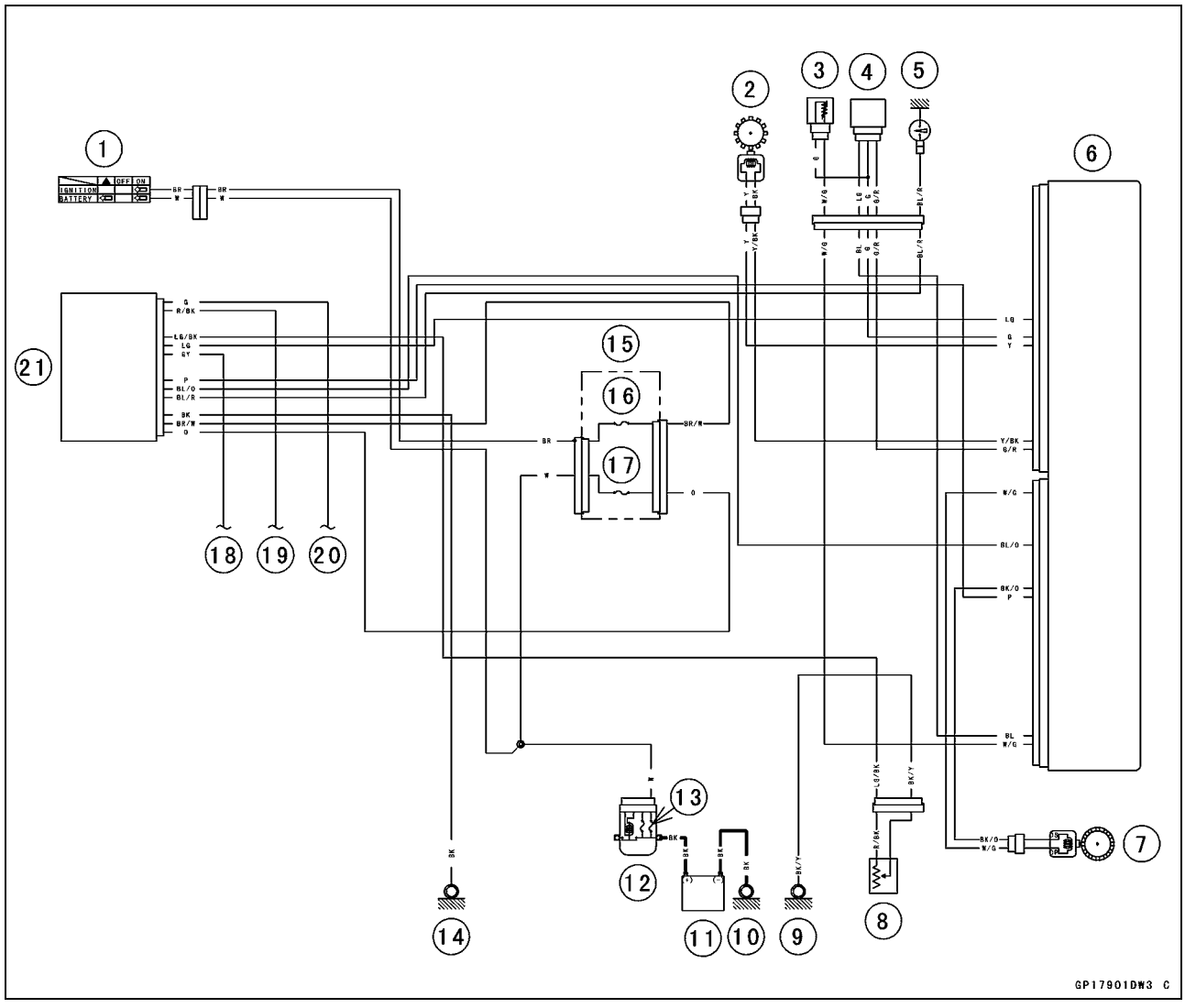

1. Ignition Switch
2. Crankshaft Sensor
3. Water Temperature Sensor
4. Gear Position Sensor
5. Oil Pressure Switch
6. ECU
7. Rear Wheel Rotation Sensor
8. Fuel Level Sensor
9. Frame Ground (2)
10. Engine Ground
11. Battery 12 V 8 Ah
12. Starter Relay
13. Main Fuse 30 A
14. Frame Ground (10)
15. Fuse Box (1)
16. Ignition Fuse 15 A
17. Meter Fuse 7.5 A
18. to Turn Signal Switch (Right)
19. to Headlight Hi Beam
20. to Turn Signal Switch (Left)
21. Meter Unit

Meter, Gauge, Indicator Unit

Meter Circuit (ZR900B)

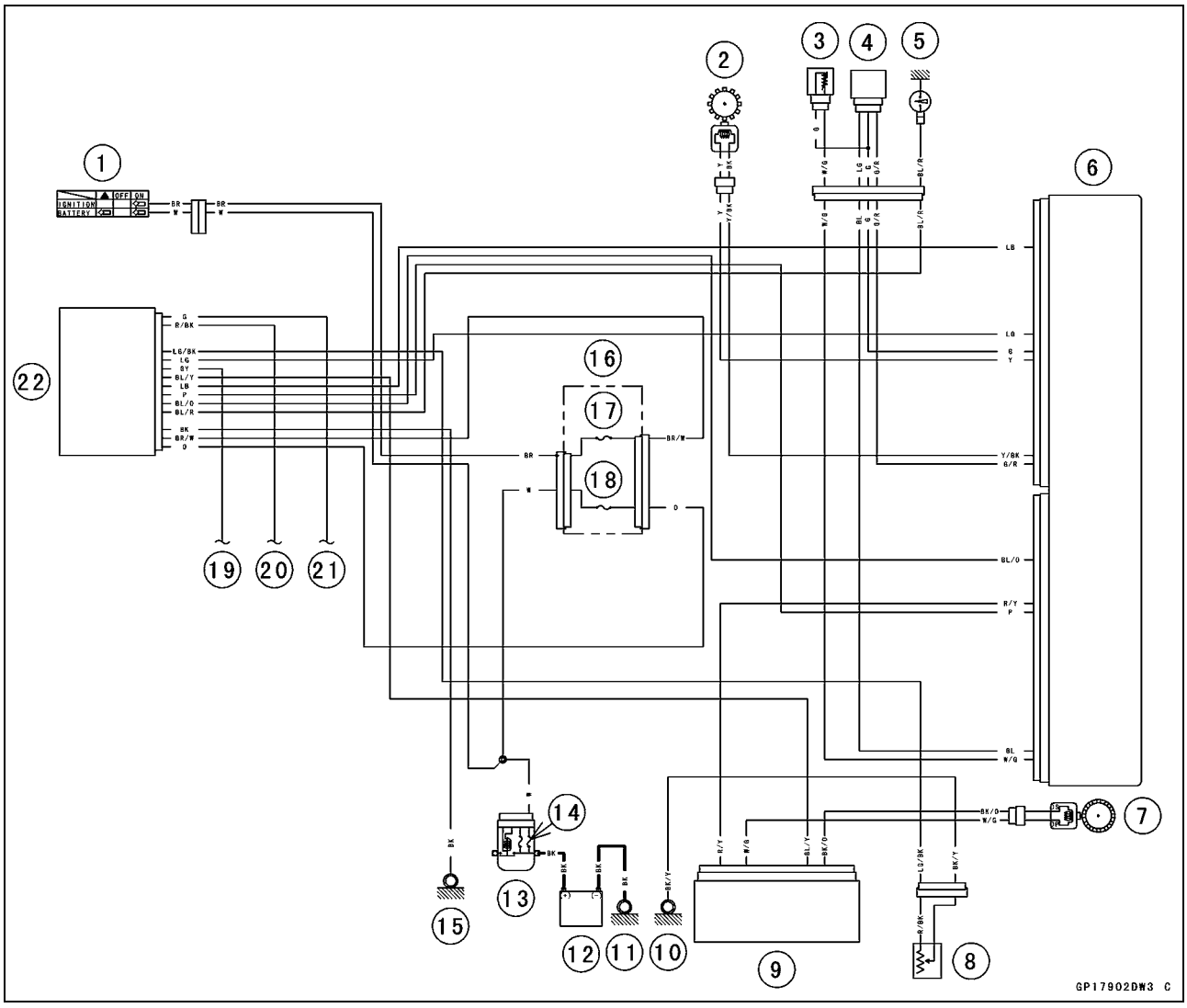

1. Ignition Switch
2. Crankshaft Sensor
3. Water Temperature Sensor
4. Gear Position Sensor
5. Oil Pressure Switch
6. ECU
7. Rear Wheel Rotation Sensor
8. Fuel Level Sensor
9. ABS Hydraulic Unit
10. Frame Ground (2)
11. Engine Ground
12. Battery 12 V 8 Ah
13. Starter Relay
14. Main Fuse 30 A
15. Frame Ground (10)
16. Fuse Box (1)
17. Ignition Fuse 15 A
18. Meter Fuse 7.5 A
19. to Turn Signal Switch (Right)
20. to Headlight Hi Beam
21. to Turn Signal Switch (Left)
22. Meter Unit

Immobilizer System (Equipped Models)

This motorcycle is equipped with an immobilizer system to protect the motorcycle from theft. This system provides a theft proof device by means of matching a code between the inbuilt key transponder and ECU. If the code does not match, ignition system, injectors, subthrottle valve actuator and exhaust butterfly valve actuator will not operate and the engine will not start.

Abstract

- Do not keep more than one immobilizer key of any system on a key ring. Jamming of the key code signal may occur and the operation of the system may be affected.
- The red warning indicator light (LED) will blink for a period of 24 hours once the ignition switch has been switched off and the key removed. This blinking can be set to on or off as desired by holding the upper and lower meter buttons down for 2 seconds within 20 seconds of switching the ignition off.
- If all coded keys are lost the ECU and ignition switch will have to be replaced.
- The immobilizer system can not function until the ignition key code is registered in the ECU.
- A total of five keys can be registered in the ECU at any one time.

Operational Cautions

1. Do not put two keys of any immobilizer system on the same key ring.
2. Do not submerge any key in water.
3. Do not expose any key to excessively high temperature.
4. Do not place any key close to magnet.
5. Do not place a heavy item on any key.
6. Do not grind any key or alter its shape.
7. Do not disassemble the plastic part of any key.
8. Do not drop the key and/or apply any shocks to the key.
9. When a ignition key is lost, the user should go to his dealer to invalidate the lost key registration in the ECU.
10. When the all ignition keys are lost, the user should go to his dealer and have a new ECU installed and register the ignition keys.

NOTE

○*No.9 and 10 are strongly recommended to the customer to ensure security of the motorcycle.*

Key Registration

Case 1: When additional spare ignition key is required.

- Prepare a new spare ignition key.
- Cut the key in accordance with the shape of the current ignition key.
- Remove the front seat (see Front Seat Removal in the Frame chapter).
- Remove the immobilizer/Kawasaki diagnostic system connector cap [A].

- Connect the key registration unit [A] and key registration adapter [B] as shown.

Special Tools - Key Registration Unit: 57001-1582
Key Registration Adapter: 57001-1746

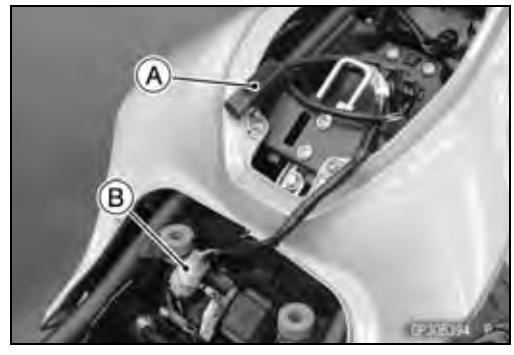

Immobilizer System (Equipped Models)

● Insert the registered ignition key to the ignition switch and turn it to “ON.”

Verified

○The red warning indicator light (LED) and immobilizer warning indicator [A] blink to display the registration mode (go to the next step).

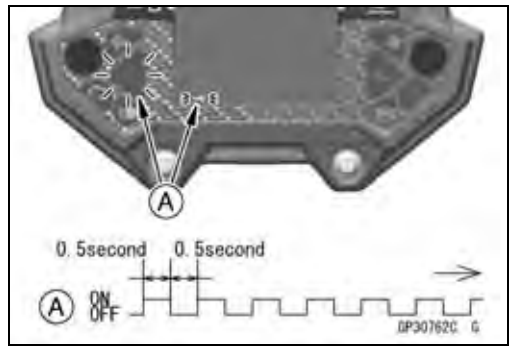

Not Verified

○The red warning indicator light (LED) and immobilizer warning indicator [A] blink to display the collation error (refer to the following failure illustrations).

Immobilizer Amplifier Failure

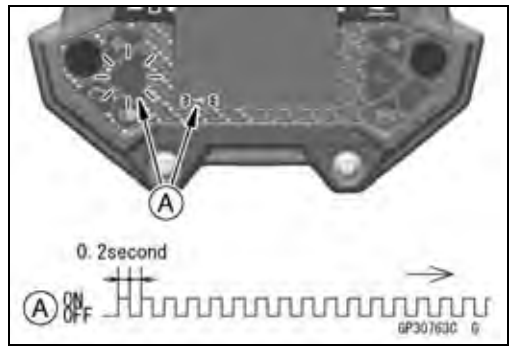

Registered Ignition Key Collation Error

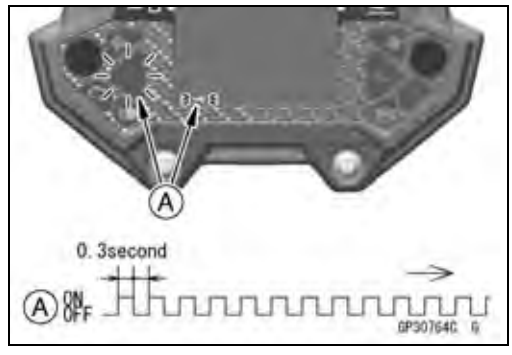

● Turn the registered ignition key to “OFF” and remove the registered ignition key.

★If there are other registered ignition keys, they should all do the procedure above.

○The red warning indicator light (LED) and immobilizer warning indicator [A] blink continuously to display that the ECU is in the registration mode for 15 seconds.

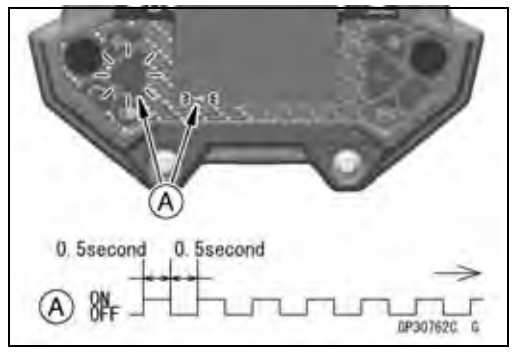

NOTE

○*Insert next key and turn it to “ON” within 15 seconds after previous key is turned to “OFF” and removed otherwise registration mode will be ended and the red warning indicator light (LED) and immobilizer warning indicator stops blinking.*

○*To return to the registration mode start the registered ignition key(s) verification procedure. This applies to all ignition key registration.*

● Insert the ignition key 1 to the ignition switch and turn it to “ON.”

NOTE

○*Keep the other ignition key away from the immobilizer antenna.*

Immobilizer System (Equipped Models)

○If there is any problem in the registration, the red warning indicator light (LED) and immobilizer warning indicator [A] blink to display the collation error.

Immobilizer Amplifier Failure

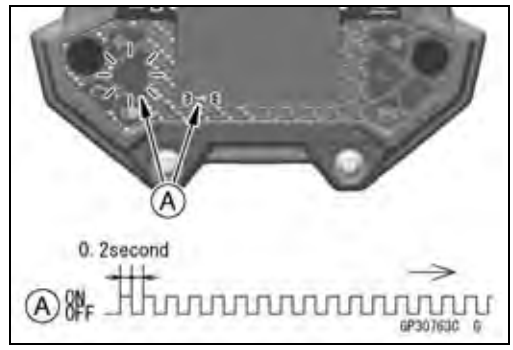

When Registered Ignition Key is Inserted.

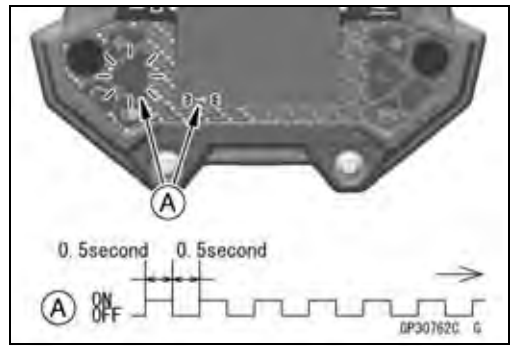

Ignition Key Collation Error

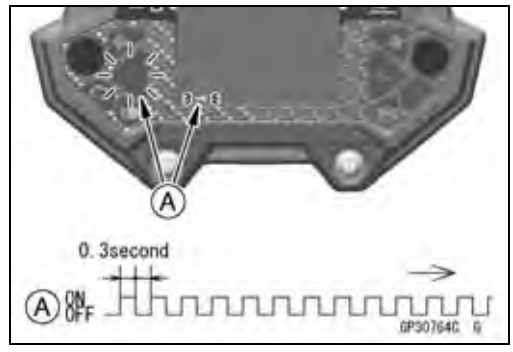

● The ignition key 1 is successfully registered in the ECU.

○The red warning indicator light (LED) and immobilizer warning indicator [A] blink 3 times and stops for 1 second and then repeats this cycle.

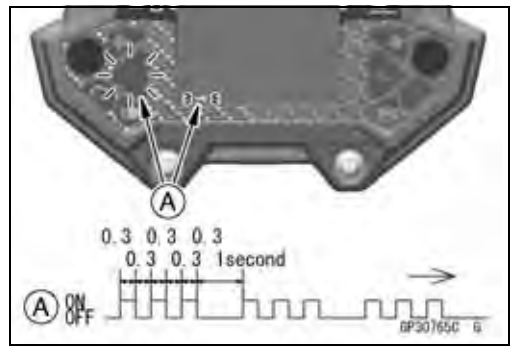

Immobilizer System (Equipped Models)

● Turn the ignition key 1 to “OFF” and remove the ignition key 1.

○The red warning indicator light (LED) and immobilizer warning indicator [A] blink to display the registration mode.

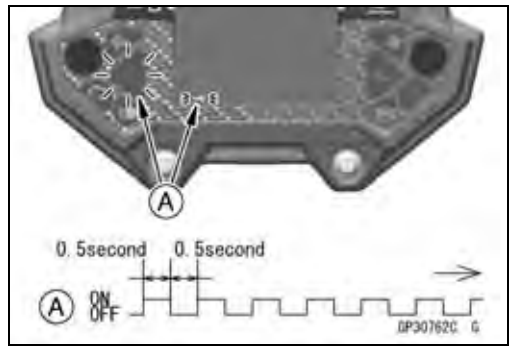

NOTE

○*Turn to “OFF” the ignition switch and wait for the period of 15 seconds or more. The registration mode automatically finishes and the red warning indicator light (LED) and immobilizer warning indicator will switch off.*

○*This procedure registered the registered ignition key and one ignition key.*

○*Continue with the procedure to register the second and later keys before the 15 seconds period has elapsed.*

● Insert the ignition key 2 to the ignition switch and turn it to “ON.”

○If there is any problem in the registration, the red warning indicator light (LED) and immobilizer warning indicator [A] blink to display the collation error.

Immobilizer Amplifier Failure

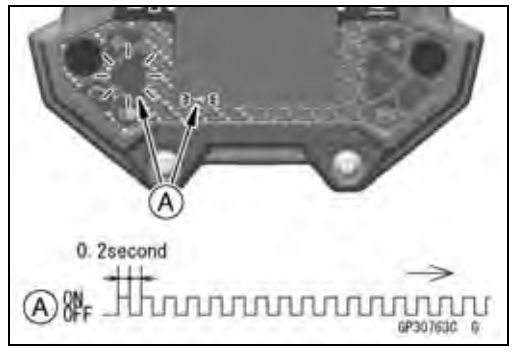

When Registered Ignition Key is Inserted.

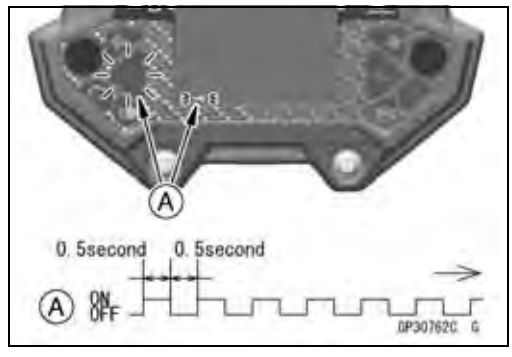

Ignition Key Collation Error

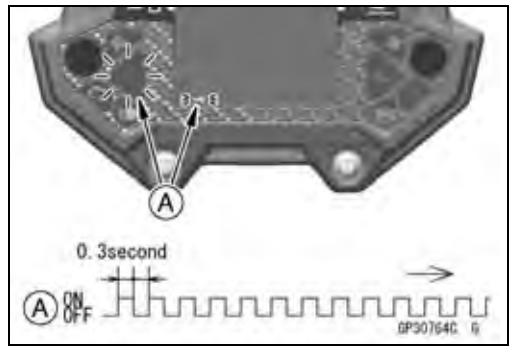

Immobilizer System (Equipped Models)

● The ignition key 2 is registered in the ECU.
○The red warning indicator light (LED) and immobilizer warning indicator [A] blink 4 times and stops for 1 second and then repeats this cycle.
○This procedure has registered the 2 ignition keys.
● Continue with the procedure to register an additional one ignition key.

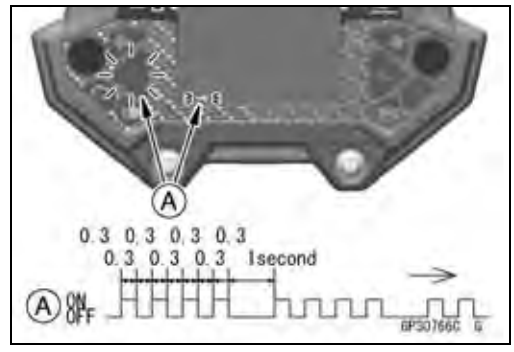

NOTE

○*The ECU can store up the five key codes.*

Red Warning Indicator Light (LED) and Immobilizer Warning Indicator Blink

	Indicators Blinks	Indicators Stop	Remarks
Ignition Key 3	5 times	1 second	Repeat

● Turn to “OFF” the ignition switch and wait for period of more than 15 seconds.
● The registration mode automatically ends.
● The red warning indicator light (LED) [A] goes off.

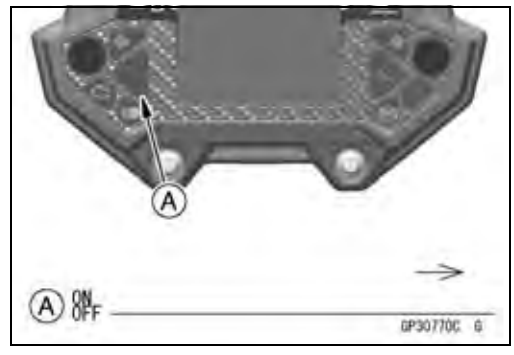

● Remove the key registration unit, key registration adapter and install the immobilizer/Kawasaki diagnostic system connector cap.

NOTE

○*Turn the ignition switch to “ON” with the registered ignition key.*
○*Check that the engine can be started using all registered ignition keys.*

Immobilizer System (Equipped Models)

Spare Ignition Key Registration Flow Chart

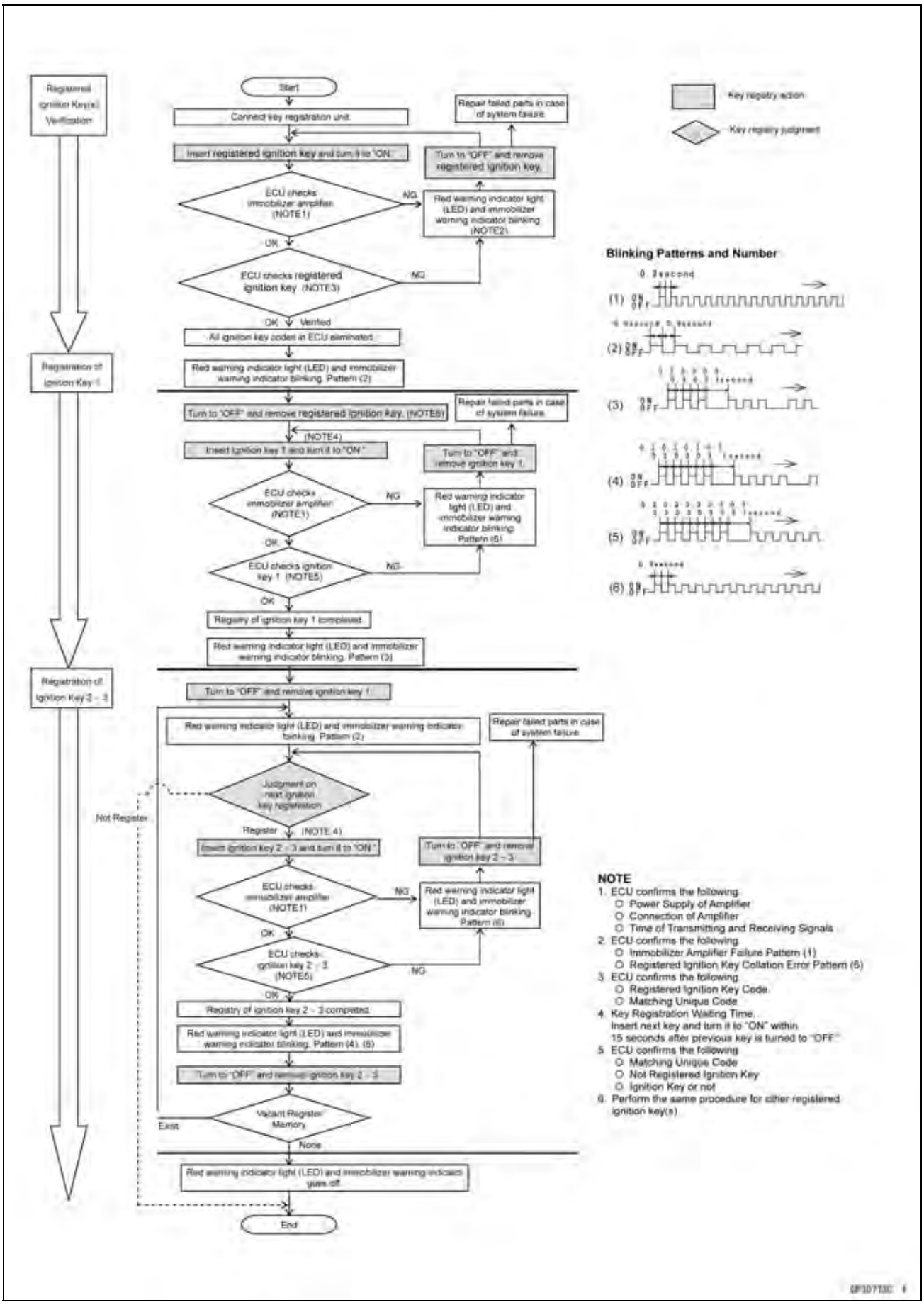

NOTE

1. ECU confirms the following.
   - ○ Power Supply of Amplifier
   - ○ Connection of Amplifier
   - ○ Time of Transmitting and Receiving Signals
2. ECU confirms the following.
   - ○ Immobilizer Amplifier Failure Pattern (1)
   - ○ Registered Ignition Key Collation Error Pattern (6)
3. ECU confirms the following.
   - ○ Registered Ignition Key Code.
   - ○ Matching Unique Code
4. Key Registration Waiting Time.
   Insert next key and turn it to "ON" within 15 seconds after previous key is turned to "OFF."
5. ECU confirms the following.
   - ○ Matching Unique Code
   - ○ Not Registered Ignition Key
   - ○ Ignition Key or not
6. Perform the same procedure for other registered ignition key(s).

Immobilizer System (Equipped Models)

Case 2: When the ignition switch is faulty and to be replaced.

- Prepare a new ignition switch [A] and two new ignition keys [B].

○These parts are available as a set. Prepare the current registered ignition key [C].

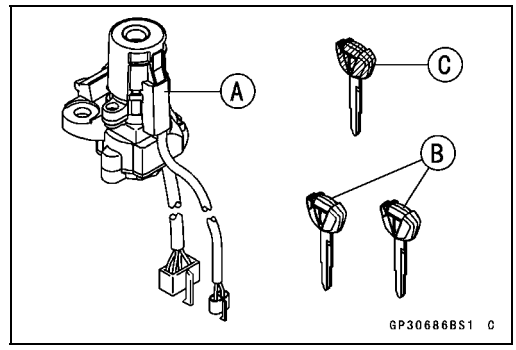

- Remove:
  Ignition Switch (see Immobilizer System Parts Replacement)
  Front Seat (see Front Seat Removal in the Frame chapter)
- Remove the immobilizer/Kawasaki diagnostic system connector cap [A].

- Connect the key registration unit [A] and key registration adapter [B] as shown.

Special Tools - Key Registration Unit: 57001-1582
Key Registration Adapter: 57001-1746

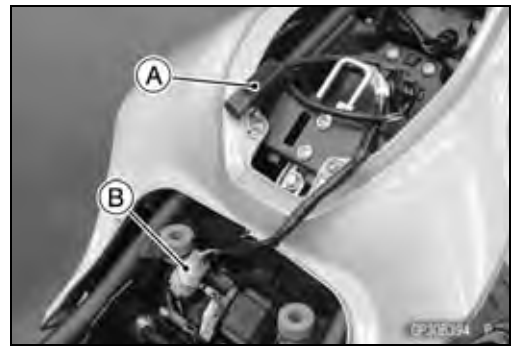

- Connect:
  New Ignition Switch Lead Connector [A]
  Current Immobilizer Antenna Lead Connector [B]

NOTE

○*Keep the ignition switches more than 15 cm (5.9 in.).*

New Ignition Switch [C]
Current Ignition Switch [D]

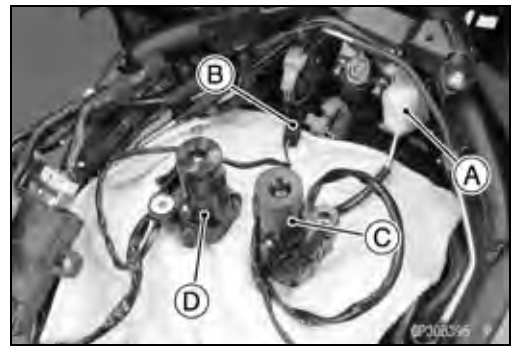

- Insert the current registered ignition key [A] at the current ignition switch [B].
- Insert the new ignition key 1 [C] to the new ignition switch [D] and turn it to “ON.”

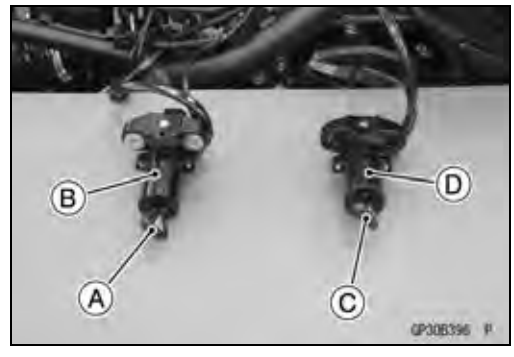

Immobilizer System (Equipped Models)

○The red warning indicator light (LED) and immobilizer warning indicator [A] blink 1 time and stops for 1 second and repeats this cycle.

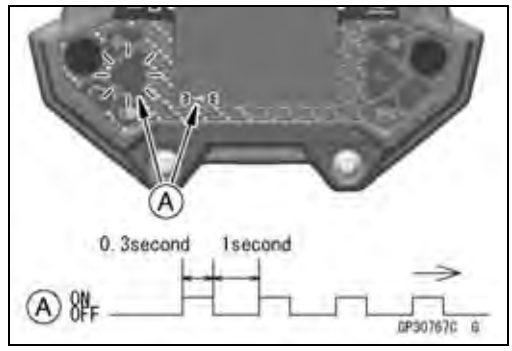

Not Verified

○The red warning indicator light (LED) and immobilizer warning indicator [A] blink to display the collation error.
Immobilizer Amplifier Failure

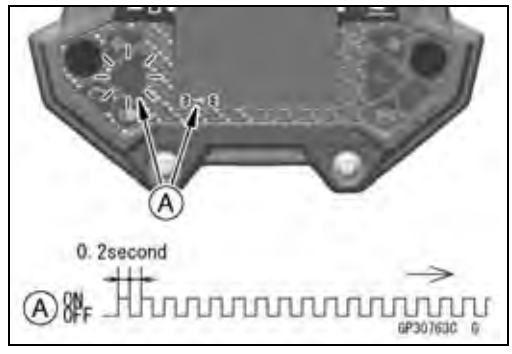

Registered Ignition Key Collation Error

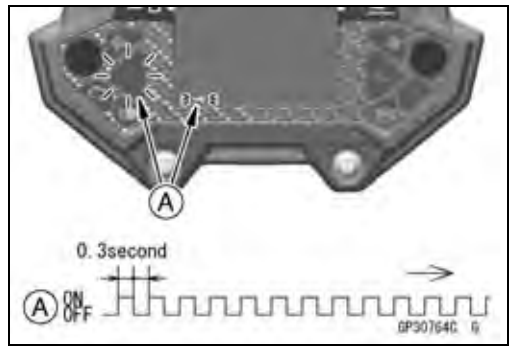

● Turn to “OFF” and remove the new ignition key 1.

NOTE

○*Insert the next key and turn it to “ON” within 15 seconds after previous key is turned to “OFF” and removed otherwise registration mode will be ended and the red warning indicator light (LED) and immobilizer warning indicator stops blinking.*

Verified

○The red warning indicator light (LED) and immobilizer warning indicator [A] blink to display the ECU is in the registration mode (go to the next step).

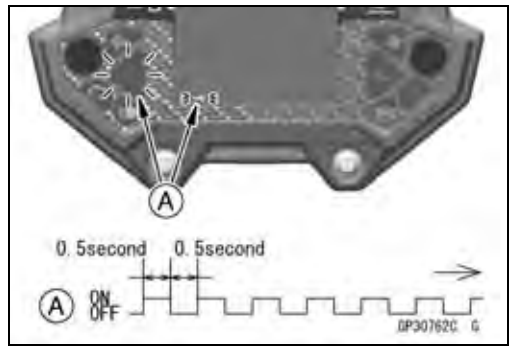

Immobilizer System (Equipped Models)

- Disconnect the immobilizer antenna lead connector, then connect the antenna lead connector of the new ignition switch.
- Insert the ignition key 1 [A] again into the new ignition switch and turn it to “ON.”

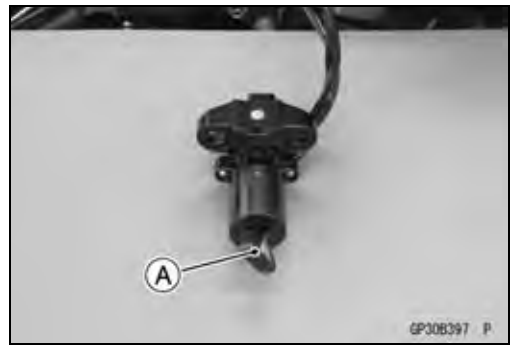

NOTE

- *Insert the next key and turn it to “ON” within 15 seconds after previous key is turned to “OFF” and removed otherwise registration mode will be ended and the red warning indicator light (LED) and immobilizer warning indicator stops blinking.*
- *To return to the registration mode start the registered ignition key verification procedure. This applies to all ignition key registration.*
- *Keep other ignition keys away from the ignition switch.*

- If there is any problem in the registration, the red warning indicator light (LED) and immobilizer warning indicator [A] blink to display the collation error.

Immobilizer Amplifier Failure

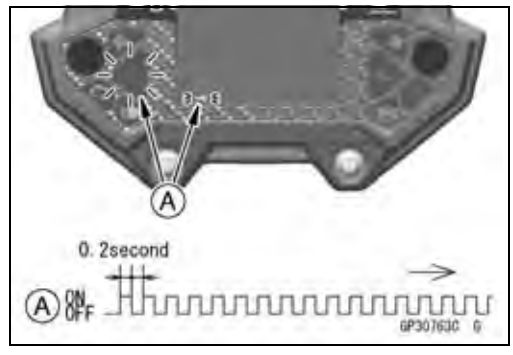

When Registered Ignition Key is Inserted.

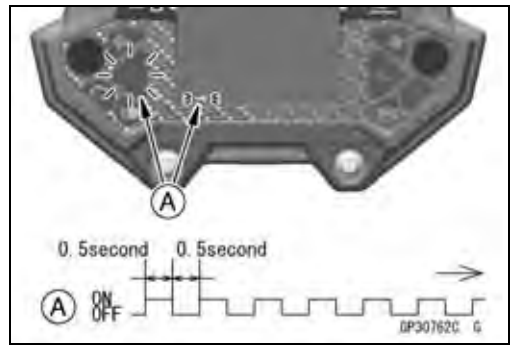

Ignition Key Collation Error

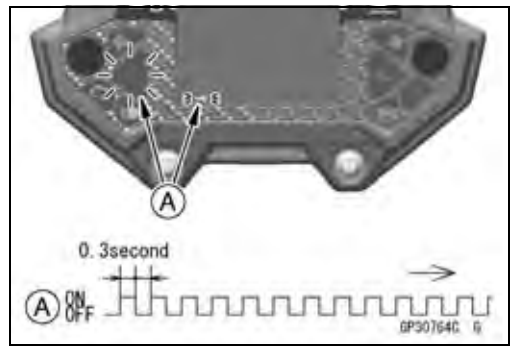

Immobilizer System (Equipped Models)

● The ignition key 1 is successfully registered in the ECU.
○The red warning indicator light (LED) and immobilizer warning indicator [A] blink 2 times and stops for 1 second and then repeats this cycle to indicate successful registering of ignition key 1.

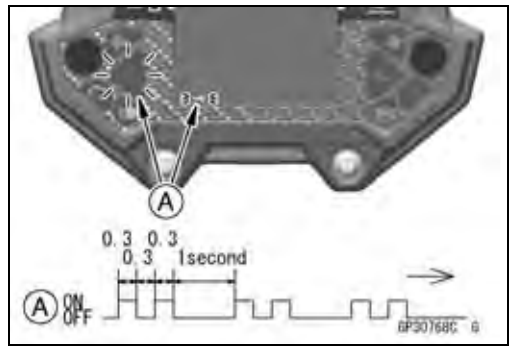

● Turn to “OFF” and remove ignition key 1.
○The red warning indicator light (LED) and immobilizer warning indicator [A] blink to display the registration mode.

NOTE

○*Turn to “OFF” the ignition switch and wait for the period more than 15 seconds. The registration mode automatically ends and red warning indicator light (LED) and immobilizer warning indicator go off.*
○*This procedure has , registered the registered ignition key and one ignition key.*
○*Continue the procedure to program the second and later keys.*

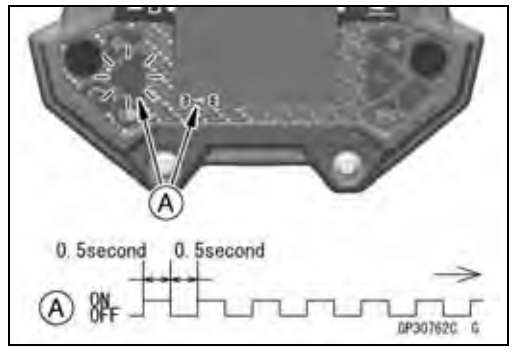

● Insert the ignition key 2 to the ignition switch and turn it to “ON.”

○If there is any problem in the registration, the red warning indicator light (LED) and immobilizer warning indicator [A] blink to display the collation error.
Immobilizer Amplifier Failure

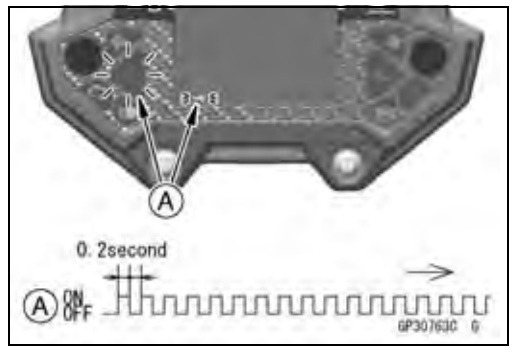

When Registered Ignition Key is Inserted.

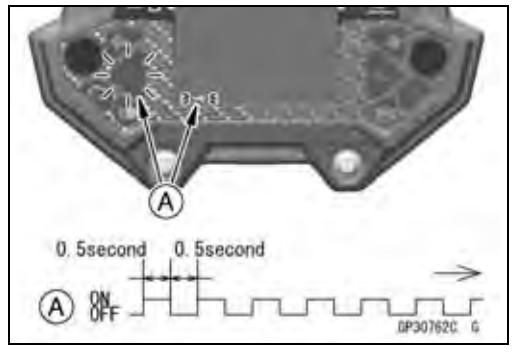

Immobilizer System (Equipped Models)

Ignition Key Collation Error

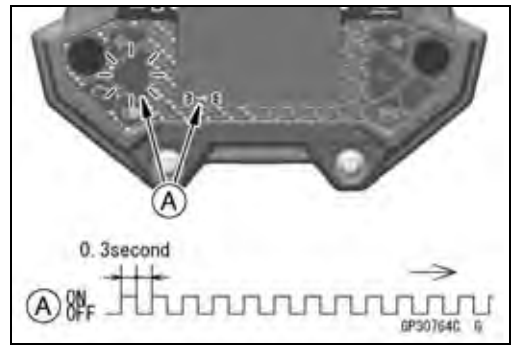

- The ignition key 2 is successfully registered in the ECU.

○The red warning indicator light (LED) and immobilizer warning indicator [A] blink 3 times and stops for 1 second and then repeat this cycle to indicate successful programming of ignition key 2.

- Turn to “OFF” the ignition switch and wait for period more than 15 seconds.
- The registration mode automatically ends.

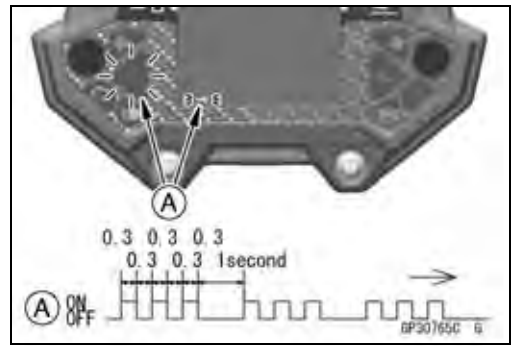

- The red warning indicator light (LED) [A] goes off.

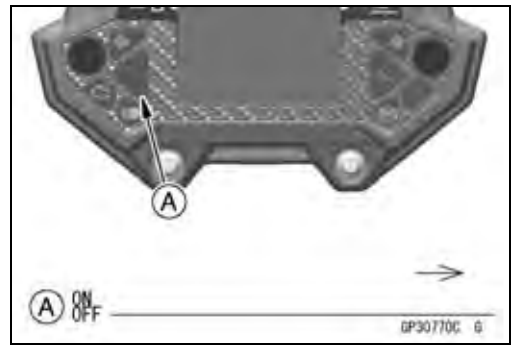

- Remove the key registration unit, key registration adapter and install the immobilizer/Kawasaki diagnostic system connector cap.

NOTE

○*Turn the ignition switch to “ON” with the registered ignition key.*

○*Check that the engine can be started using all registered ignition keys.*

- Install the new ignition switch (see Immobilizer System Parts Replacement).

Case 3: When the ECU is faulty and has to be replaced.

- Prepare a new ECU [A] and current registered ignition key(s) [B].

NOTE

○*The key registration unit is not required.*

○*After replacing the ECU, be sure to register the 2 ignition keys. If the 2 keys are not registered, the engine can not be started.*

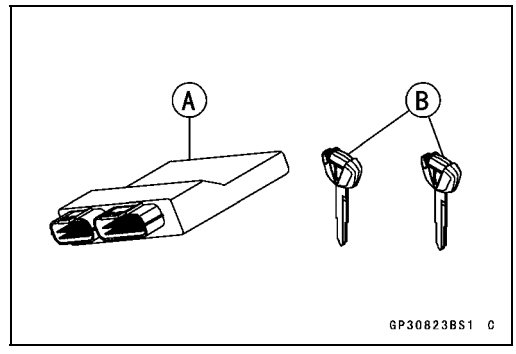

Immobilizer System (Equipped Models)

● Replace the ECU [A] (see ECU Removal/Installation in the Fuel System (DFI) chapter).

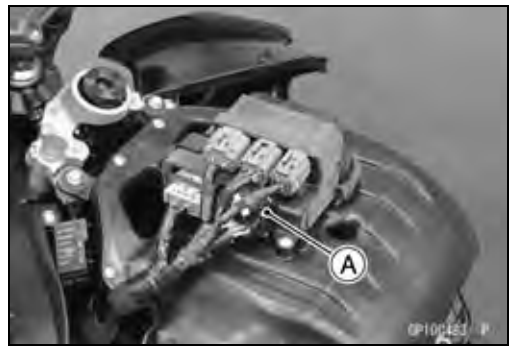

● Insert the current registered ignition key into the ignition switch and turn it to “ON.”

○If there is any problem in the registration, the red warning indicator light (LED) and immobilizer warning indicator [A] blink to display the collation error.

Immobilizer Amplifier Failure

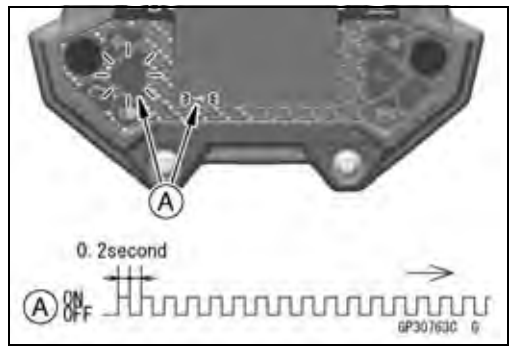

Registered Ignition Key Collation Error

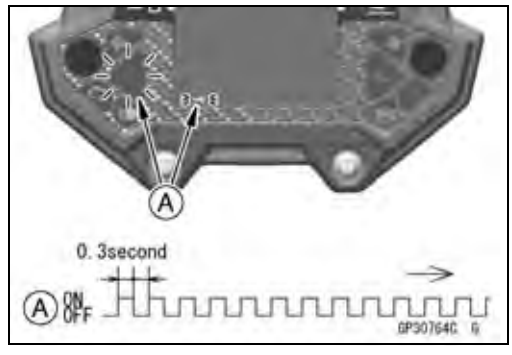

● The registered ignition key is registered in the ECU.

○The red warning indicator light (LED) and immobilizer warning indicator [A] blink 1 time and stops for 1 second and the repeats this cycle to indicate successful registration of the registered ignition key.

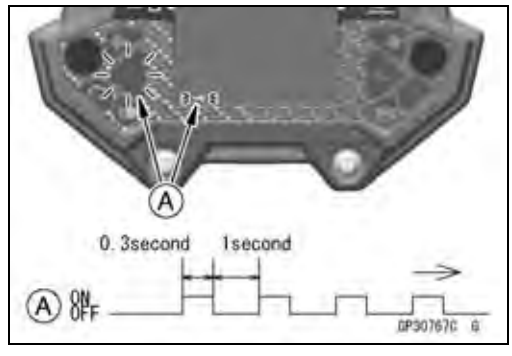

Immobilizer System (Equipped Models)

● Turn to “OFF” the registered ignition key and remove it.

○The red warning indicator light (LED) and immobilizer warning indicator [A] blink to display the registration mode.

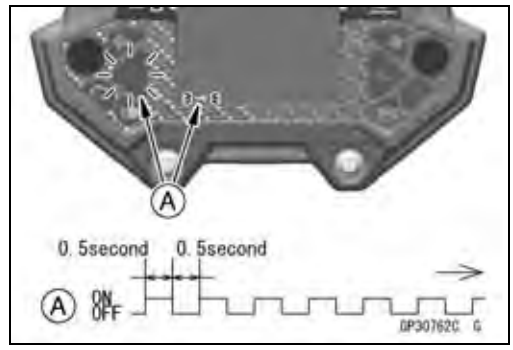

NOTE

○*Insert next key and turn it to “ON” within 15 seconds after previous key is turned to “OFF” and removed otherwise registration mode will be ended and the red warning indicator light (LED) and immobilizer warning indicator go off.*

○*To return to the registration mode start the registered ignition key verification procedure. This applies to all ignition key registration.*

● Insert the other remaining registered ignition key to the ignition switch and turn it to “ON.”

NOTE

○*Keep the other ignition keys away from the immobilizer antenna.*

○If there is any problem in the registration, the red warning indicator light (LED) and immobilizer warning indicator [A] blink to display the collation error.

Immobilizer Amplifier Failure

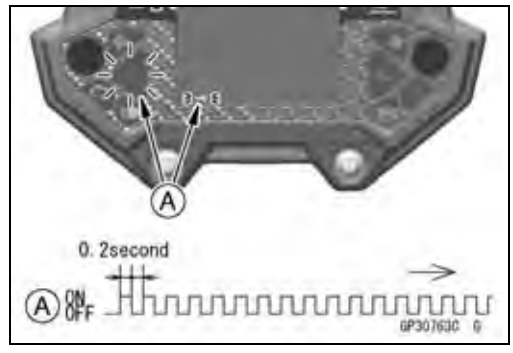

When Registered Ignition Key is Inserted.

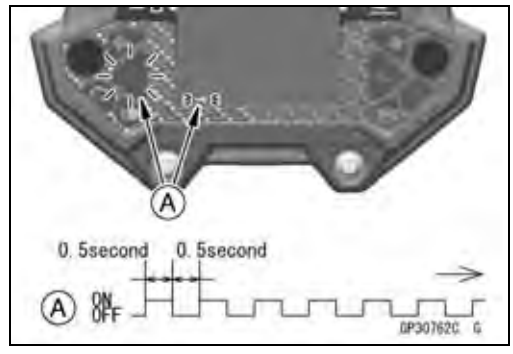

Ignition Key Collation Error

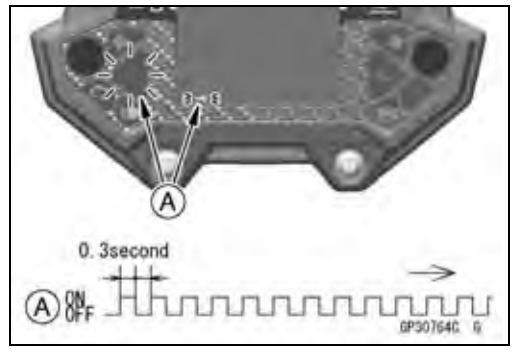

Immobilizer System (Equipped Models)

● The other remaining ignition key is registered in the ECU.
○The red warning indicator light (LED) and immobilizer warning indicator [A] blink 2 times and stops for 1 second and then repeats this cycle to indicate successful registration of ignition key.

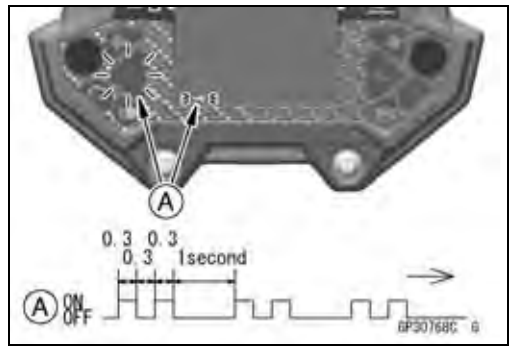

● Turn to “OFF” the ignition switch and wait for period more than 15 seconds.
● The registration mode automatically ends.

● The red warning indicator light (LED) [A] goes off.

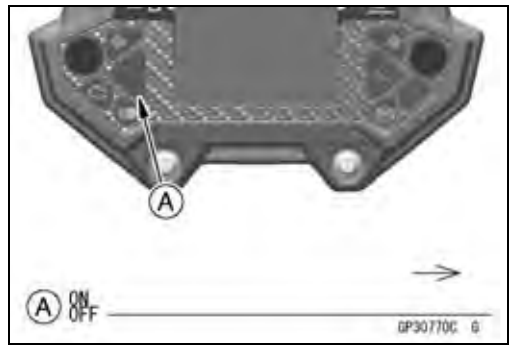

NOTE

○*Turn the ignition switch to “ON” with the registered ignition key.*
○*Check that the engine can be started using all registered ignition keys.*

Case 4: When all registered ignition keys are faulty or lost.

The all registered ignition keys replacement is considered very rare case. However if it is required, the following is necessary.

NOTE

○*The ECU must be replaced with a new one because the registered ignition key code that is registered in the current ECU can not be rewritten.*

● Prepare a new ECU [A] and 2 new ignition keys [B].

NOTE

○*The key registration unit is not required.*
○*After replacing the ECU, be sure to register the 2 ignition keys. If the 2 keys are not registered, the engine can not be started.*

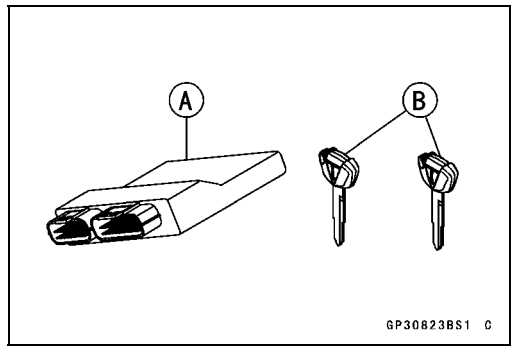

● Insert the first ignition key into the ignition switch and turn it to “ON.”

Immobilizer System (Equipped Models)

○If there is any problem in the registration, the red warning indicator light (LED) and immobilizer warning indicator [A] blink to display the collation error.

Immobilizer Amplifier Failure

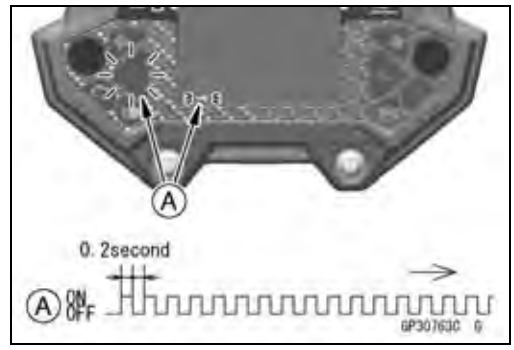

Ignition Key Collation Error

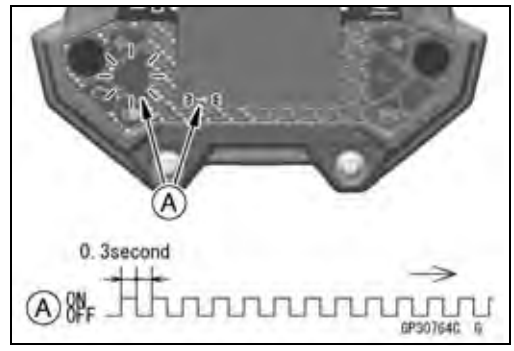

● The first ignition key is registered in the ECU.

○The red warning indicator light (LED) and immobilizer warning indicator [A] blink 1 time and stops for 1 second and the repeats this cycle to indicate successful registration of the first ignition key.

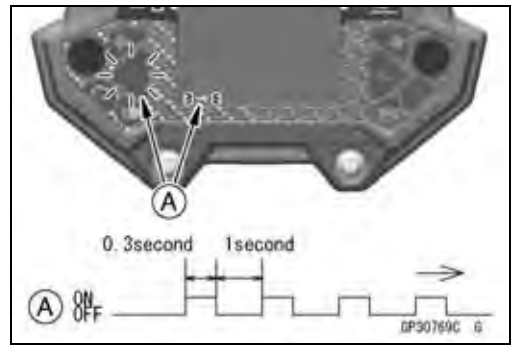

● Turn to “OFF” the first ignition key and remove it.

● The red warning indicator light (LED) and immobilizer warning indicator [A] blink to display the registration mode.

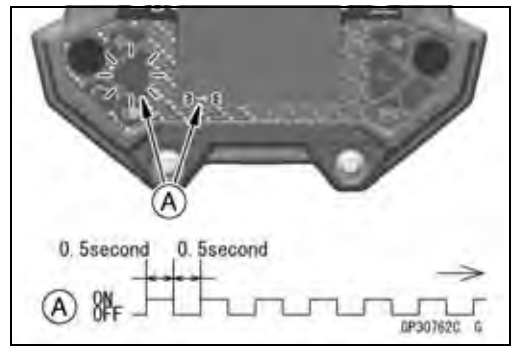

NOTE

○*Insert next key and turn it to “ON” within 15 seconds after previous key is turned to “OFF” and removed otherwise registration mode will be ended and the red warning indicator light (LED) and immobilizer warning indicator go off.*

○*To return to the registration mode start the registered ignition key verification procedure. This applies to all ignition key registration.*

● Insert the second ignition key to the ignition switch and turn it to “ON.”

NOTE

○*Keep the other ignition keys away from the immobilizer antenna.*

Immobilizer System (Equipped Models)

○If there is any problem in the registration, the red warning indicator light (LED) and immobilizer warning indicator [A] blink to display the collation error.

Immobilizer Amplifier Failure

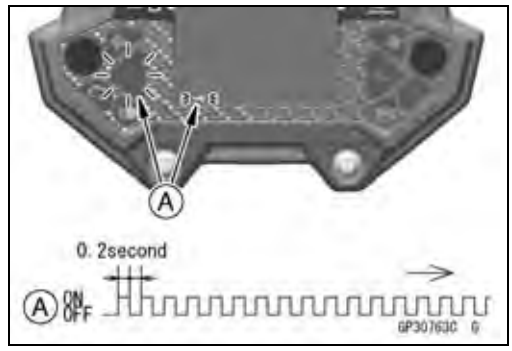

When Registered Ignition Key is Inserted

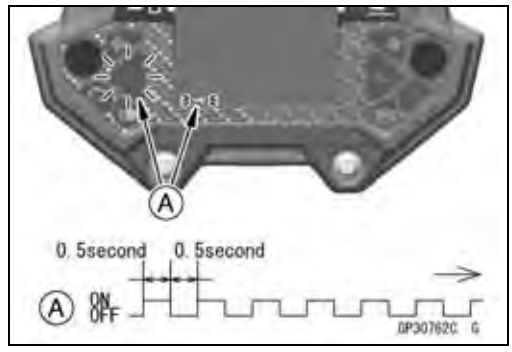

Ignition Key Collation Error

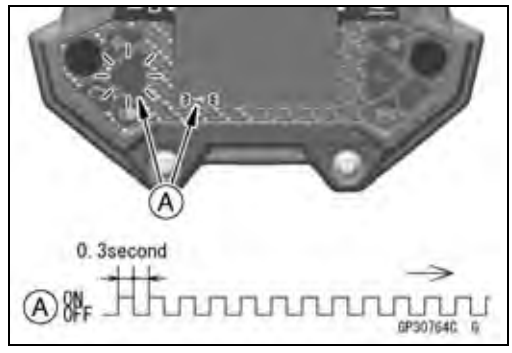

- The second ignition key is registered in the ECU.

○The red warning indicator light (LED) and immobilizer warning indicator [A] blink 2 times and stops for 1 second and then repeats this cycle to indicate successful registration of second ignition key.

- Turn to “OFF” the ignition switch and wait for period more than 15 seconds.
- The registration mode automatically ends.

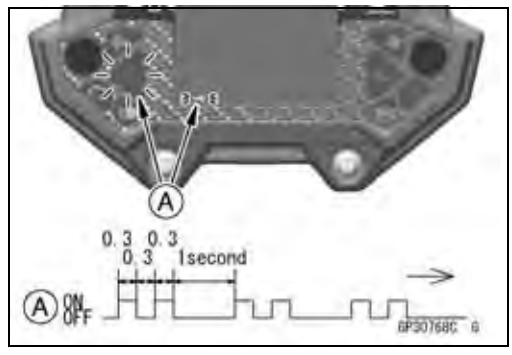

- The red warning indicator light (LED) [A] goes off.

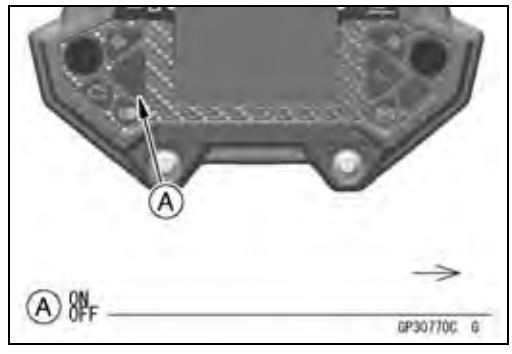

Immobilizer System (Equipped Models)

NOTE

- *Turn the ignition switch to “ON” with the registered ignition key.*
- *Check that the engine can be started using all registered ignition keys.*

Immobilizer System (Equipped Models)

All Keys Initial Registration Flow Chart

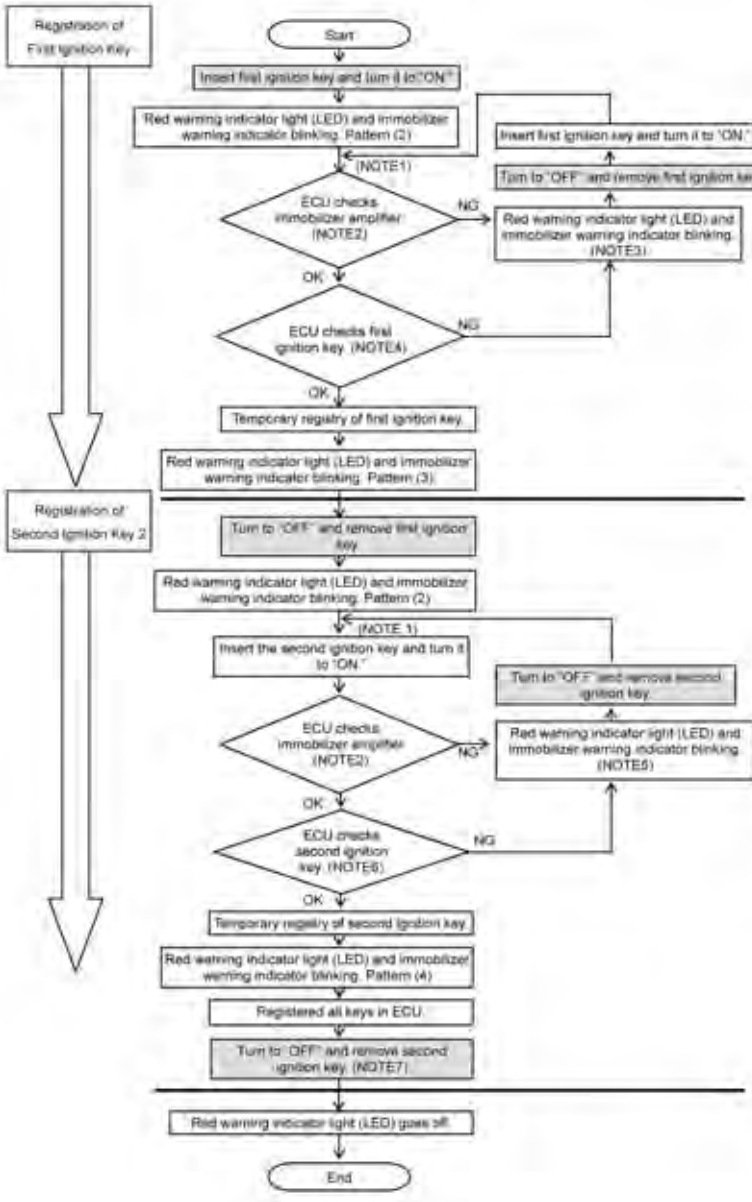

NOTE

1. Key Substitute Time
   Insert next key and turn it to "ON" within 15 seconds after previous key is turned to "OFF."
2. ECU confirms the following.
   - O Power Supply of Amplifier
   - O Connection of Amplifier
   - O Time of Transmitting and Receiving Messages
3. ECU confirms the following.
   - O Immobilizer Amplifier Failure Pattern (1)
   - O Ignition Key Collation Error Pattern (5)
4. ECU confirms the following.
   - O Ignition Key or Not
   - O Match the Unique Code
5. ECU confirms the following.
   - O Immobilizer Amplifier Failure Pattern (1)
   - O Second Ignition Key Collation Error Pattern (5)
   - O Registered Ignition Key is Inserted Pattern (2)
6. ECU confirms the following.
   - O Ignition Key or Not
   - O Match the Unique Code
   - O Not Registered Ignition Key
7. When the ECU-registered key is turned to "OFF", ECU keeps the power on for two seconds. And then, in two seconds after the key is turned to "OFF", ECU turns the power off.

Immobilizer System (Equipped Models)

Immobilizer System Parts Replacement

Ignition Switch Replacement

- Remove:
  Air Cleaner Housing (see Air Cleaner Housing Removal in the Fuel System (DFI) chapter)
  Ignition Switch Cover (see Ignition Switch Cover Removal in the Frame chapter)
- Slide the dust cover [A].
- Disconnect the lead connectors [B].

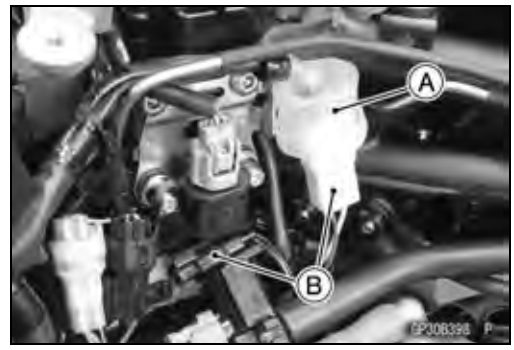

- Free the ignition switch lead from the clamps [A] behind the vehicle-down sensor.

- Using a punch [A], mark the punch mark at the center of broken Torx bolt head.

NOTE

○*Make the punch mark at center of the bolt head surely.*

- Extend the punch mark with the ϕ2 mm drill [A].
- In addition, extend the punch mark with the ϕ3.5 mm drill.
- Lastly, shave off the Torx bolt head with the ϕ6.5 mm drill.

NOTE

○*Be sure to do not damage the lead wires and component parts with a drill.*

- Remove:
  Ignition Switch Bolts [A], Washers and Dampers
  Bracket [B]

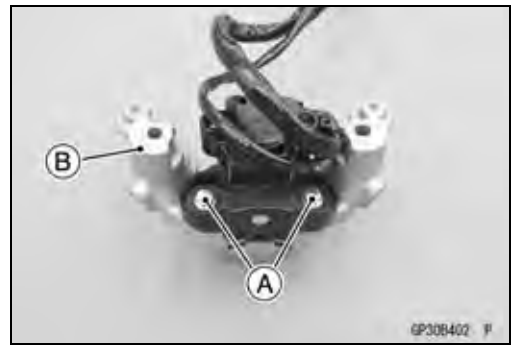

Immobilizer System (Equipped Models)

- Replace the ignition switch [A] with a new one.
- Install:
  Cover [B]
  Bracket [C]
  Collars [D]
  Dampers [E]
  Washers [F]
  Bolts [G]
- Tighten the bolt to install the bracket to the ignition switch.

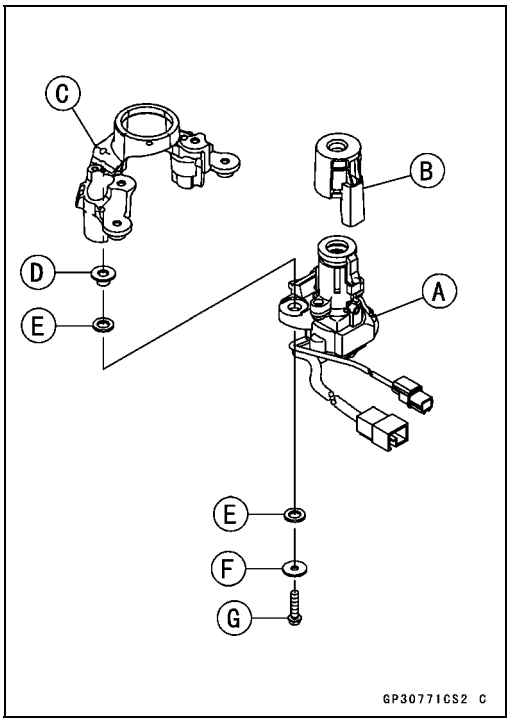

- Tighten a new Torx bolt [A] until the bolt head [B] is broken [C].
- Run the leads correctly (see Cable, Wire, and Hose Routing section in the Appendix chapter).
- Register the more than two ignition keys (see Key Registration).

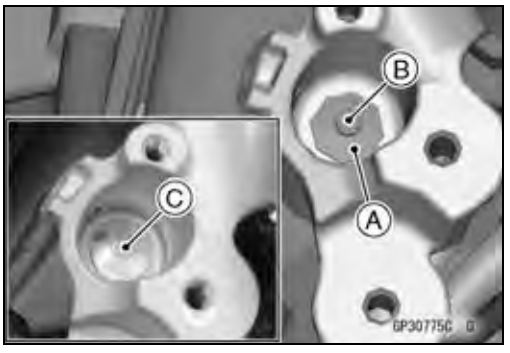

Immobilizer Amplifier Replacement

- Remove:
  Air Cleaner Housing (see Air Cleaner Housing Removal in the Fuel System (DFI) chapter)
  Bolts [A]
- Pull the vehicle-down sensor bracket to the rearward.

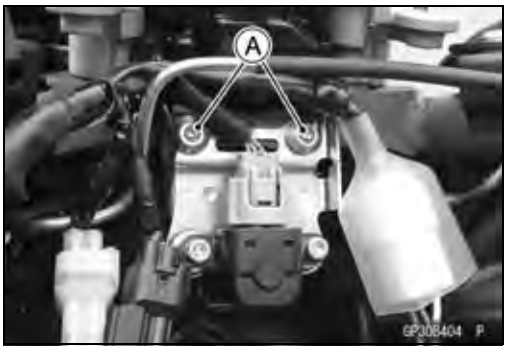

- Pull the immobilizer amplifier [A] to remove it from the bracket.
- Disconnect the connector [B].
- Installation is the reverse of removal.

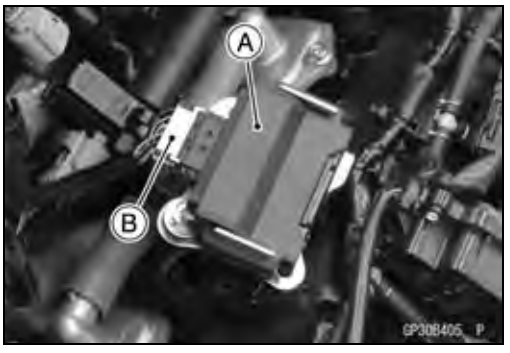

ECU Replacement

- Refer to the ECU Removal/Installation in the Fuel System (DFI) chapter.

Immobilizer System (Equipped Models)

Registered Immobilizer Relational Parts Replacement Chart

		Failed or Lost Part			
		Ignition Keys	Ignition Switch	Amplifier	ECU
*	Ignition Key	●	○		
	Ignition Switch		●		
	Amplifier			●	
	ECU	○			●

*	Replacement Part
●	Main Replacement Part
○	Additional Replacement Part

Immobilizer System Inspection

- Refer to the Immobilizer Amplifier and Blank Key Detection section in the Fuel System (DFI) chapter.

Immobilizer System (Equipped Models)

Immobilizer System Circuit

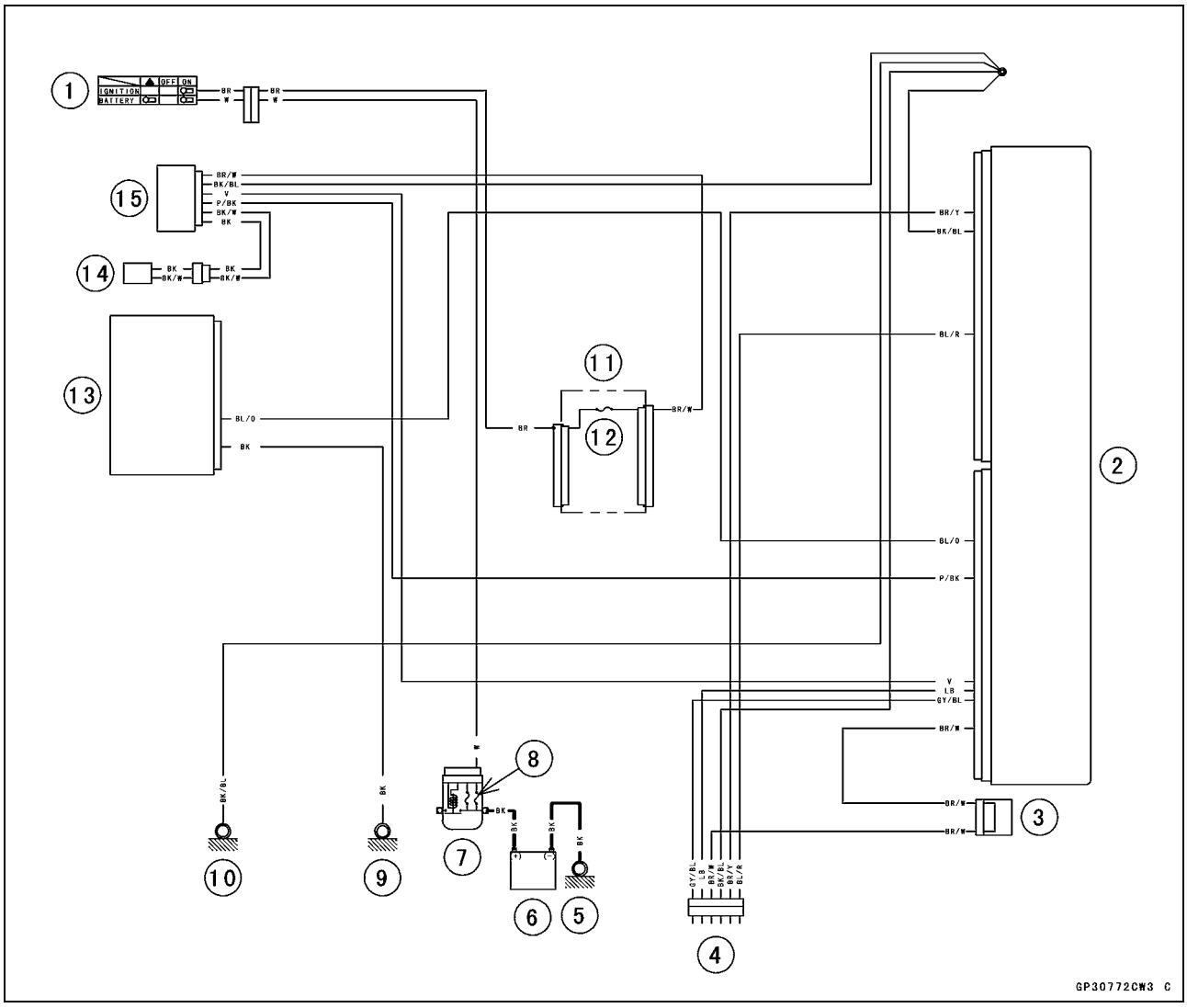

1. Ignition Switch
2. ECU
3. Joint Connector B
4. Immobilizer/Kawasaki Diagnostic System Connector
5. Engine Ground
6. Battery 12 V 8 Ah
7. Starter Relay
8. Main Fuse 30 A
9. Frame Ground (10)
10. Frame Ground (7)
11. Fuse Box (1)
12. Ignition Fuse 15 A
13. Meter Unit
14. Immobilizer Antenna
15. Immobilizer Amplifier

Switches and Sensors

Brake Light Timing Inspection

● Refer to the Brake Light Switch Operation Inspection in the Periodic Maintenance chapter.

Brake Light Timing Adjustment

● Refer to the Brake Light Switch Operation Inspection in the Periodic Maintenance chapter.

Switch Inspection

● Using a tester, check to see that only the connections shown in the table have continuity (about zero ohms).

○For the switch housings and the ignition switch, refer to the tables in the Wiring Diagram.

★If the switch has an open or short, repair it or replace it with a new one.

Rear Brake Light Switch Connections

Rear Brake Light Switch Connections		
Color	BR	BL
When brake pedal is pushed down	○——○	
When brake pedal is released		

Side Stand Switch Connections

Side Stand Switch Connections		
Color	BK	G
When side stand is down		
When side stand is up	○——○	

Oil Pressure Switch Connections*

Oil Pressure Switch Connections *		
Color	SW. Terminal	Ground
When engine is stopped	○——○	
When engine is running		

*: Engine lubrication system is in good condition.

Switches and Sensors

Water Temperature Sensor Inspection

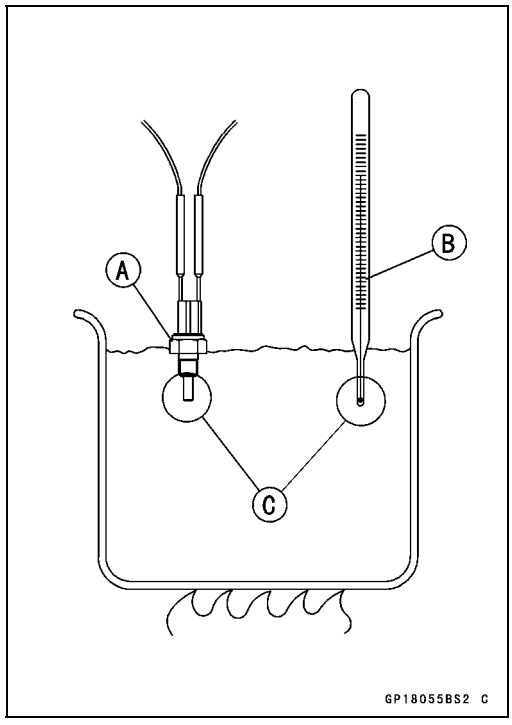

- Remove the water temperature sensor (see Water Temperature Sensor Removal/Installation in the Fuel System (DFI) chapter).
- Suspend the sensor [A] in a container of coolant so that the threaded portion is submerged.
- Suspend an accurate thermometer [B] with temperature sensing portions [C] located in almost the same depth.

NOTE

○*The sensor and thermometer must not touch the container side or bottom.*

- Place the container over a source of heat and gradually raise the temperature of the coolant while stirring the coolant gently.
- Using a digital meter, measure the internal resistance of the sensor.

★If the digital meter does not show the specified values, replace the sensor.

Water Temperature Sensor Resistance

Temperature	Resistance (kΩ)
–20°C (–4°F)	*18.80 ±2.37
0°C (32°F)	*(about 6.544)
40°C (104°F)	1.136 ±0.095
100°C (212°F)	0.1553 ±0.0070

*: Reference Information

Oxygen Sensor Removal

NOTICE
Never drop the sensor especially on a hard surface. Such a shock to the sensor can damage it.

NOTICE
Do not pull strongly, twist, or bend the oxygen sensor lead. This may cause the wiring open.

- Remove:
  Fuel Tank (see Fuel Tank Removal in the Fuel System (DFI) chapter)
  Right Lower Fairing (see Lower Fairing Removal in the Frame chapter)
- Disconnect the oxygen sensor lead connector [A].

Switches and Sensors

● Clear the oxygen sensor lead from the clamps [A].

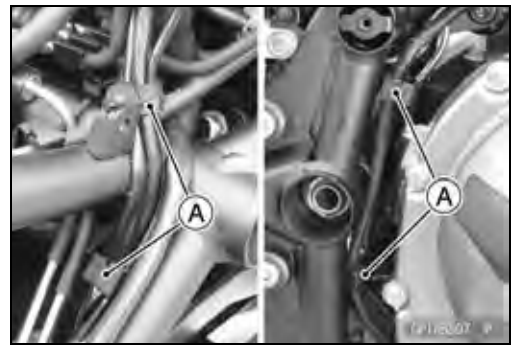

● Clear the oxygen sensor lead from the clamp [A].
● Remove the oxygen sensor [B].

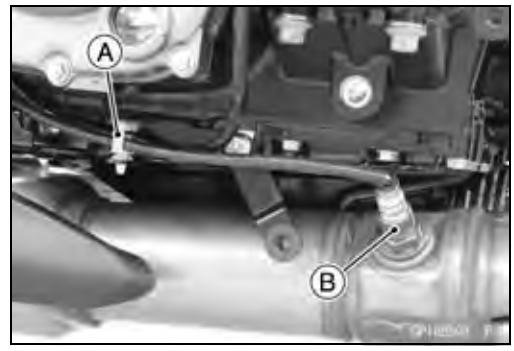

Oxygen Sensor Installation

NOTICE

Never drop the oxygen sensor [A] especially on a hard surface. Such a shock to the unit can damage it. Do not touch the sensing part [B] and filter holes [C] of the sensor to prevent oil contact. Oil contamination from hands can reduce sensor performance.

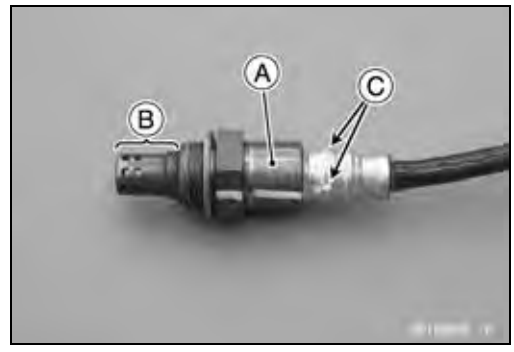

● Tighten:

Torque - Oxygen Sensor: 44 N·m (4.5 kgf·m, 32 ft·lb)

● Run the oxygen sensor lead correctly (see Cable, Wire, and Hose Routing section in the Appendix chapter).
● Install the removed parts (see appropriate chapters).

Oxygen Sensor Inspection

● Refer to the Oxygen Sensor Inspection in the Fuel System (DFI) chapter.

Fuel Level Sensor Inspection

● Remove:
Fuel Pump (see Fuel Pump Removal in the Fuel System (DFI) chapter)
● Check that the float moves up and down smoothly without binding. It should go down under its own weight.
★ If the float does not move smoothly, replace the fuel pump.
Float in Full Position [A]
Float in Empty Position [B]

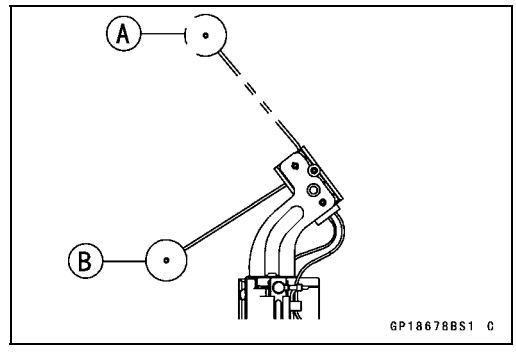

Switches and Sensors

● Using a tester [A], measure the resistance across the terminals in the fuel level sensor lead connector [B].

Special Tool - Needle Adapter Set: 57001-1457

★If the tester readings are not as specified, or leading does not change smoothly according as the float moves up and down, replace the fuel pump.

Fuel Level Sensor Resistance

Connections: R/BK lead ←→ BK/W lead

Standard: Full position: 9.6 ~ 12.4 Ω

Empty position: 222 ~ 228 Ω

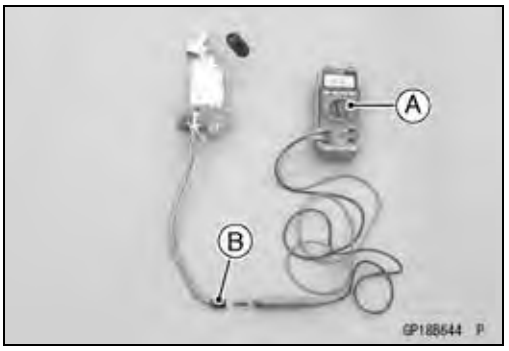

Gear Position Sensor Removal

● Drain:
Engine Oil (see Engine Oil Change in the Periodic Maintenance chapter)

● Disconnect the connector [A] to remove the gear position sensor.

● Remove the gear position sensor bolt [B] and pull out the gear position sensor [C].

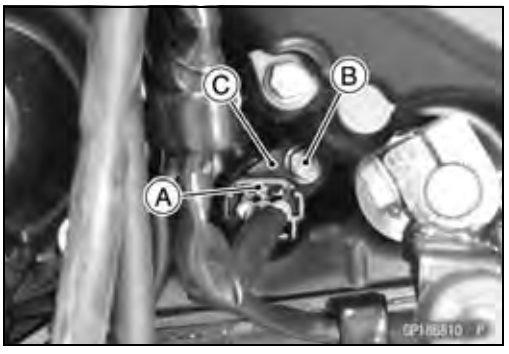

Gear Position Sensor Installation

★If replace the gear position sensor, select new sensor which has same mark with the current one.

Mark [A]	Parts Number
H	21176-0845
M	21176-0825
L	21176-0846

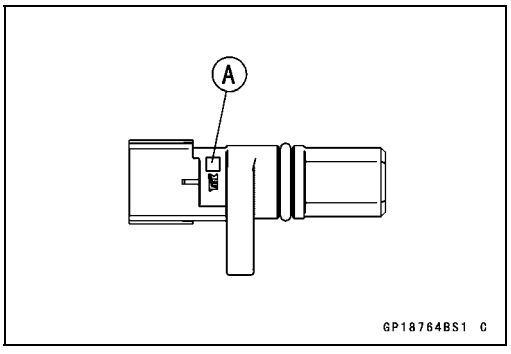

● Replace the O-ring [A] with a new one.

● Apply grease to the O-ring.

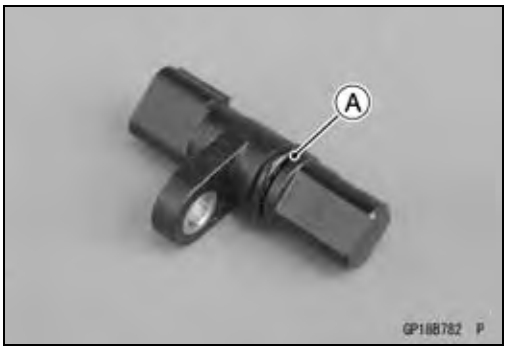

● Apply a non-permanent locking agent to the threads of the gear position sensor bolt [A].

● Install the gear position sensor [B] to the crankcase.

○When installing the sensor which is fastened by bolt, tighten the bolt after placing the sensor on the bottom surface completely.

Torque - Gear Position Sensor Bolt: 10 N·m (1.0 kgf·m, 89 in·lb)

● Connect the connector [C] to the gear position sensor.

● Fill the engine with recommended engine oil (see Engine Oil Change in the Periodic Maintenance chapter).

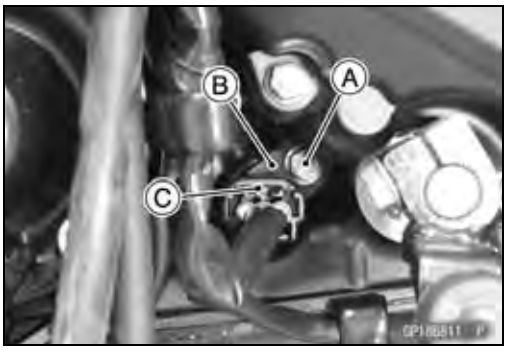

Switches and Sensors

Gear Position Sensor Inspection

- Refer to the Gear Position Sensor Input Voltage Inspection in the Fuel System (DFI) chapter.

Accessory Socket Removal/Installation (Special Edition Models)

- Remove:
  Meter Cover (see Meter Unit Removal)
  Bolt [A]
- Disconnect the connectors [B] and remove the accessory socket [C].

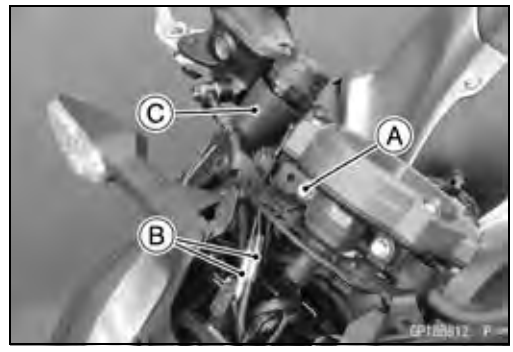

- Remove:
  Screw [A]
  Cover [B]
  Locknut [C]
  Damper [D] and Collar
  Accessory Socket [E] and Cover
  Bracket [F]

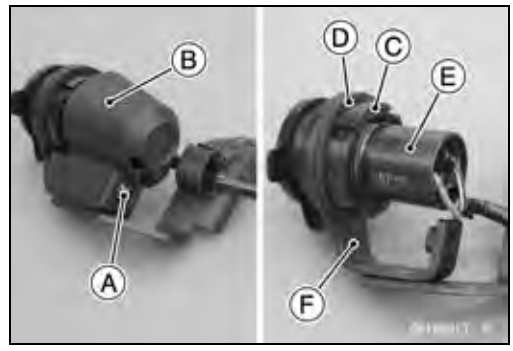

- Installation is the reverse of removal.
- Align the tab [A] on the accessory socket with the cut-out [B] of the cover, damper [C] and bracket [D].
- Tighten the locknut securely.

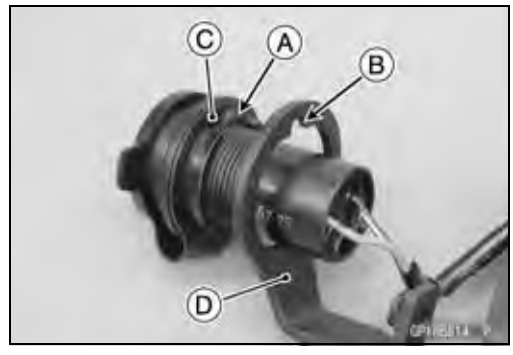

Relay Box

The relay box [A] has relays and diodes. The relays and diodes can not be removed.

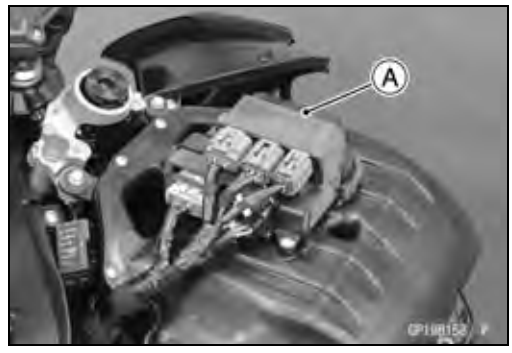

Relay Box Removal/Installation

NOTICE
Never drop the relay box especially on a hard surface. **Such a shock to the relay box can damage it.**

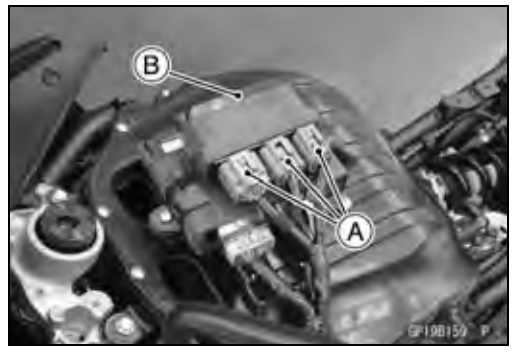

- Remove the fuel tank (see Fuel Tank Removal in the Fuel System (DFI) chapter).
- Disconnect:
  Connectors [A]
- Remove:
  Relay Box [B]
- Installation is the reverse of removal.

Relay Circuit Inspection

- Remove the relay box (see Relay Box Removal).
- Check conductivity of the following numbered terminals by connecting a tester and one 12 V battery to the relay box as shown (see Relay Box Internal Circuit in this section).

★If the tester does not read as specified, replace the relay box.

Relay Circuit Inspection (with the battery disconnected)

	Tester Connection	Tester Reading (Ω)
Headlight Circuit Relay	1-3	∞
ECU Main Relay	7-6	∞
	4-5	Not ∞*
Fuel Pump Relay	7-8	∞
	9-10	Not ∞*
Starter Circuit Relay	11-16	∞
	11-12	∞
Fan Relay	17-20	∞
	18-19	Not ∞*

*: The actual reading varies with the tester used.

Relay Box

Relay Circuit Inspection (with the battery connected)

	Battery Connection (+) (–)	Tester Connection	Tester Reading (Ω)
Headlight Relay	2-11	1-3	0
ECU Main Relay	4-5	7-6	0
Fuel Pump Relay	9-10	7-8	0
Fan Relay	18-19	17-20	0

	Battery Connection (+) (–)	Tester Connection (+) (–)	Tester Reading (V)
Starter Circuit Relay	16-12	11-12	Battery Voltage

(+): Apply positive lead.
(–): Apply negative lead.

Diode Circuit Inspection

- Remove the relay box (see Relay Box Removal).
- Check conductivity of the following pairs of terminals (see Relay Box Internal Circuit in this section).

Diode Circuit Inspection

Tester Connection	1-11, 2-11, 12-13, 12-15, 12-16, 13-14, 13-15

★The resistance should be low in one direction and more than 10 times as much in the other direction. If any diode shows low or high in both directions, the diode is defective and the relay box must be replaced.

NOTE

○*The actual meter reading varies with the meter or tester used and the individual diodes, but generally speaking, the lower reading should be from zero to one half the scale.*

Relay Box

Relay Box Internal Circuit

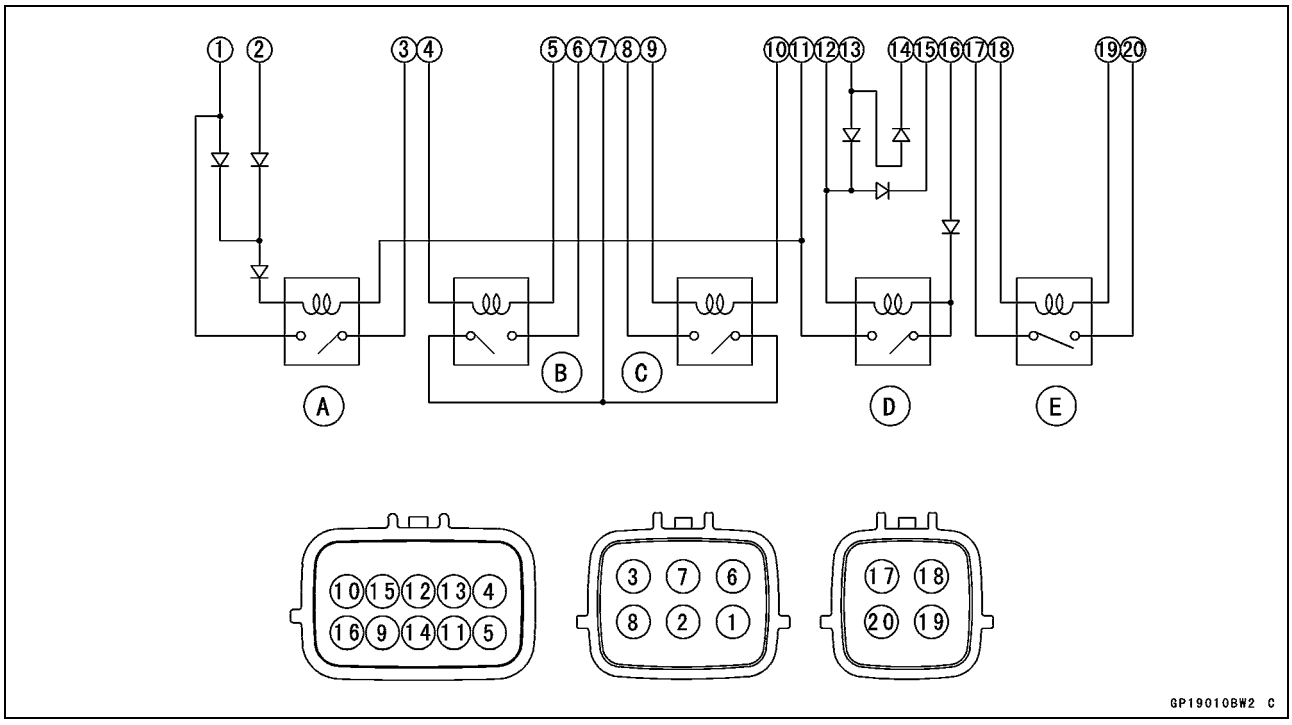

A: Headlight Circuit Relay
B: ECU Main Relay
C: Fuel Pump Relay
D: Starter Circuit Relay
E: Fan Relay

Fuse

30 A Main/15 A ECU Fuse Removal

- Remove:
  Starter Relay Cover (see Starter Relay Inspection)
- Pull out the fuses [A] from the starter relay with needle nose pliers.

Fuse Box Fuse Removal

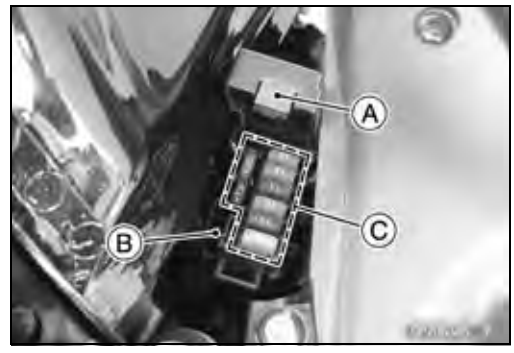

- Remove:
  Fuel Tank Cover (see Fuel Tank Cover Removal in the Frame chapter)
- Unlock the hook [A] to lift up the lid.
  Fuse Box (1) [B]
- Pull the fuses [C] straight out of the fuse box with needle nose pliers.

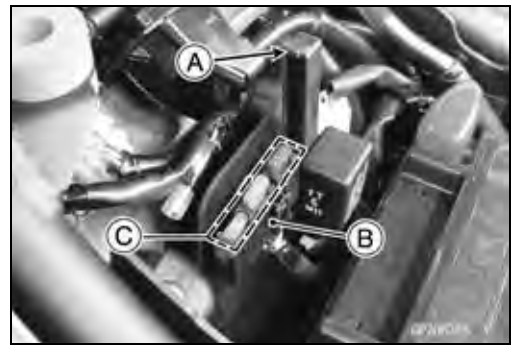

- Remove:
  Front Seat (see Front Seat Removal in the Frame chapter)
- Unlock the hook [A] to lift up the lid.
  Fuse Box (2) [B]
- Pull the fuses [C] straight out of the fuse box with needle nose pliers.

Fuse Installation

★If a fuse fails during operation, inspect the electrical system to determine the cause, and then replace it with a new fuse of proper amperage.

- Install the fuse box fuses on the original position as specified on the lid.

Fuse Inspection

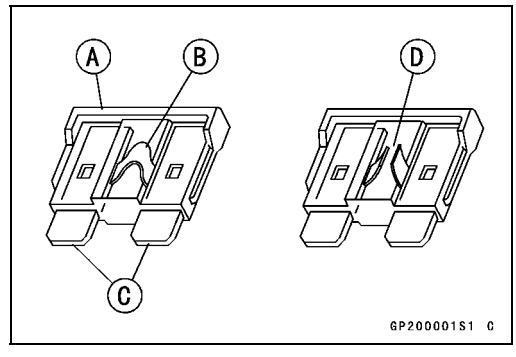

- Remove the fuse (see 30 A Main/15 A ECU/Fuse Box Fuse Removal).
- Inspect the fuse element.

★If it is blown out, replace the fuse. Before replacing a blown fuse, always check the amperage in the affected circuit. If the amperage is equal to or greater than the fuse rating, check the wiring and related components for a short circuit.

Housing [A]
Fuse Element [B]
Terminals [C]
Blown Element [D]

NOTICE

When replacing a fuse, be sure the new fuse matches the specified fuse rating for that circuit. Installation of a fuse with a higher rating may cause damage to wiring and components.

Appendix

Table of Contents

Cable, Wire, and Hose Routing 17-2
Troubleshooting Guide 17-74

Cable, Wire, and Hose Routing

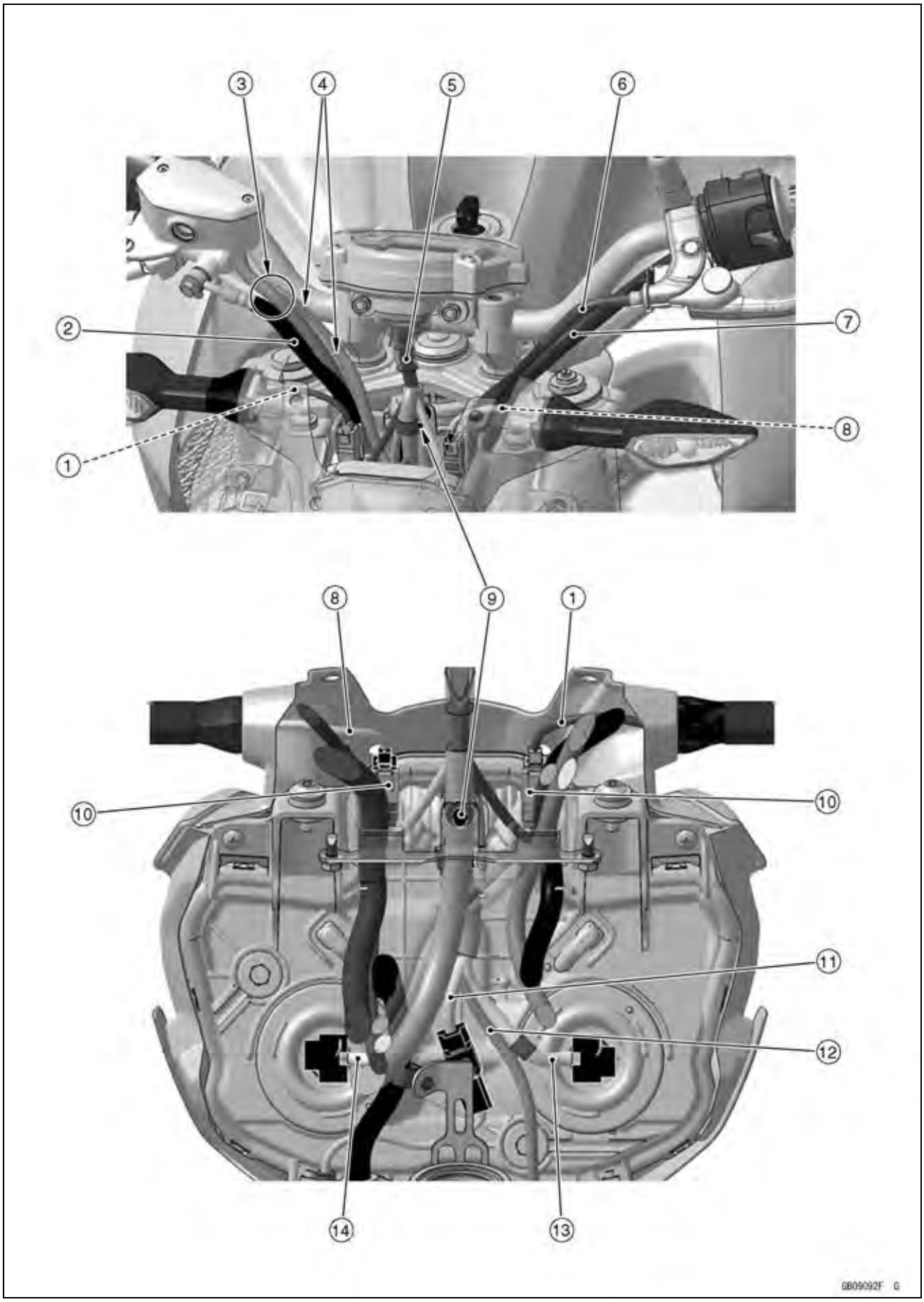

Cable, Wire, and Hose Routing

1. Front Right Turn Signal Light Lead
2. Front Brake Hose
3. Run the right switch housing lead above the throttle cables.
4. Throttle Cables
5. Meter Lead
6. Clutch Cable
7. Left Switch Housing Lead
8. Front Left Turn Signal Light Lead
9. Clamp (Hold the main harness to the meter bracket.)
10. Install the front turn signal light lead connectors to the headlight bracket.
11. Front Wheel Rotation Sensor Lead (ABS Equipped Models)
12. Horn Lead
13. Headlight Lead (Low Beam) (with Green Tape)
14. Headlight Lead (High Beam)

Cable, Wire, and Hose Routing

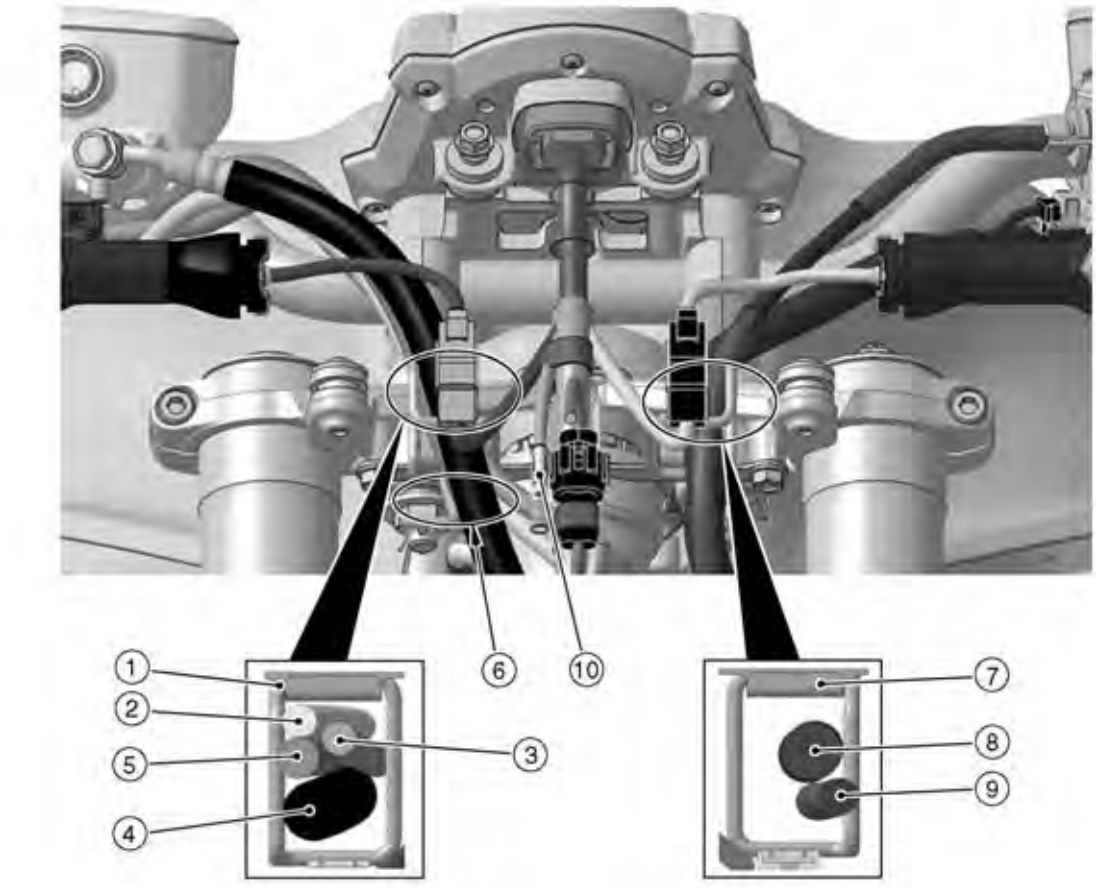

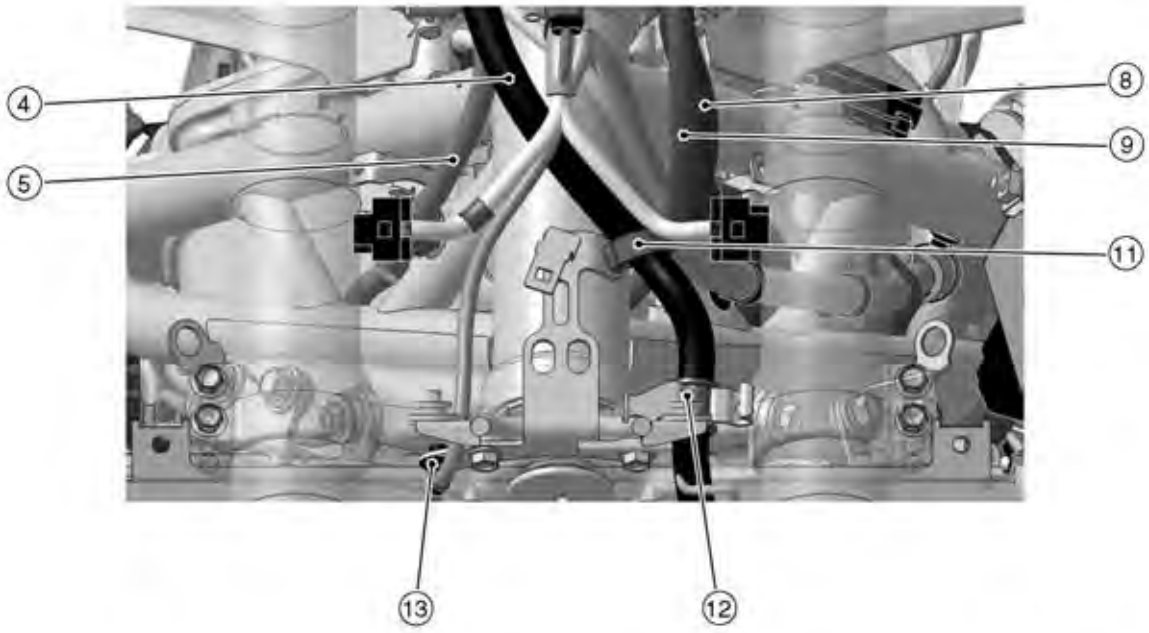

GB09093F G

Cable, Wire, and Hose Routing

1. Run the throttle cable (accelerator), throttle cable (decelerator), right switch housing lead and front brake hose through the clamp.
2. Throttle Cable (Accelerator)
3. Throttle Cable (Decelerator)
4. Front Brake Hose
5. Right Switch Housing Lead
6. Run the right switch housing lead and front brake hose through the inside of the clamp.
7. Run the left switch housing lead and clutch cable through the clamp.
8. Left Switch Housing Lead
9. Clutch Cable
10. Accessory Socket
11. Clamp (Hold the front brake hose.)
12. Bracket (Hold the front brake hose.)
13. Clamp (Hold the horn lead, and install it to the headlight bracket.)

Cable, Wire, and Hose Routing

ABS Equipped Models

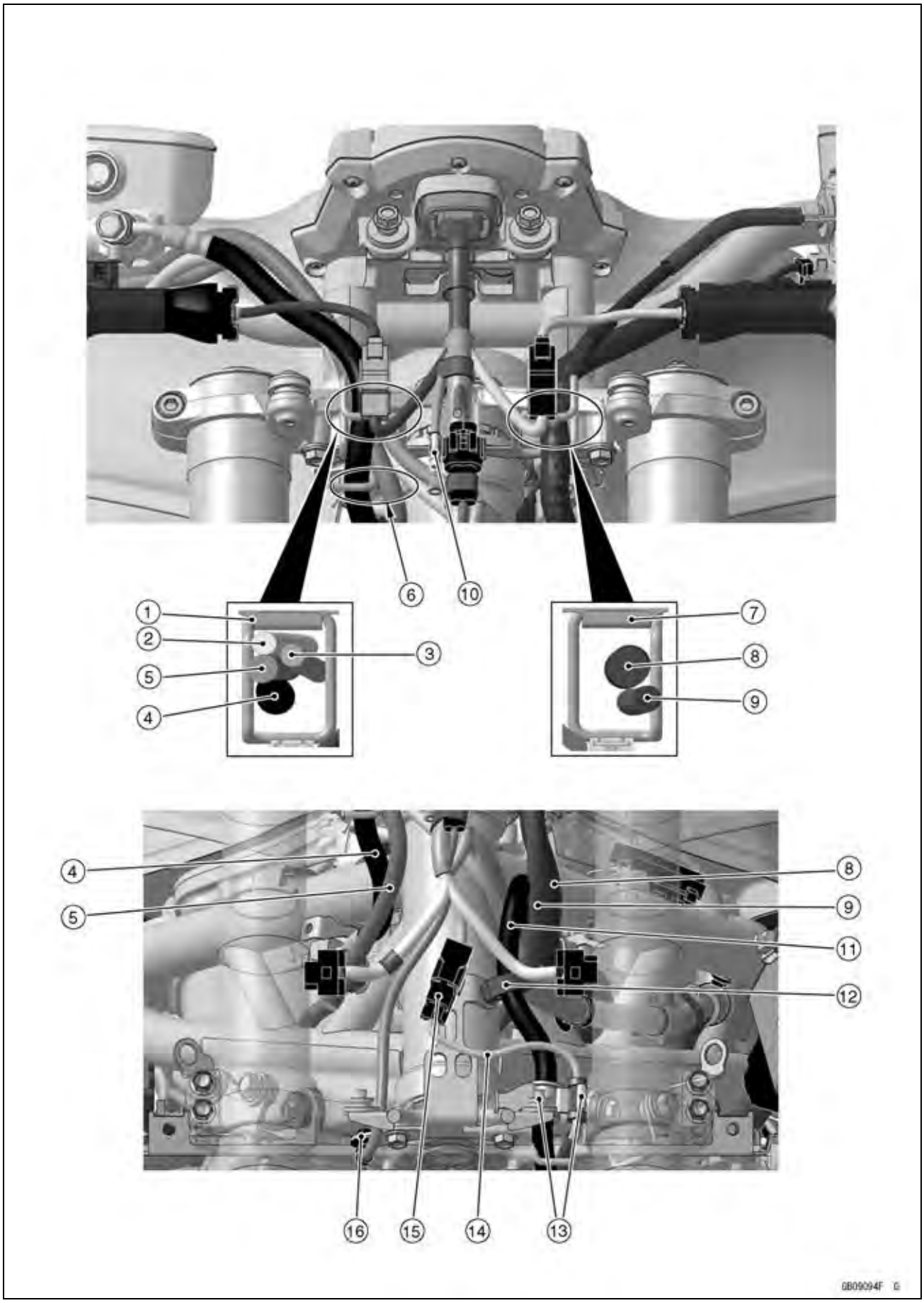

Cable, Wire, and Hose Routing

1. Run the throttle cable (accelerator), throttle cable (decelerator), right switch housing lead and front brake hose (to front master cylinder) through the clamp.
2. Throttle Cable (Accelerator)
3. Throttle Cable (Decelerator)
4. Front Brake Hose (to Front Master Cylinder)
5. Right Switch Housing Lead
6. Run the right switch housing lead inside of the clamp.
7. Run the left switch housing lead and clutch cable through the clamp.
8. Left Switch Housing Lead
9. Clutch Cable
10. Accessory Socket
11. Front Brake Hose (to Front Brake Caliper)
12. Clamp (Hold the front brake hose.)
13. Bracket (Hold the front brake hose and front wheel rotation sensor lead.)
14. Front Wheel Rotation Sensor Lead
15. Install the front wheel rotation sensor lead connector to the bracket.
16. Clamp (Hold the horn lead, and install it to the headlight bracket.)

Cable, Wire, and Hose Routing

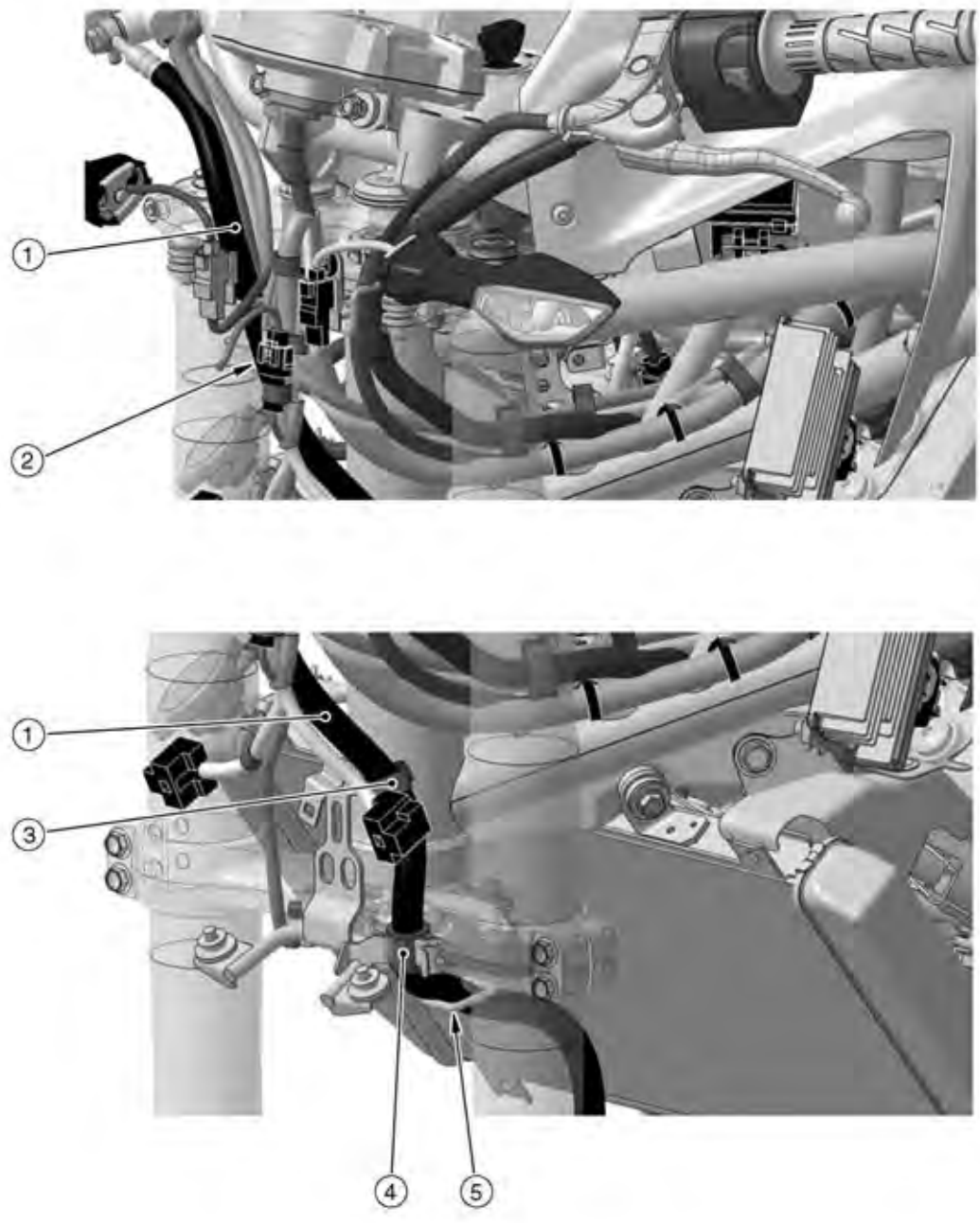

1. Front Brake Hose
2. Run the front brake hose to front side of the throttle cables and main harness.
3. Clamp (Hold the front brake hose.)
4. Bracket (Hold the front brake hose.)
5. Run the front brake hose through the clamp.

Cable, Wire, and Hose Routing

ABS Equipped Models

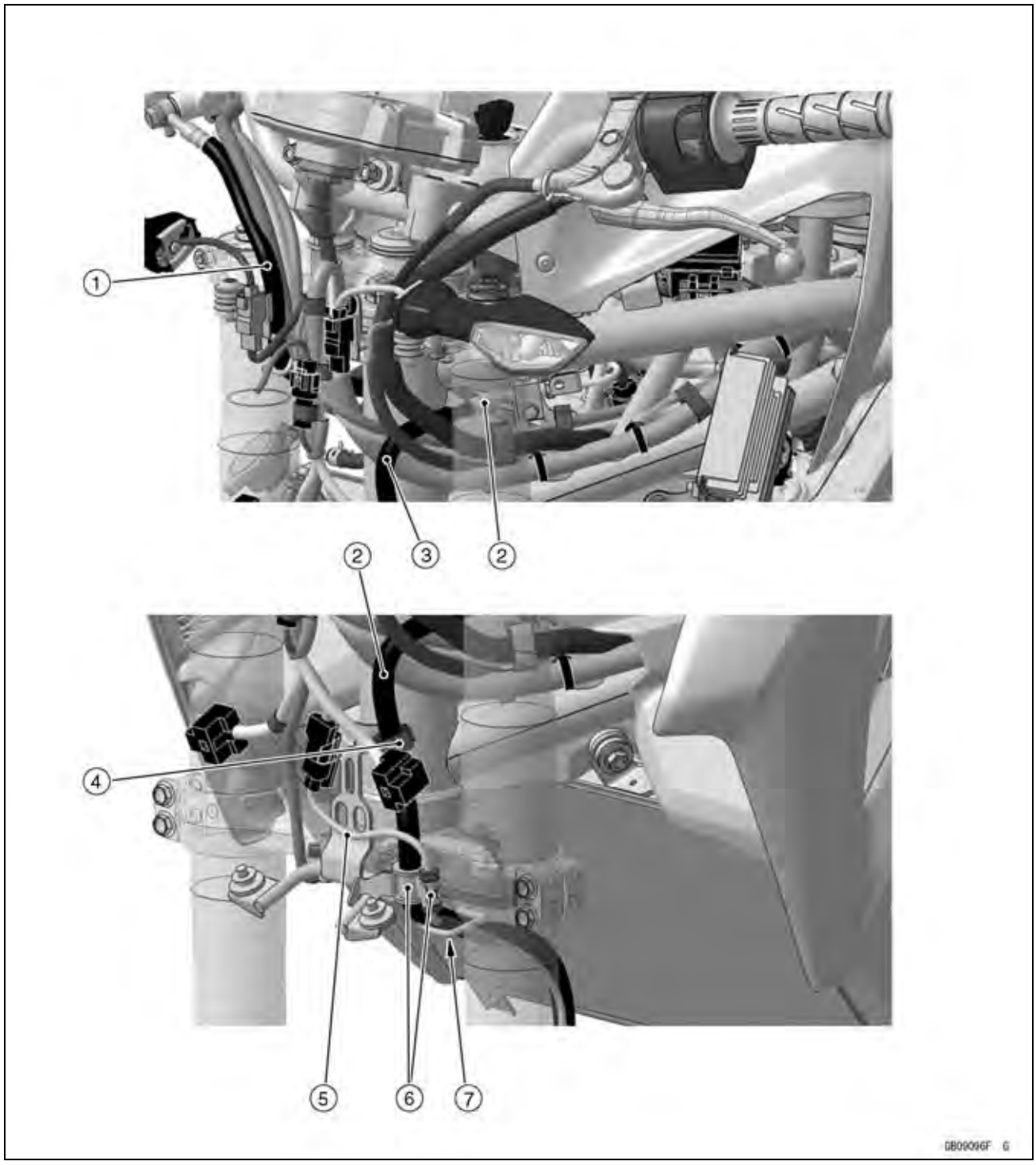

1. Front Brake Hose (to Front Master Cylinder)
2. Front Brake Hose (to Front Brake Caliper)
3. Run the front brake hose (to front brake caliper) to the inside of the left switch housing lead and clutch cable. Run it to the outside of the throttle cables and main harness.
4. Clamp (Hold the front brake hose.)
5. Front Wheel Rotation Sensor Lead
6. Bracket (Hold the front brake hose and front wheel rotation sensor lead.)
7. Run the front brake hose and front wheel rotation sensor lead through the clamp.

Cable, Wire, and Hose Routing

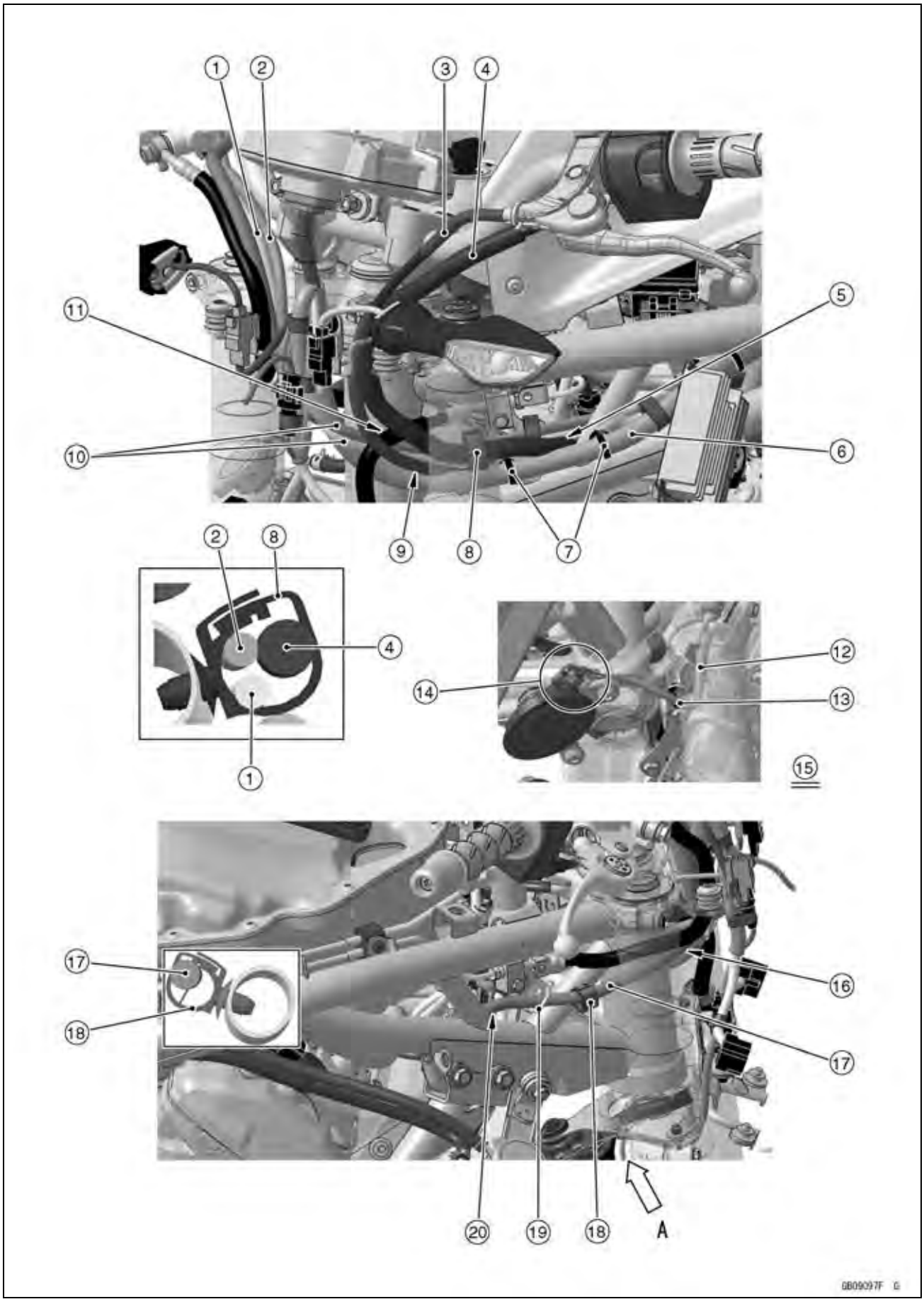

Cable, Wire, and Hose Routing

1. Throttle Cable (Accelerator)
2. Throttle Cable (Decelerator)
3. Clutch Cable
4. Left Switch Housing Lead
5. Run the left switch housing lead between the throttle cables and main harness.
6. Main Harness
7. Clamps (Hold the main harness, and install them to the frame.)
8. Clamp (Hold the left switch housing lead and throttle cables.)
9. Run the clutch cable between the throttle cables and main harness.
10. Run the throttle cables outside the main harness. Run the throttle cables inside of the front brake hose (to front brake caliper, ABS equipped models), left switch housing lead and clutch cable.
11. Run the front brake hose (to front brake caliper, ABS equipped models) to the inside of the left switch housing lead and clutch cable.
12. Horn Lead
13. Clamp (Hold the horn lead, and install it to the headlight bracket.)
14. Install the horn connectors to the horn as shown.
15. Viewed from A
16. Run the right switch housing lead to the inside of the front brake hose (to front master cylinder, ABS equipped models).
17. Right Switch Housing Lead
18. Clamp (Hold the right switch housing lead, and run it through the clamp as shown.)
19. Run the right switch housing lead through the clamp.
20. Run the right switch housing lead inside of the frame.

Cable, Wire, and Hose Routing

Special Edition Models

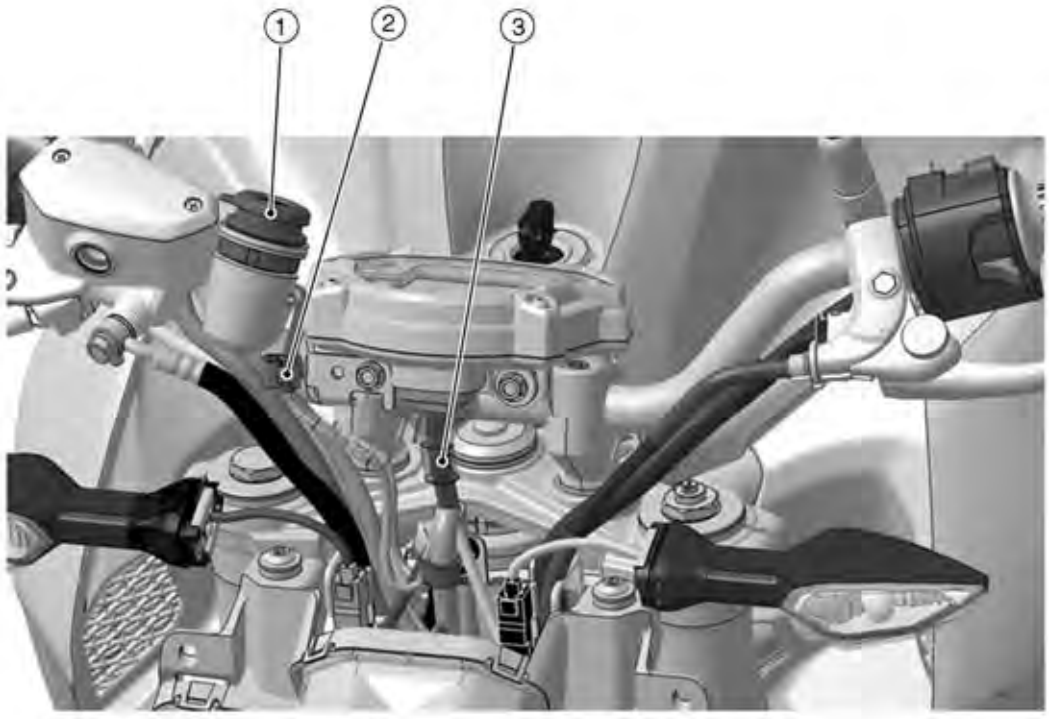

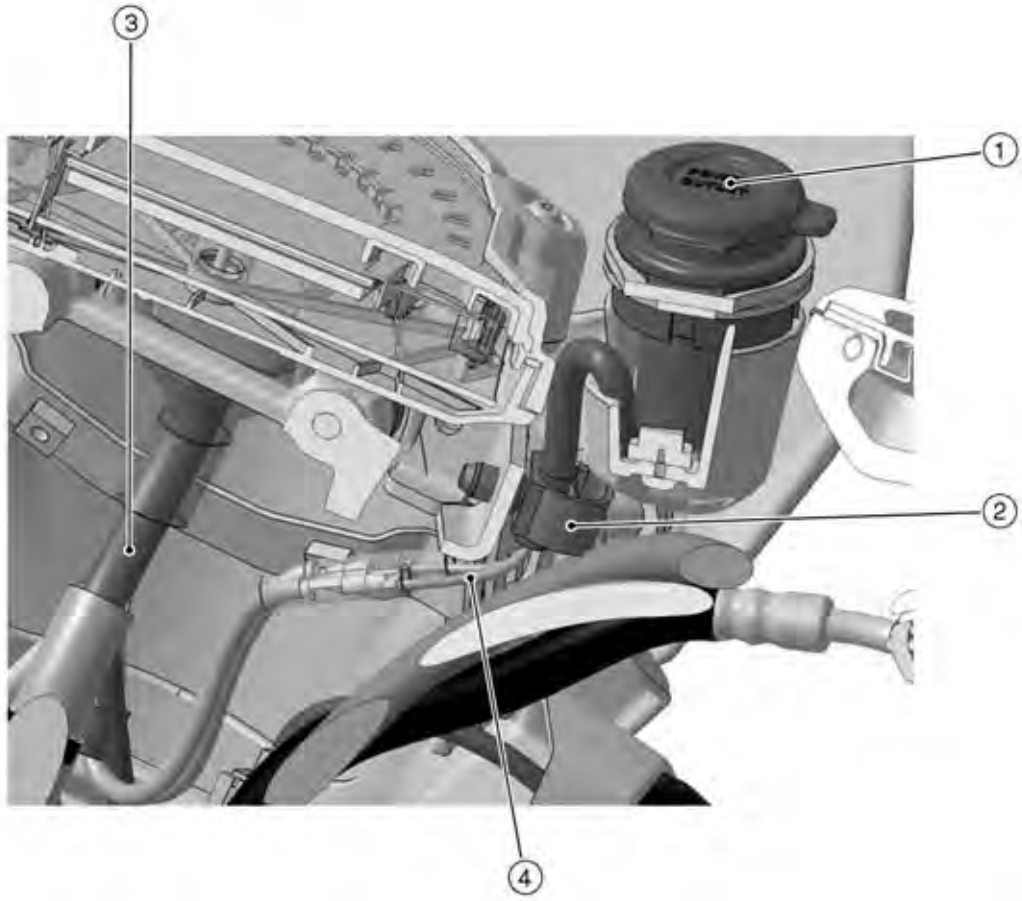

GB09098F G

Cable, Wire, and Hose Routing

1. Accessory Socket
2. Clamp (Hold the accessory socket lead.)
3. Meter Lead
4. Accessory Socket Lead

Cable, Wire, and Hose Routing

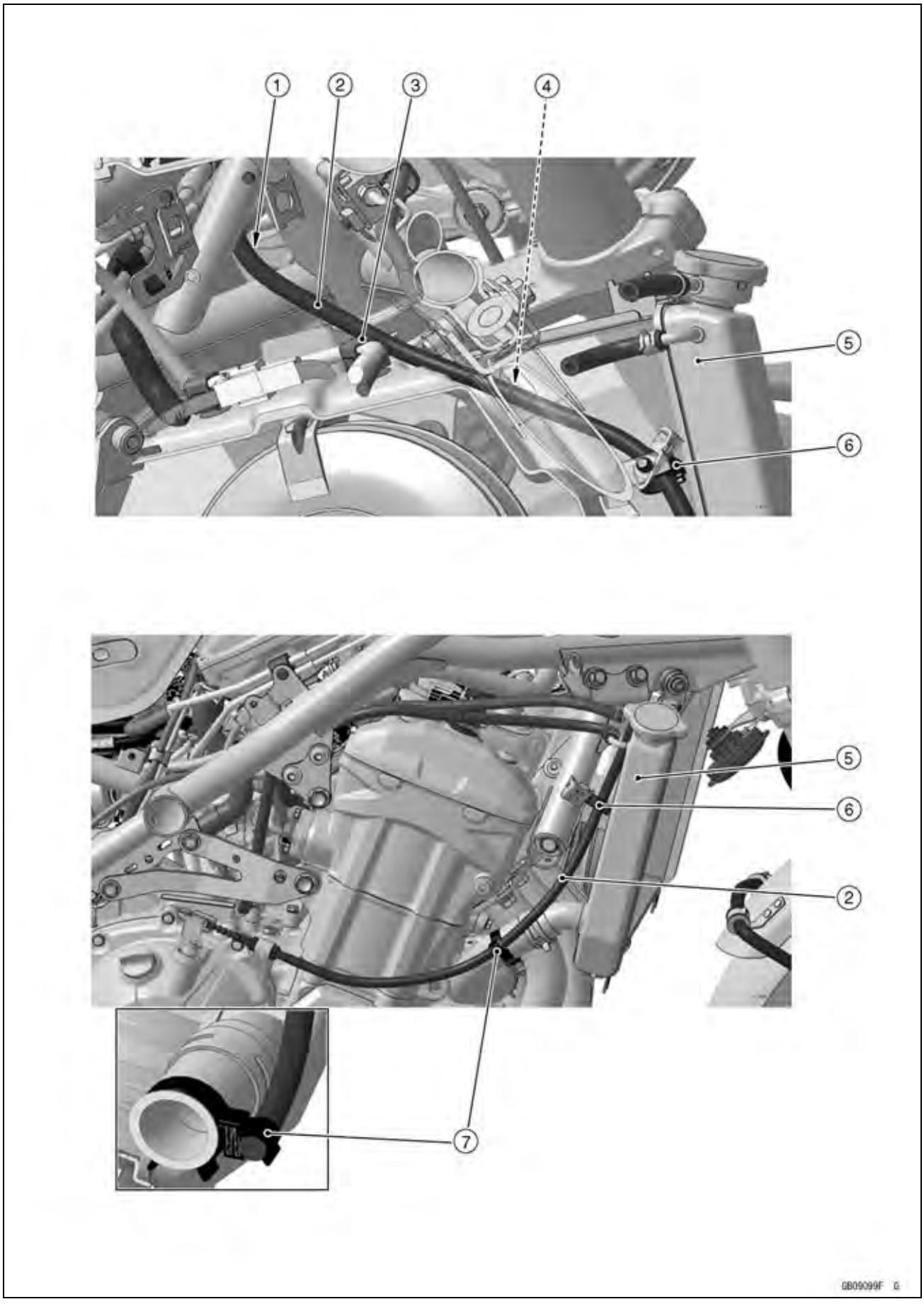

Cable, Wire, and Hose Routing

1. Run the clutch cable through the frame as shown.
2. Clutch Cable
3. Clamp (Hold the ignition switch lead and radiator fan motor lead.)
4. Run the clutch cable between the heat insulation rubber plate and frame.
5. Radiator
6. Clamp (Hold the clutch cable.)
7. Clamp (Hold the clutch cable, and install the clamp as shown.)

Cable, Wire, and Hose Routing

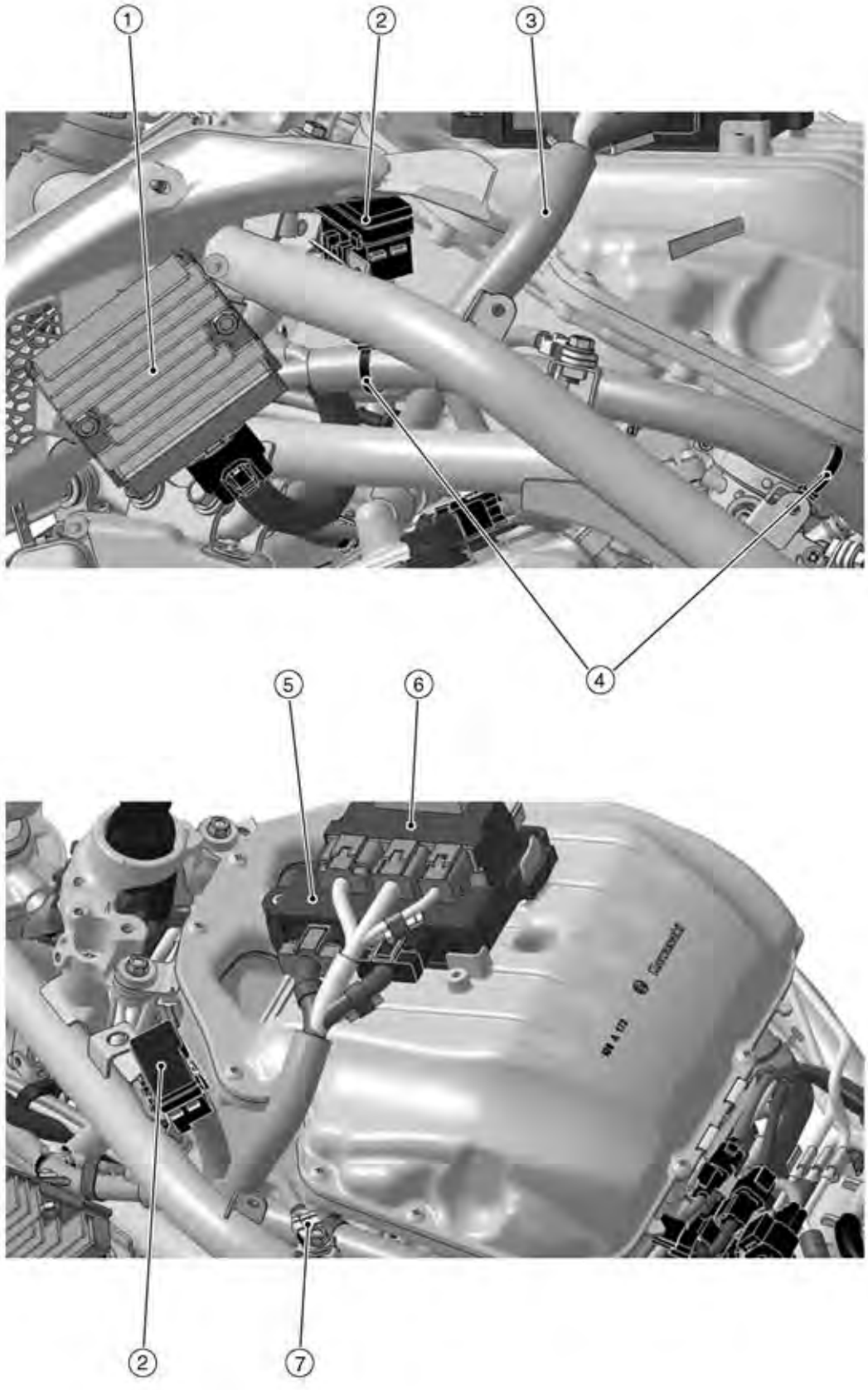

Cable, Wire, and Hose Routing

1. Regulator/Rectifier
2. Fuse Box (1)
3. ECU Leads
4. Clamps (Hold the main harness, and install them to the frame.)
5. ECU
6. Relay Box
7. Frame Ground Terminal

Cable, Wire, and Hose Routing

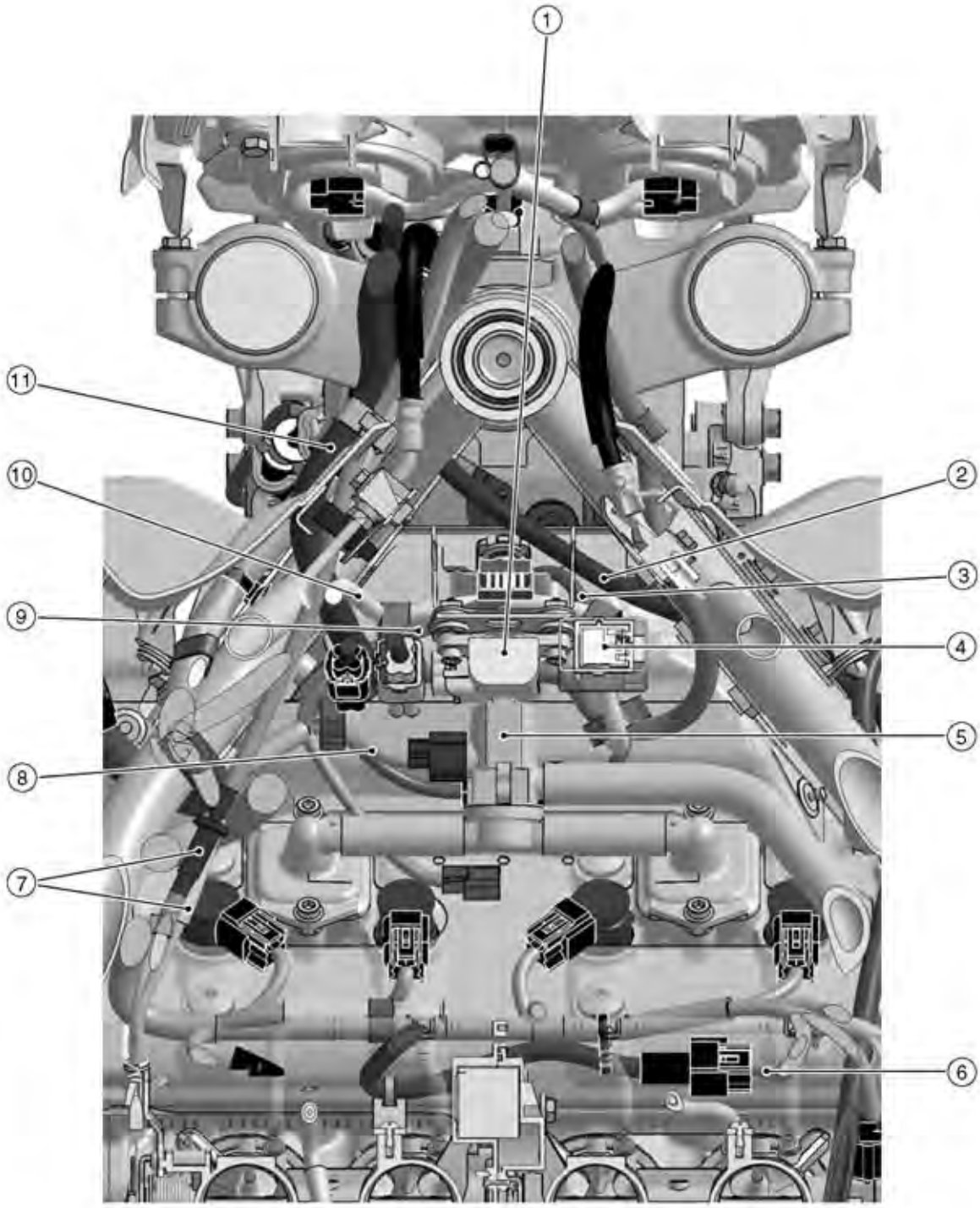

Cable, Wire, and Hose Routing

1. Vehicle-down Sensor
2. Clutch Cable (Run the clutch cable in front of the ignition switch lead connector.)
3. Radiator Fan Motor Lead
4. Ignition Switch Lead Connector
5. Air Switching Valve
6. Subthrottle Valve Actuator Lead
7. Throttle Cables
8. Air Switching Valve Lead
9. Immobilizer Amplifier Lead (Equipped Models)
10. Ignition Switch Lead
11. Left Switch Housing Lead

Cable, Wire, and Hose Routing

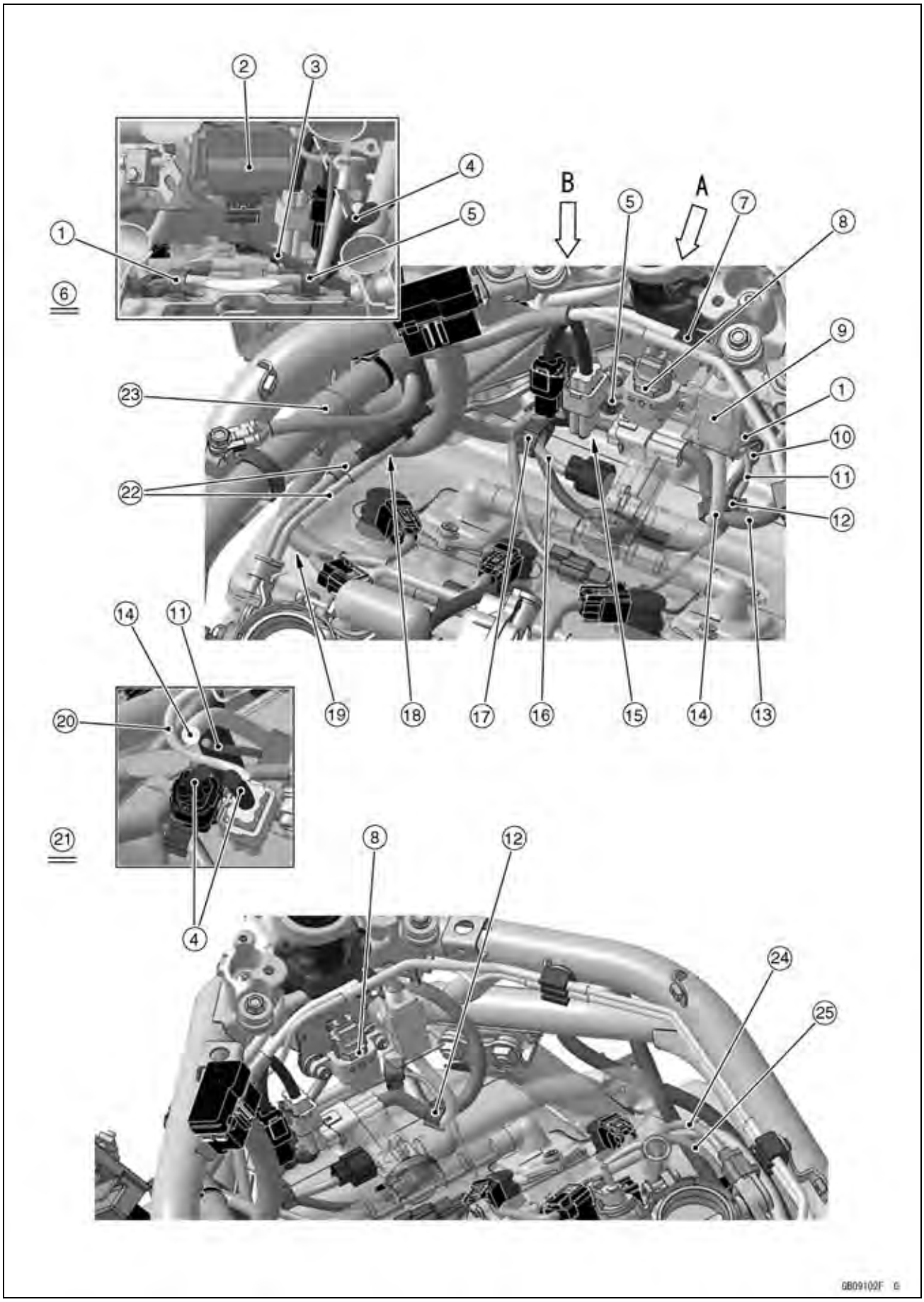

Cable, Wire, and Hose Routing

1. Clamp (Hold the immobilizer antenna lead (equipped models), ignition switch lead and radiator fan motor lead.)
2. Immobilizer Amplifier (Equipped Models)
3. Immobilizer Amplifier Lead (Equipped Models)
4. Left Switch Housing Lead
5. Clamp (Hold the immobilizer antenna lead (equipped models) and ignition switch lead.)
6. Viewed from A
7. Clamp (Hold the ignition switch lead.)
8. Vehicle-down Sensor
9. Ignition Switch Lead Connector
10. Radiator Fan Motor Lead
11. Immobilizer Antenna Lead (Equipped Models)
12. Clamp (Hold the immobilizer antenna lead (equipped models), right switch housing lead, ignition switch lead and radiator fan motor lead. Install the clamp to the cover as shown.)
13. Right Switch Housing Lead
14. Ignition Switch Lead
15. Do not pinch the left switch housing lead between the vehicle-down sensor and air cleaner housing as shown.
16. Air Switching Valve Lead
17. Clamp (Hold the air switching valve and radiator fan motor lead. Install the clamp to the cover as shown.)
18. Run the throttle cables inside of the main harness.
19. Run the main harness under the throttle cables.
20. Brake Pipe (ABS Equipped Models)
21. Viewed from B
22. Throttle Cables
23. Main Harness
24. Subthrottle Sensor Lead
25. Main Throttle Sensor Lead

Cable, Wire, and Hose Routing

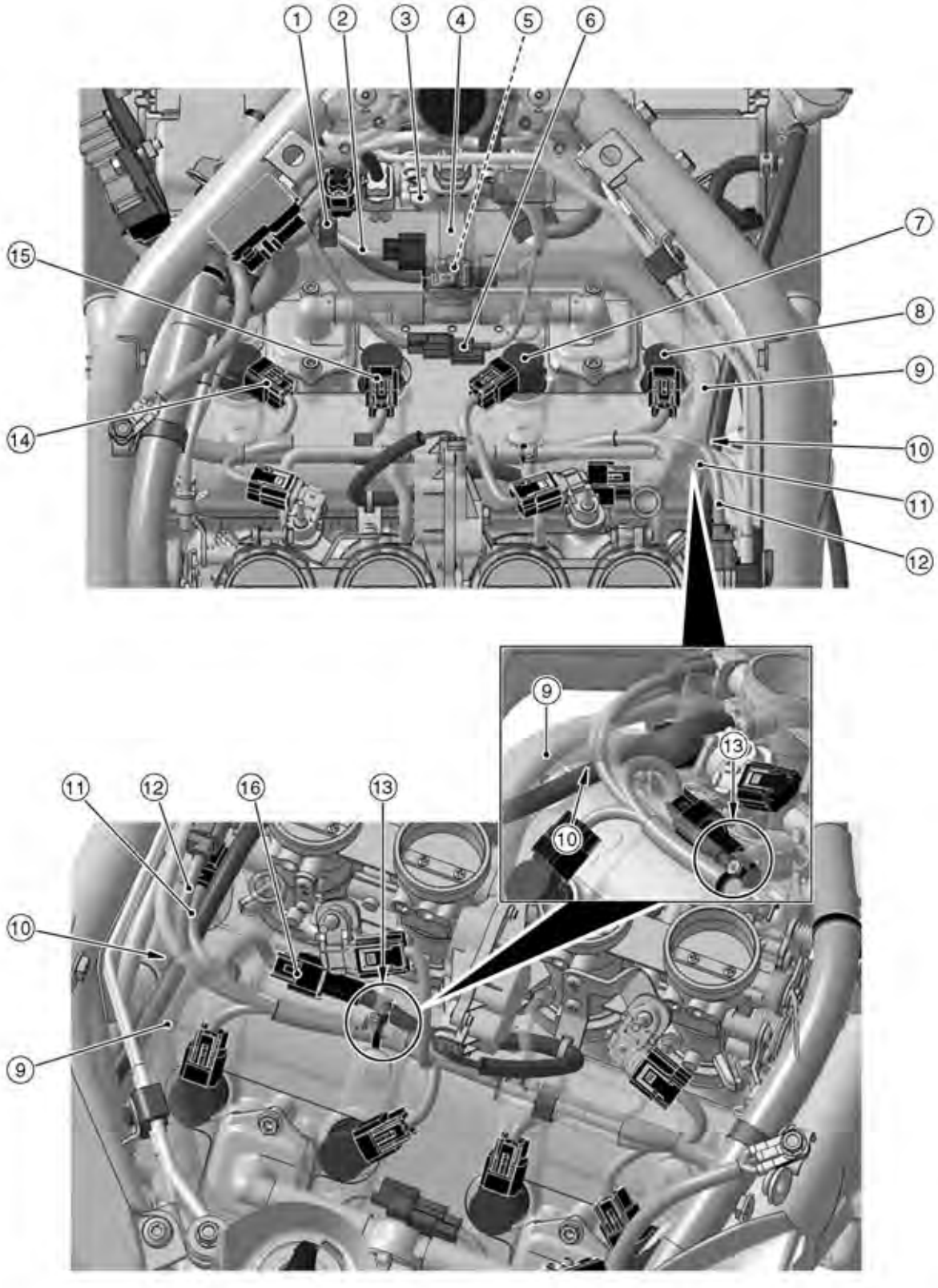

Cable, Wire, and Hose Routing

1. Clamp (Hold the air switching valve and radiator fan motor lead.)
2. Air Switching Valve Lead
3. Install the right switch housing lead connector to the front of the air switching valve.
4. Air Switching Valve
5. Install the radiator fan motor lead connector under the air switching valve.
6. Install the immobilizer antenna lead connector (equipped models) under the air switching valve.
7. Fuel Injector #3
8. Fuel Injector #4
9. Air Switching Valve Hose
10. Run the main throttle sensor lead and subthrottle sensor lead under the air switching valve hose.
11. Subthrottle Sensor Lead
12. Main Throttle Sensor Lead
13. Clamp (Hold the subthrottle valve actuator harness and main harness.)
14. Fuel Injector #1
15. Fuel Injector #2
16. Subthrottle Valve Actuator Lead Connector

Cable, Wire, and Hose Routing

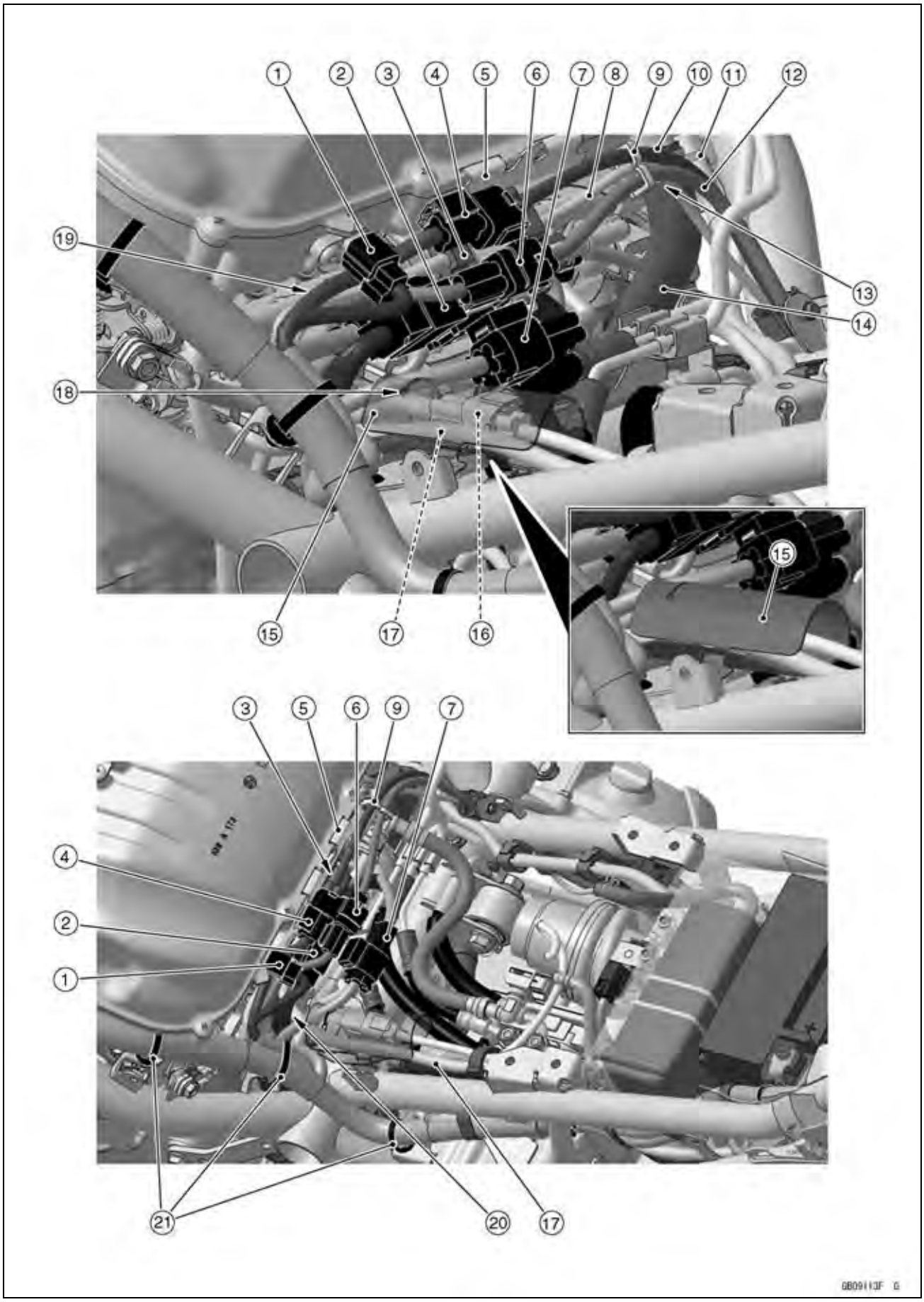

Cable, Wire, and Hose Routing

1. Intake Air Temperature Sensor Lead Connector
2. Alternator Lead Connector (Install it to the connector bracket.)
3. Rear Wheel Rotation Sensor Lead Connector (Install it to the connector bracket.)
4. Oxygen Sensor Lead Connector (Install it to the connector bracket.)
5. Connector Bracket (Install it to the air cleaner housing.)
6. Crankshaft Sensor Lead Connector
7. Engine Subharness Connector (Install it to the connector bracket.)
8. Rear Wheel Rotation Sensor Lead
9. Clamp (Hold the oxygen sensor lead, rear wheel rotation sensor lead and crankshaft sensor lead.)
10. Oxygen Sensor Lead
11. Do not touch the rear wheel rotation sensor lead to the clamp of the breather hose.
12. Crankshaft Sensor Lead
13. Make sure that the rear wheel rotation sensor lead has no slack as shown.
14. Breather Hose
15. Rubber Cover (Cover the fuel pump lead and starter motor cable.)
16. Fuel Pump Lead Connector
17. Starter Motor Cable
18. Run the engine subharness into the hole of the rubber cover.
19. Run the oxygen sensor lead, rear wheel rotation sensor lead and crankshaft sensor lead under the intake air temperature sensor lead connector.
20. Run the starter motor cable between the alternator lead and main harness.
21. Clamps (Hold the main harness, and install them to the frame.)

Cable, Wire, and Hose Routing

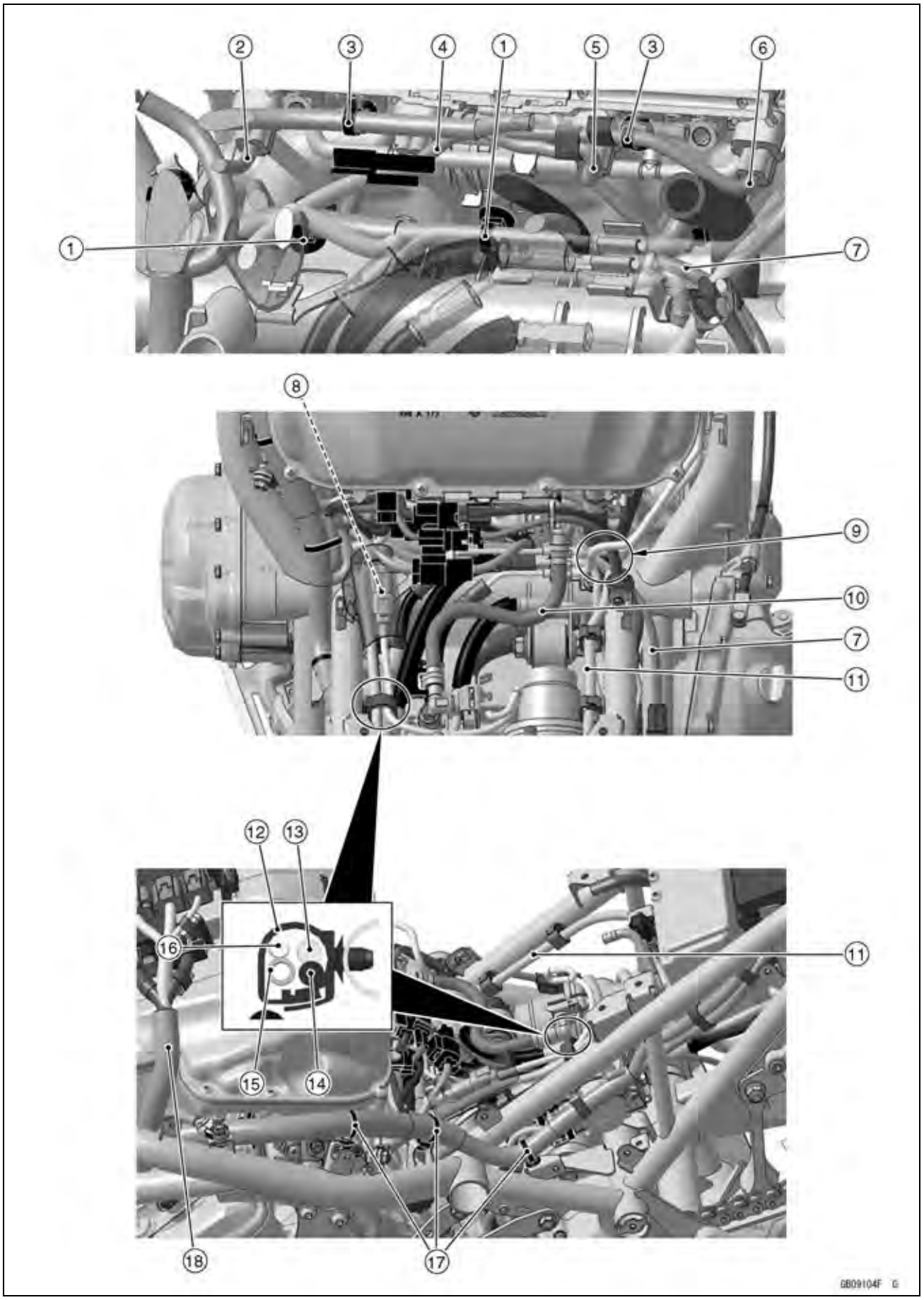

Cable, Wire, and Hose Routing

1. Clamps (Hold the main harness, and install them to the brackets.)
2. Fuel Injector #1
3. Clamps (Hold the main harness, and install them to the throttle body assy.)
4. Fuel Injector #2
5. Fuel Injector #3
6. Fuel Injector #4
7. Rear Brake Light Switch Lead
8. Rubber Cover (Cover the fuel pump lead connector and starter motor cable.)
9. Run the oxygen sensor lead, rear wheel rotation sensor lead and crankshaft sensor lead between the brake pipes (ABS equipped models).
10. Fuel Hose
11. Purge Hose (from Throttle Body Assy, Equipped Models)
12. Clamp (Hold the fuel pump lead, starter motor cable, battery negative (–) cable and fuel tank drain hose.)
13. Starter Motor Cable
14. Battery Negative (–) Cable
15. Fuel Tank Drain Hose
16. Fuel Pump Lead
17. Clamps (Hold the main harness, and install them to the frame.)
18. ECU Lead

Cable, Wire, and Hose Routing

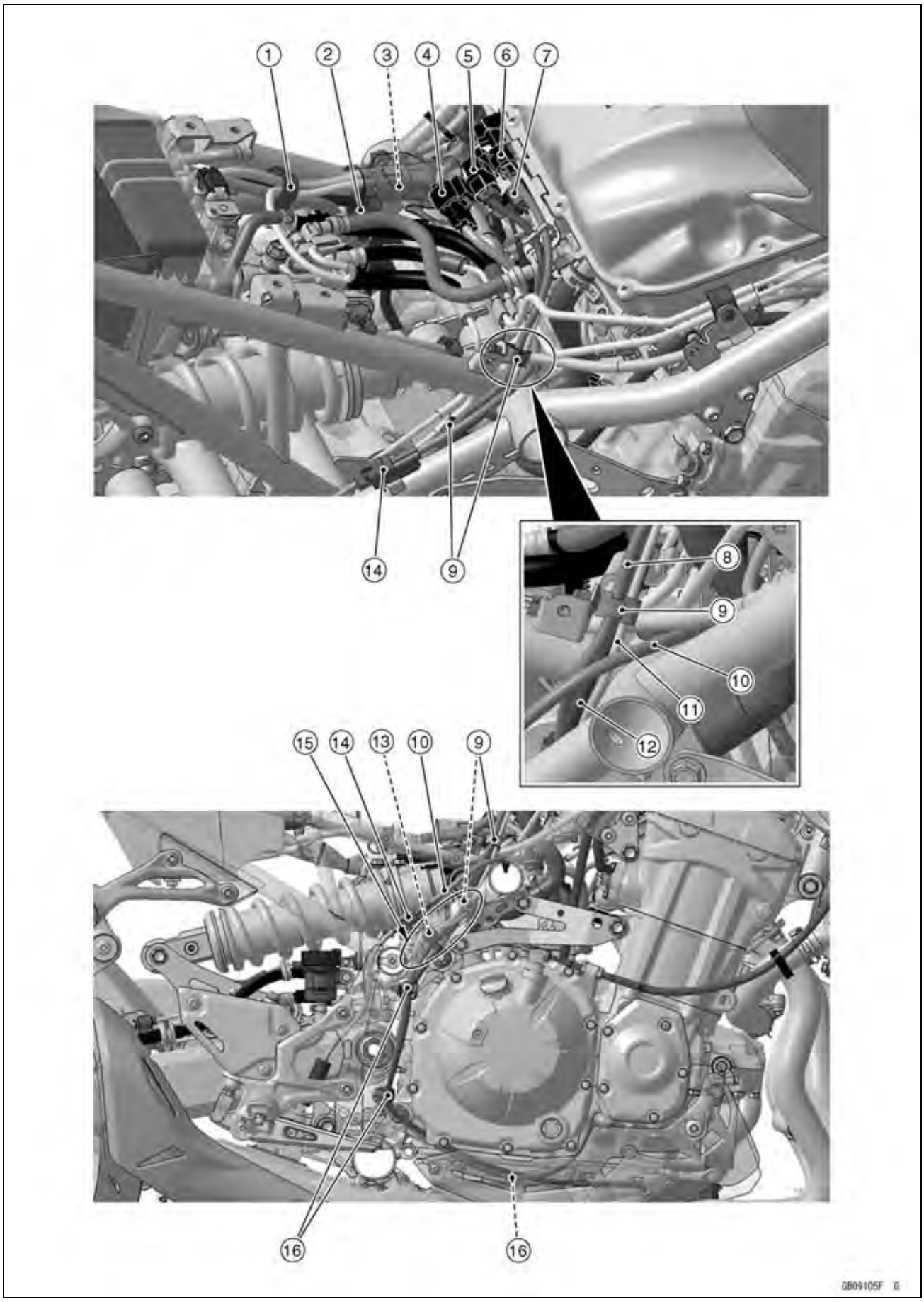

Cable, Wire, and Hose Routing

1. Clamp (Hold the fuel pump lead, starter motor cable, battery negative (–) cable and fuel tank drain hose.)
2. Clamp (Hold the battery negative (–) cable.)
3. Fuel Pump Lead Connector
4. Engine Subharness Connector
5. Crankshaft Sensor Lead Connector
6. Oxygen Sensor Lead Connector
7. Rear Wheel Rotation Sensor Lead Connector
8. Crankshaft Sensor Lead
9. Clamps (Hold the oxygen sensor lead, rear wheel rotation sensor lead and crankshaft sensor lead. Face the open side of the clamp to the outside.)
10. Rear Brake Light Switch Lead
11. Rear Wheel Rotation Sensor Lead
12. Oxygen Sensor Lead
13. Clamp (Hold the rear wheel rotation sensor lead.)
14. Install the rear brake light switch lead connector to the frame.
15. This area of the rear wheel rotation sensor lead to avoid slack.
16. Clamps (Hold the oxygen sensor lead and crankshaft sensor lead.)

Cable, Wire, and Hose Routing

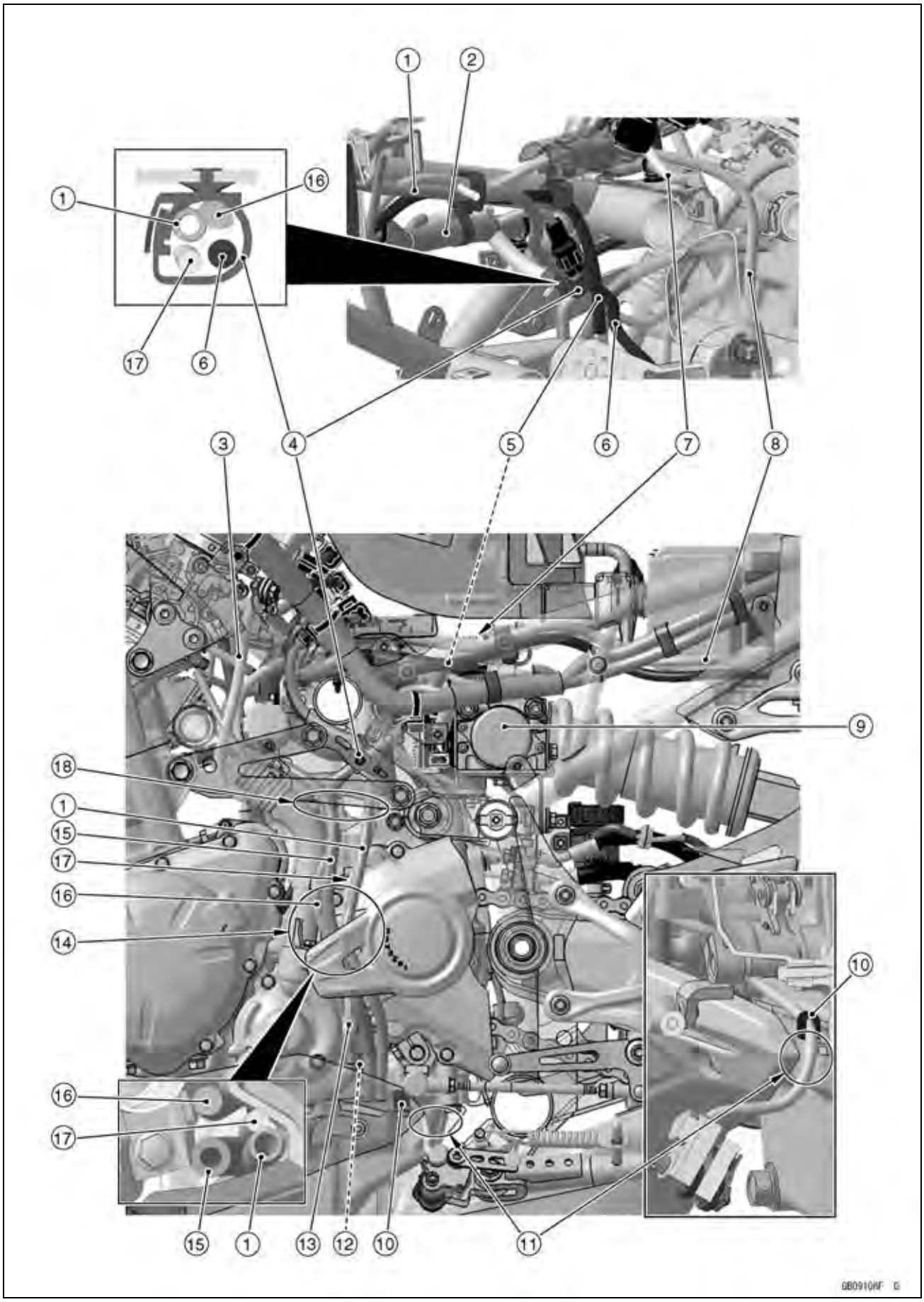

Cable, Wire, and Hose Routing

1. Fuel Tank Drain Hose
2. ABS Hydraulic Unit Lead (ABS Equipped Models)
3. Air Cleaner Drain Hose
4. Clamp (Hold the engine subharness, side stand switch lead, fuel tank drain hose and alternator lead.)
5. Battery Negative (–) Cable
6. Alternator Lead
7. Fuel Pump Lead
8. Starter Motor Cable
9. ABS Hydraulic Unit (ABS Equipped Models)
10. Clamp (Hold the side stand switch lead.)
11. Take care not to pinch the side stand switch lead by the lower fairing.
12. Gear Position Sensor Lead Connector
13. Clamp (Hold the engine subharness and side stand switch lead.)
14. Run the side stand switch lead, engine subharness, fuel tank drain hose and fuel tank breather hose (other than evaporative emission control system equipped models) to the inside of the engine sprocket cover.
15. Reserve Tank Overflow Hose
16. Engine Subharness
17. Side Stand Switch Lead
18. Run the side stand switch lead and engine subharness to inside of the fuel tank drain hose and fuel thank breather hose. Do not touch the harness to the bracket.

Cable, Wire, and Hose Routing

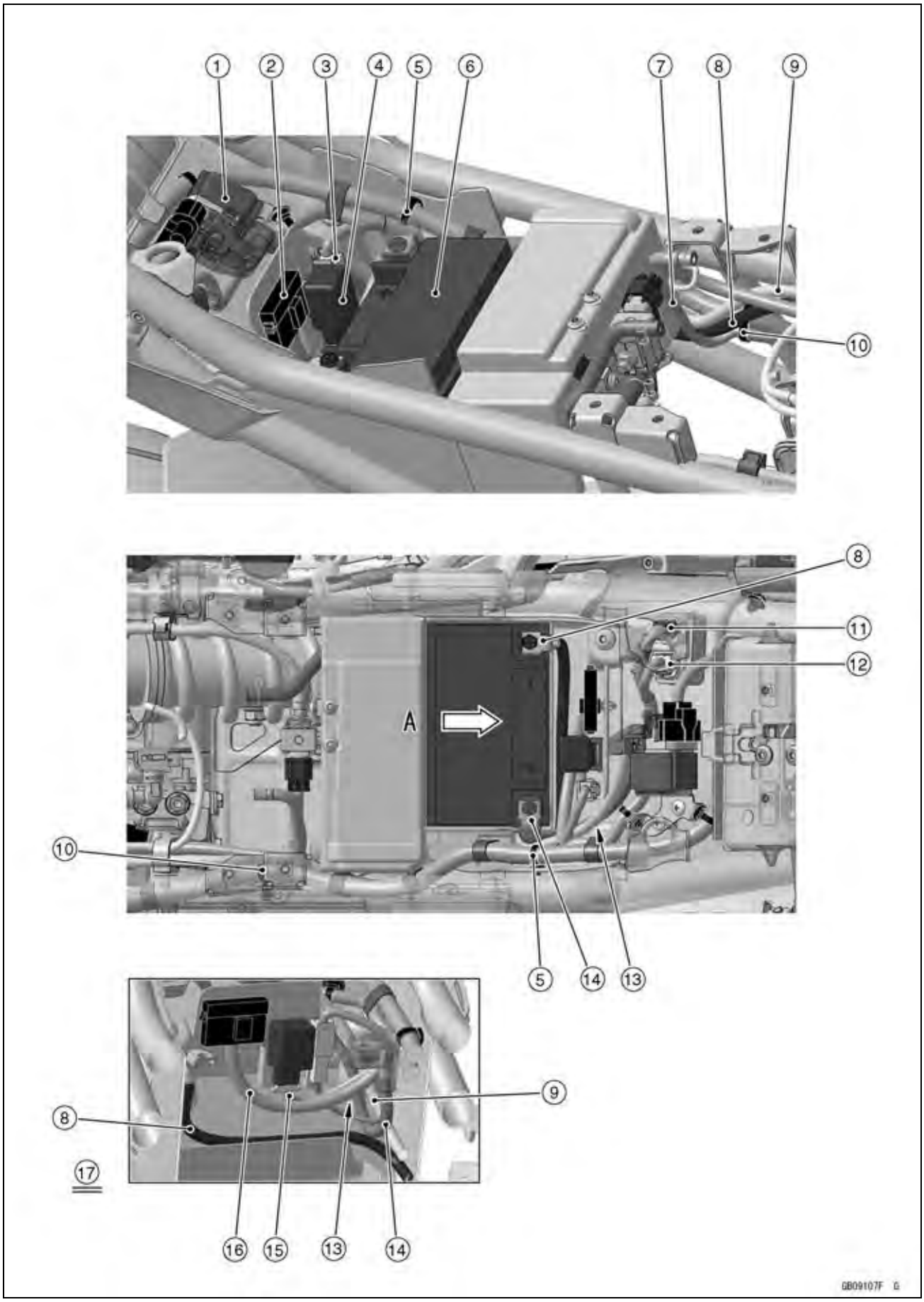

Cable, Wire, and Hose Routing

1. Starter Relay (Install it to the bracket.)
2. Fuse Box (2) (Install it to the battery case.)
3. Battery Positive (+) Cable Connector (Install it to the battery case.)
4. Turn Signal Relay (Install it to the battery case.)
5. Clamp (Hold the main harness, and install it to the battery case.)
6. Battery
7. Purge Valve Lead (Equipped Models)
8. Battery Negative (–) Cable
9. Starter Motor Cable
10. Clamp (Hold the main harness and purge valve lead, equipped models.)
11. ABS Kawasaki Diagnosis System Connector (ABS Equipped Models)
12. Kawasaki Diagnostic System Connector
13. Run the turn signal relay and fuse box (2) lead to the front side of the battery positive (+) cable and starter motor cable.
14. Battery Positive (+) Cable
15. Turn Signal Relay Lead
16. Fuse Box (2) Lead
17. Viewed from A

Cable, Wire, and Hose Routing

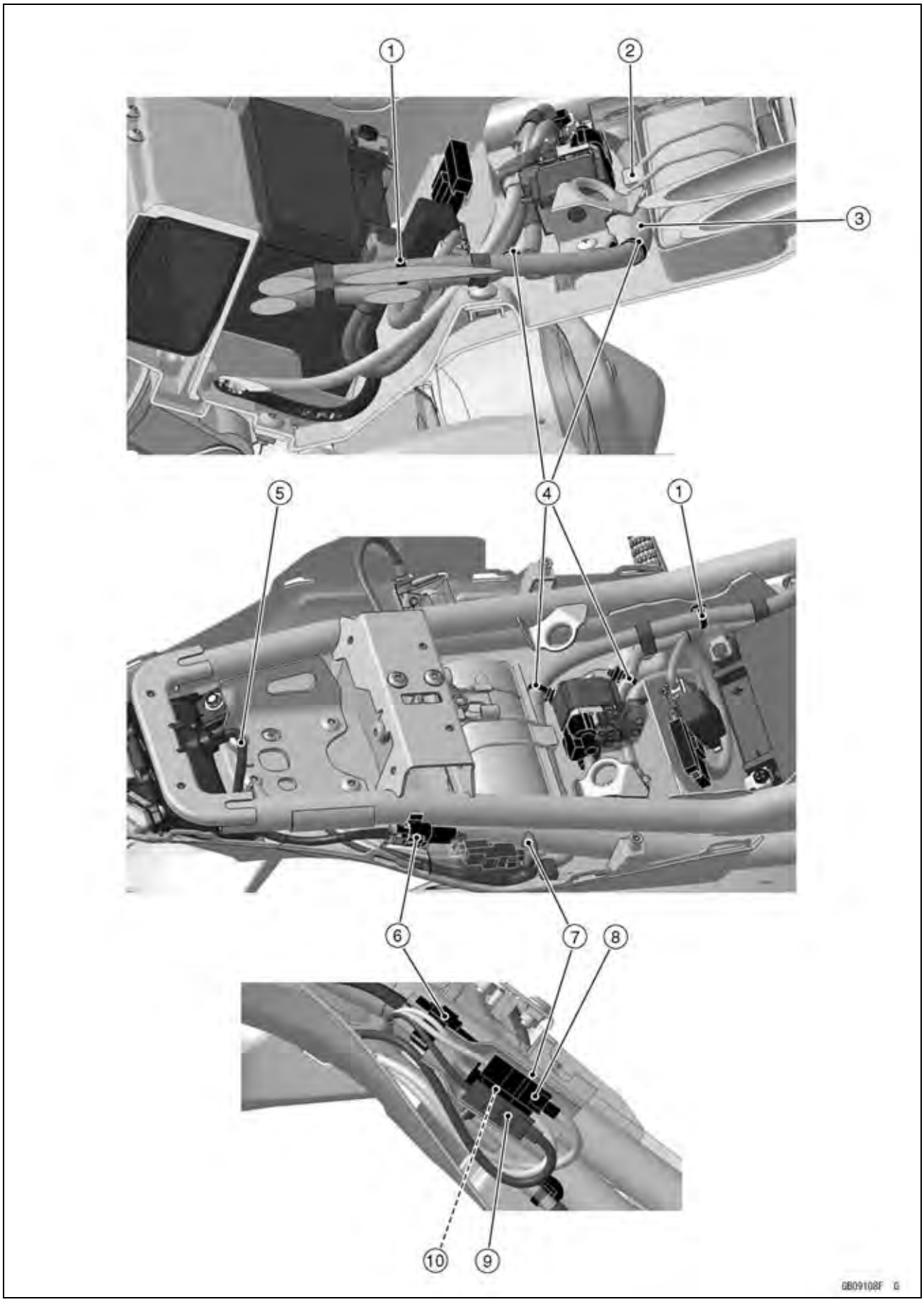

Cable, Wire, and Hose Routing

1. Clamp (Hold the main harness, and install it to the battery case.)
2. Run the main harness under the hook of rear fender.
3. Main Harness
4. Clamps (Hold the main harness, and install them to the bracket.)
5. Tail/Brake Light Lead
6. Tail/Brake Light Lead Connector (Install it to the frame.)
7. Cover the left rear turn signal light lead connector, right rear turn signal light lead connector and license plate light lead connector with the dust cover. Install the dust cover as shown.
8. Left Rear Turn Signal Light Lead Connector
9. Right Rear Turn Signal Light Lead Connector
10. License Plate Light Lead Connector

Cable, Wire, and Hose Routing

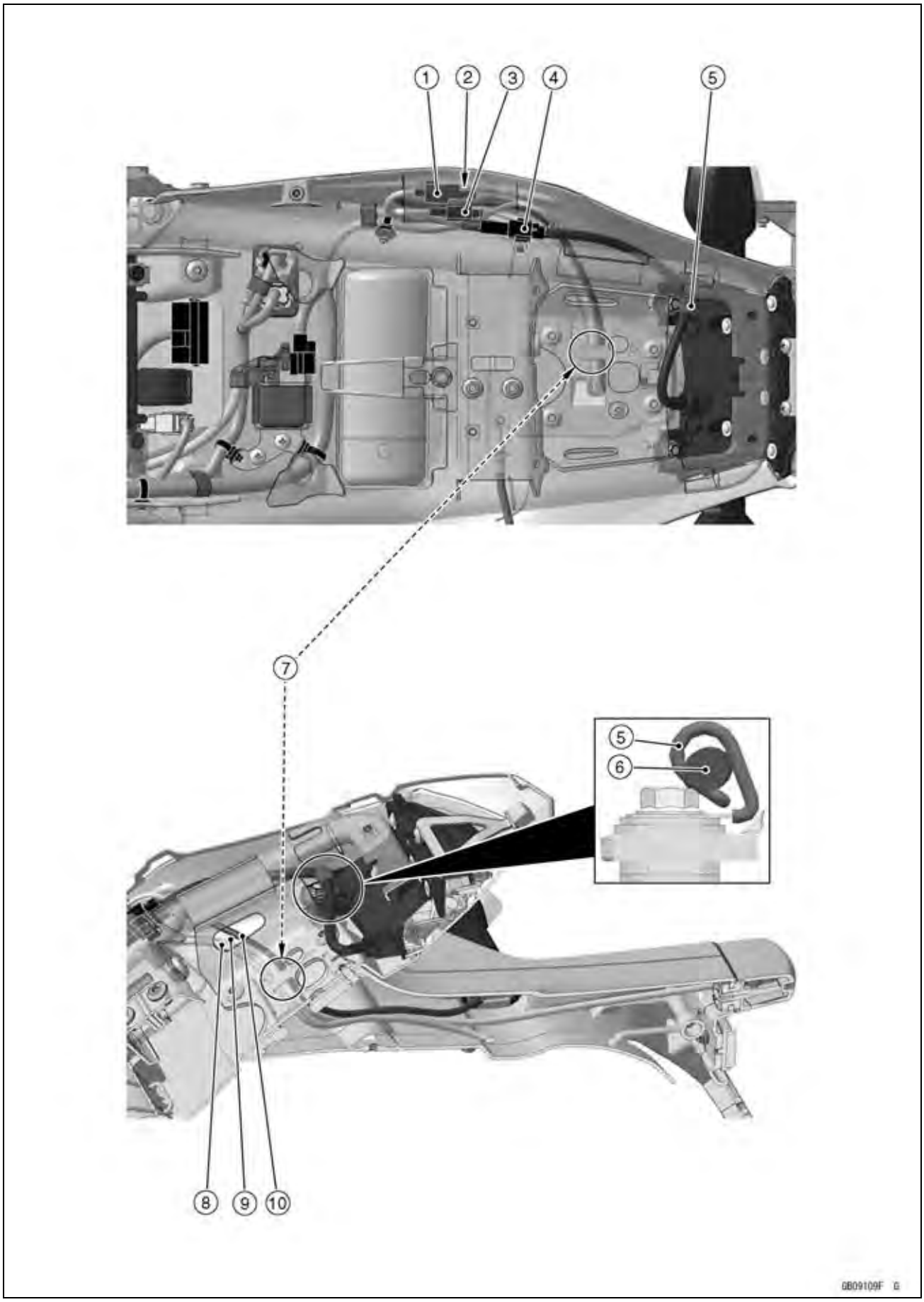

Cable, Wire, and Hose Routing

1. Left Rear Turn Signal Light Lead Connector
2. Right Rear Turn Signal Light Lead Connector
3. License Plate Light Lead Connector
4. Tail/Brake Light Lead Connector (Install it to the frame.)
5. Clamp (Hold the tail/brake light lead.)
6. Tail/Brake Light Lead
7. Run the left rear turn signal light lead, right rear turn signal light lead and license plate light lead under the hook of rear fender. Do not pinch them with the rear fender.
8. Rear Left Turn Signal Light Lead
9. License Plate Light Lead
10. Rear Right Turn Signal Light Lead

Cable, Wire, and Hose Routing

Other than MY Models

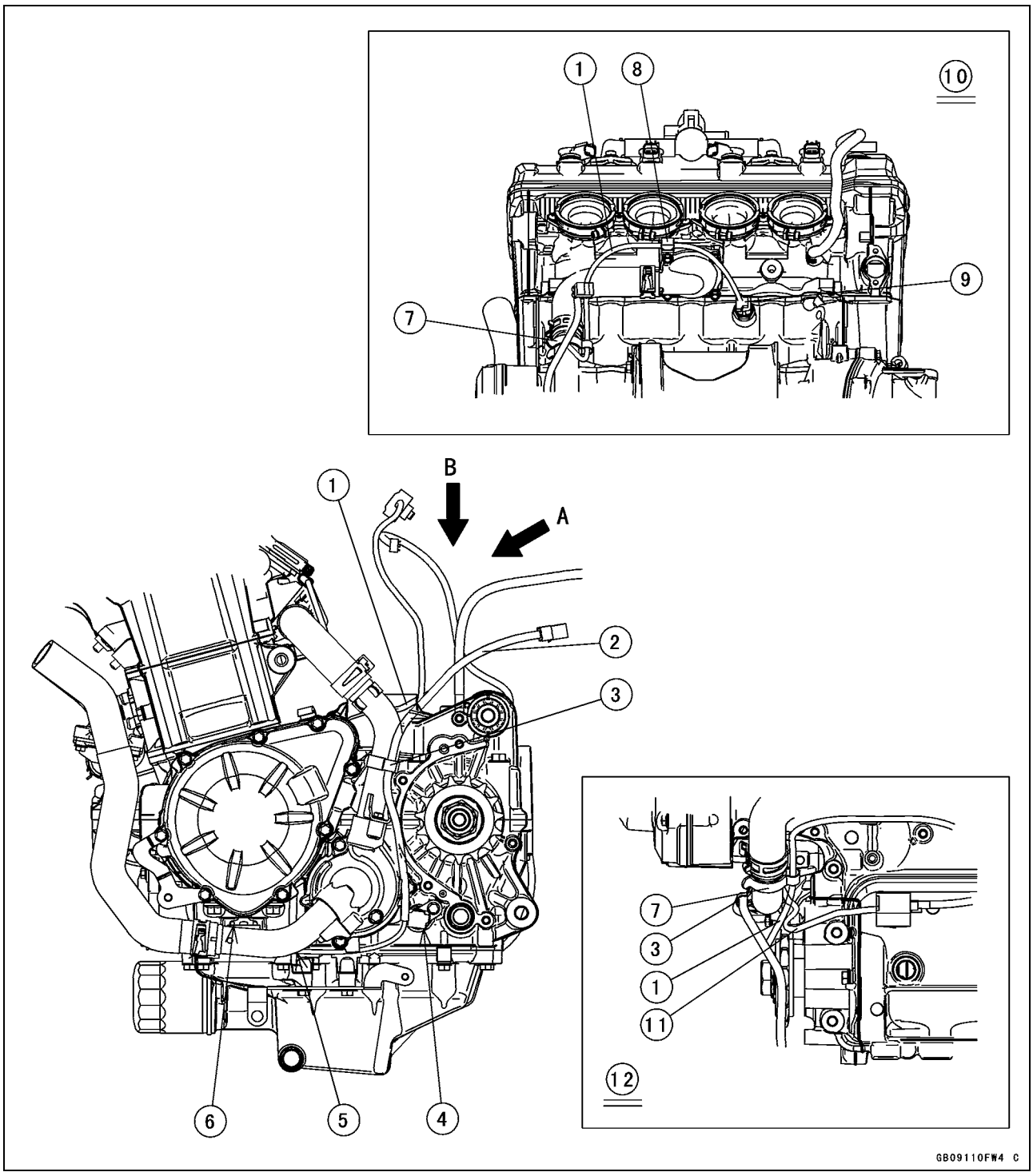

1. Water Temperature Sensor Lead
2. Engine Subharness
3. Clamp (Hold the gear position sensor/oil pressure switch lead. Install the clamp to the water pipe as shown.)
4. Connect the gear position sensor lead to the gear position sensor.
5. Run the oil pressure switch lead to the inside of the water hose.
6. Cover the oil pressure switch with the switch cover.
7. Clamp (Hold the water temperature sensor lead. Install the clamp to the water pipe as shown.)
8. Clamp (Hold the water temperature sensor lead.)
9. Connect the water temperature sensor lead to the water temperature sensor.
10. Viewed from A
11. Run the alternator lead to the inside of the water pipe and water temperature sensor lead.
12. Viewed from B

Cable, Wire, and Hose Routing

MY Models

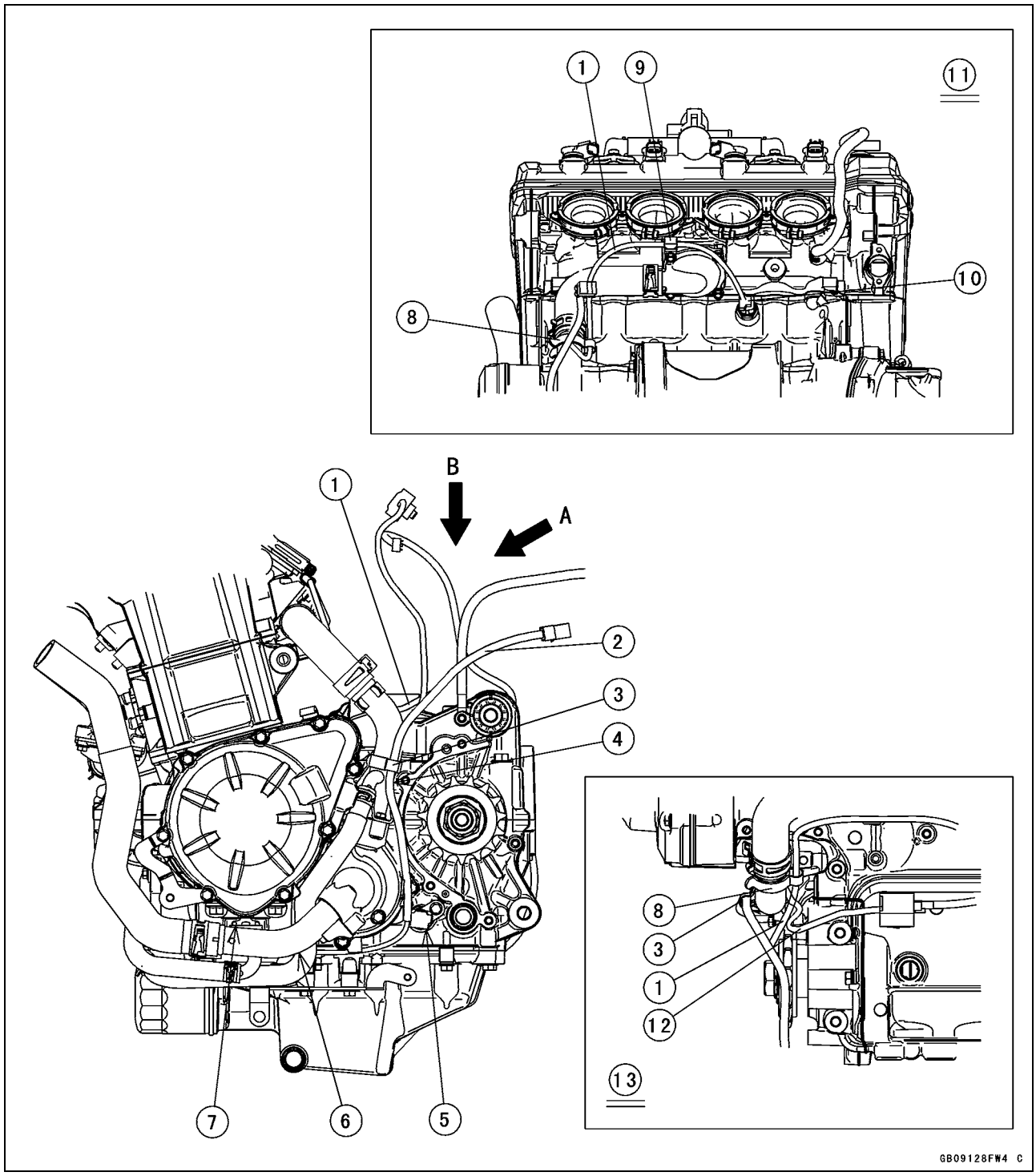

1. Water Temperature Sensor Lead
2. Engine Subharness
3. Clamp (Hold the gear position sensor/oil pressure switch lead. Install the clamp to the upside of the water pipe branch.)
4. Run the gear position sensor/oil pressure switch lead to the rear side of the water pipe branch.
5. Connect the gear position sensor lead to the gear position sensor.
6. Run the oil pressure switch lead to the inside of the water hose.
7. Cover the oil pressure switch with the switch cover.
8. Clamp (Hold the water temperature sensor lead. Install the clamp to the water pipe as shown.)
9. Clamp (Hold the water temperature sensor lead.)
10. Connect the water temperature sensor lead to the water temperature sensor.
11. Viewed from A
12. Run the alternator lead to the inside of the water pipe and water temperature sensor lead.
13. Viewed from B

Cable, Wire, and Hose Routing

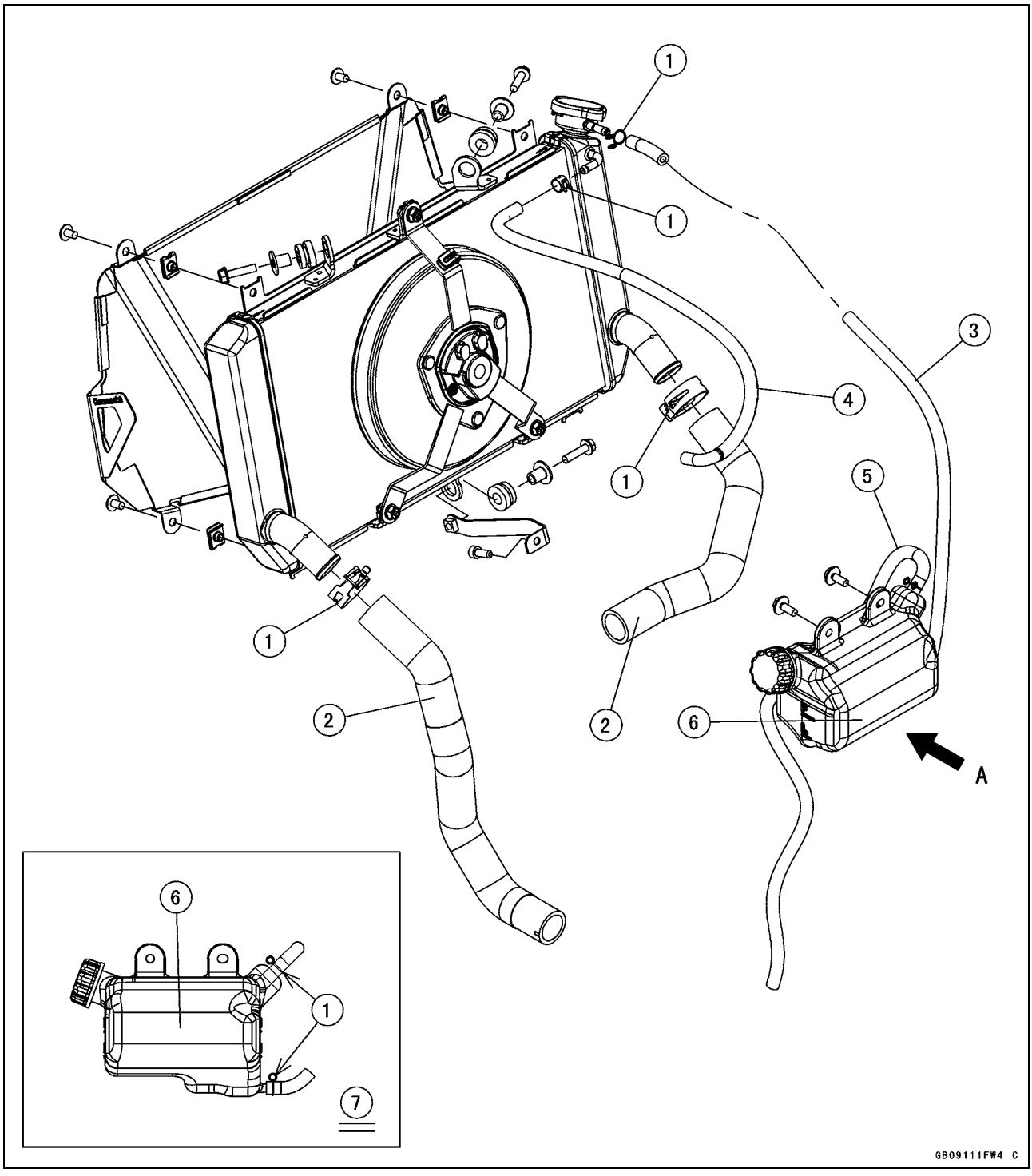

1. Install the clamps as shown.
2. Water Hoses
3. Radiator Overflow Hose
4. Air Bleeder Hose
5. Reserve Tank Overflow Hose
6. Coolant Reserve Tank
7. Viewed from A

This page intentionally left blank.

Cable, Wire, and Hose Routing

Other than MY Models

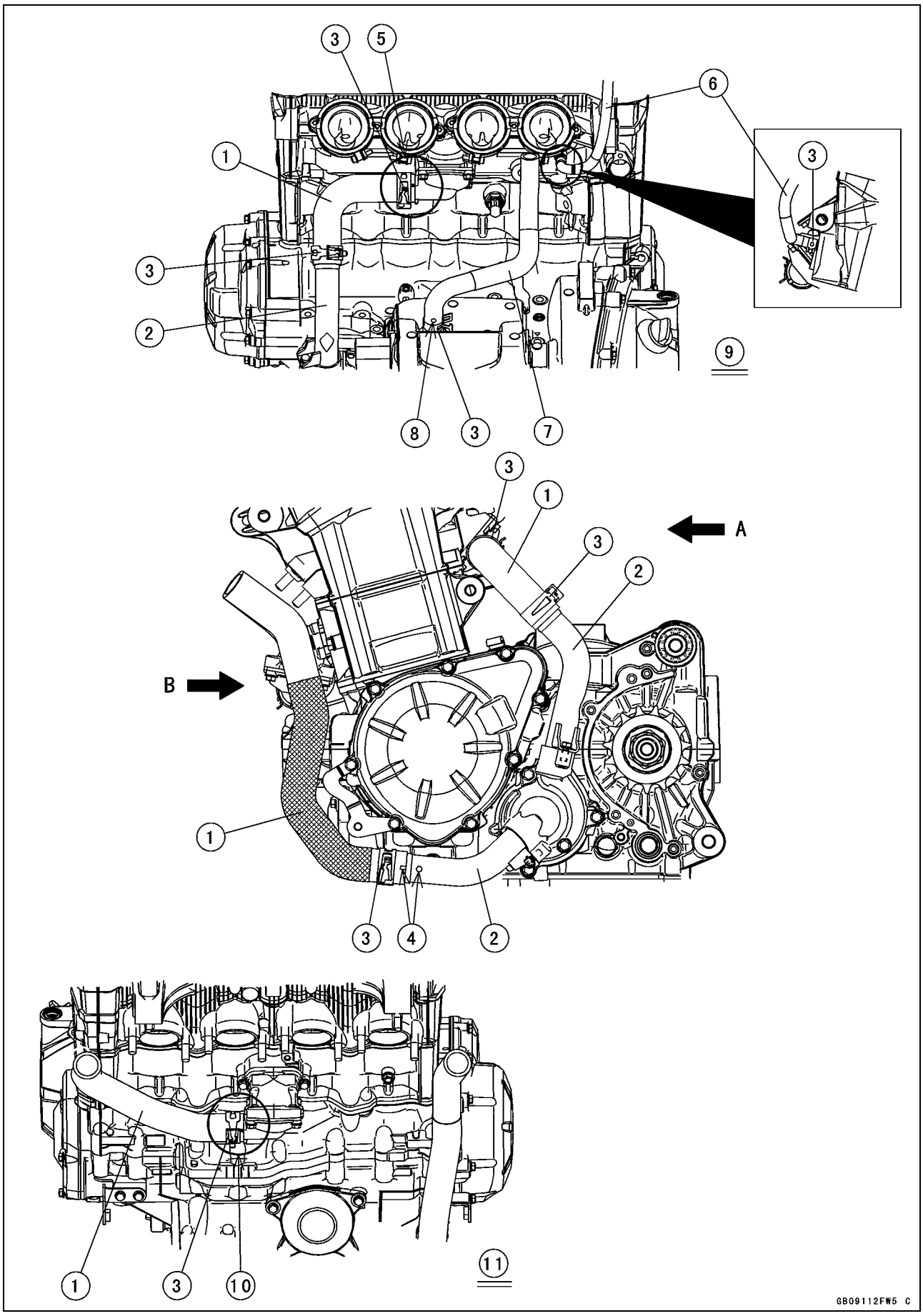

Cable, Wire, and Hose Routing

1. Water Hoses
2. Water Pipes
3. Install the clamps as shown.
4. Align the white paint mark of the water hose with the projection on the water pipe.
5. Align the white paint mark of the water hose with the mark on the thermostat housing cover.
6. Air Bleeder Hose
7. Breather Hose
8. Install the breather hose so that the white paint mark faces rearward.
9. Viewed from A
10. Align the white paint mark of the water hose with the mark on the water hose fitting.
11. Viewed from B

Cable, Wire, and Hose Routing

MY Models

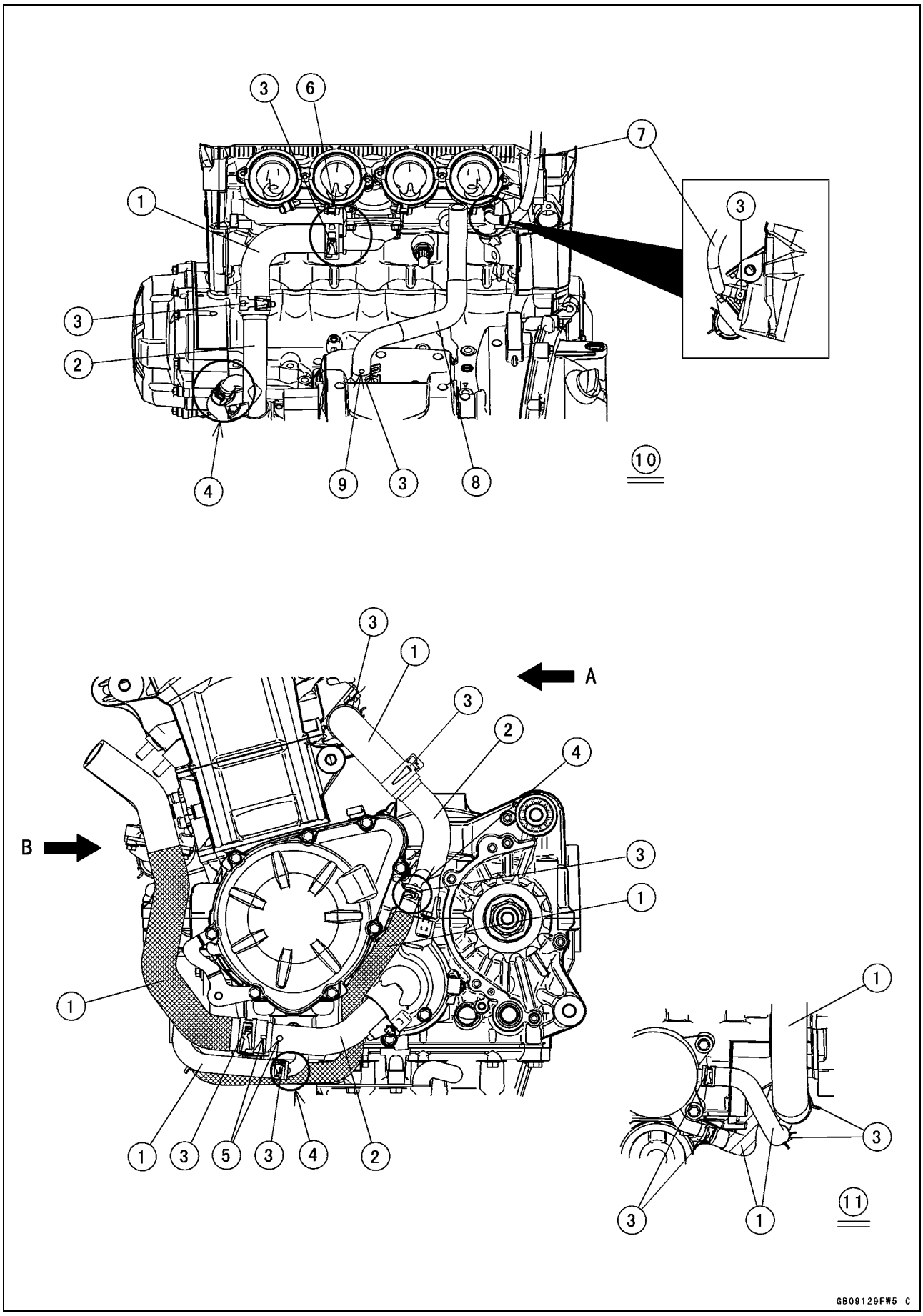

Cable, Wire, and Hose Routing

1. Water Hoses
2. Water Pipes
3. Install the clamps as shown.
4. Align the white paint mark of the water hose with the punch mark of the water pipe.
5. Align the white paint mark of the water hose with the projection on the water pipe.
6. Align the white paint mark of the water hose with the mark on the thermostat housing cover.
7. Air Bleeder Hose
8. Breather Hose
9. Install the breather hose so that the white paint mark faces rearward.
10. Viewed from A
11. Viewed from B

Cable, Wire, and Hose Routing

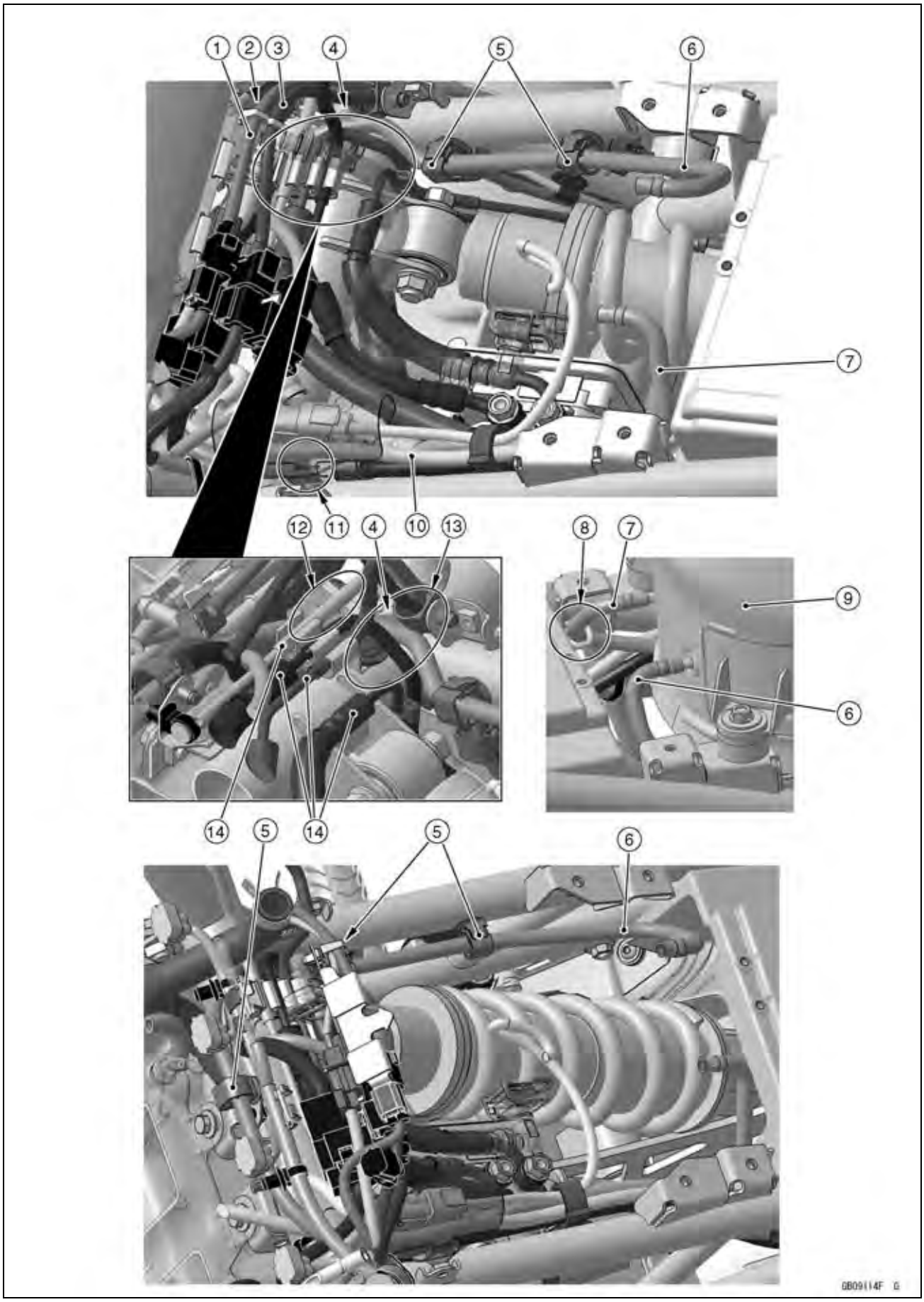

Cable, Wire, and Hose Routing

1. Crankshaft Sensor Lead
2. Rear Wheel Rotation Sensor Lead
3. Oxygen Sensor Lead
4. Rear Brake Light Switch Lead
5. Clamps (Hold the fuel tank breather hose.)
6. Fuel Tank Breather Hose
7. Fuel Tank Drain Hose
8. Run the fuel tank drain hose through the clamp.
9. Fuel Tank
10. Starter Motor Cable
11. Run the fuel tank breather hose between the starter motor cable and frame.
12. Run the fuel tank breather hose under the brake pipe. Run it to the upside of the rear brake light switch lead.
13. Run the fuel tank breather hose outside the brake pipes. Run it to the inside of the oxygen sensor lead, crankshaft sensor lead and rear wheel rotation sensor lead.
14. Brake Pipes

Cable, Wire, and Hose Routing

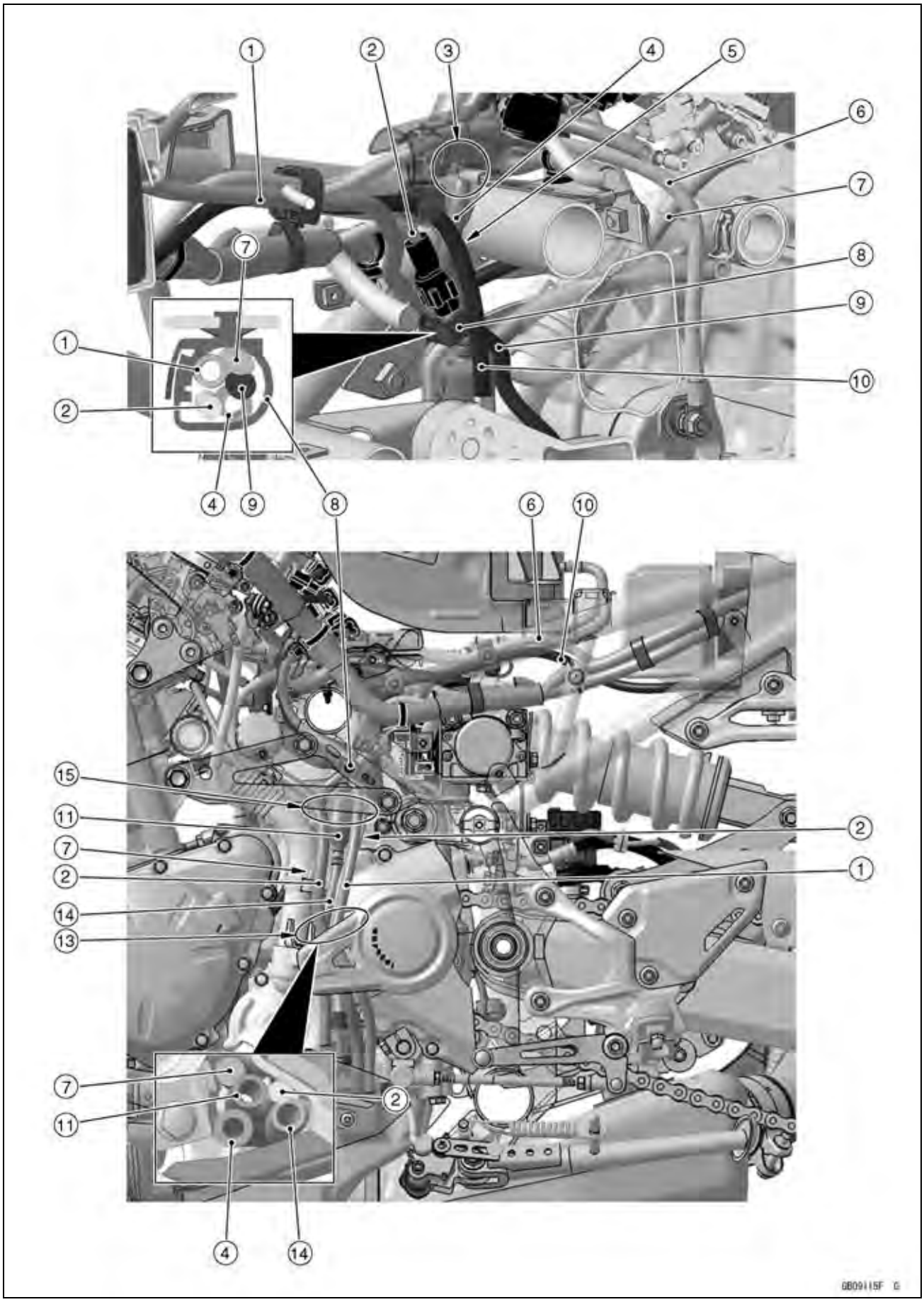

Cable, Wire, and Hose Routing

1. Fuel Tank Drain Hose
2. Side Stand Switch Lead
3. Run the fuel tank breather hose between the starter motor cable and frame.
4. Fuel Tank Breather Hose
5. Run the fuel tank breather hose outside the battery negative (–) cable.
6. Starter Motor Cable
7. Engine Subharness
8. Clamp (Hold the engine subharness, side stand switch lead, alternator lead, fuel tank drain hose and fuel tank breather hose.)
9. Alternator Lead
10. Battery Negative (–) Cable
11. Breather Tank
12. Reserve Tank Overflow Hose
13. Run the side stand switch lead, engine subharness, fuel tank drain hose, fuel tank breather hose and reserve tank overflow hose to the inside of the engine sprocket cover.
14. Breather Tank Hose
15. Run the side stand switch lead and engine subharness to inside of the fuel tank drain hose, fuel tank breather hose and reserve tank overflow hose. Do not touch the harness to the bracket.

Cable, Wire, and Hose Routing

ABS Equipped Models

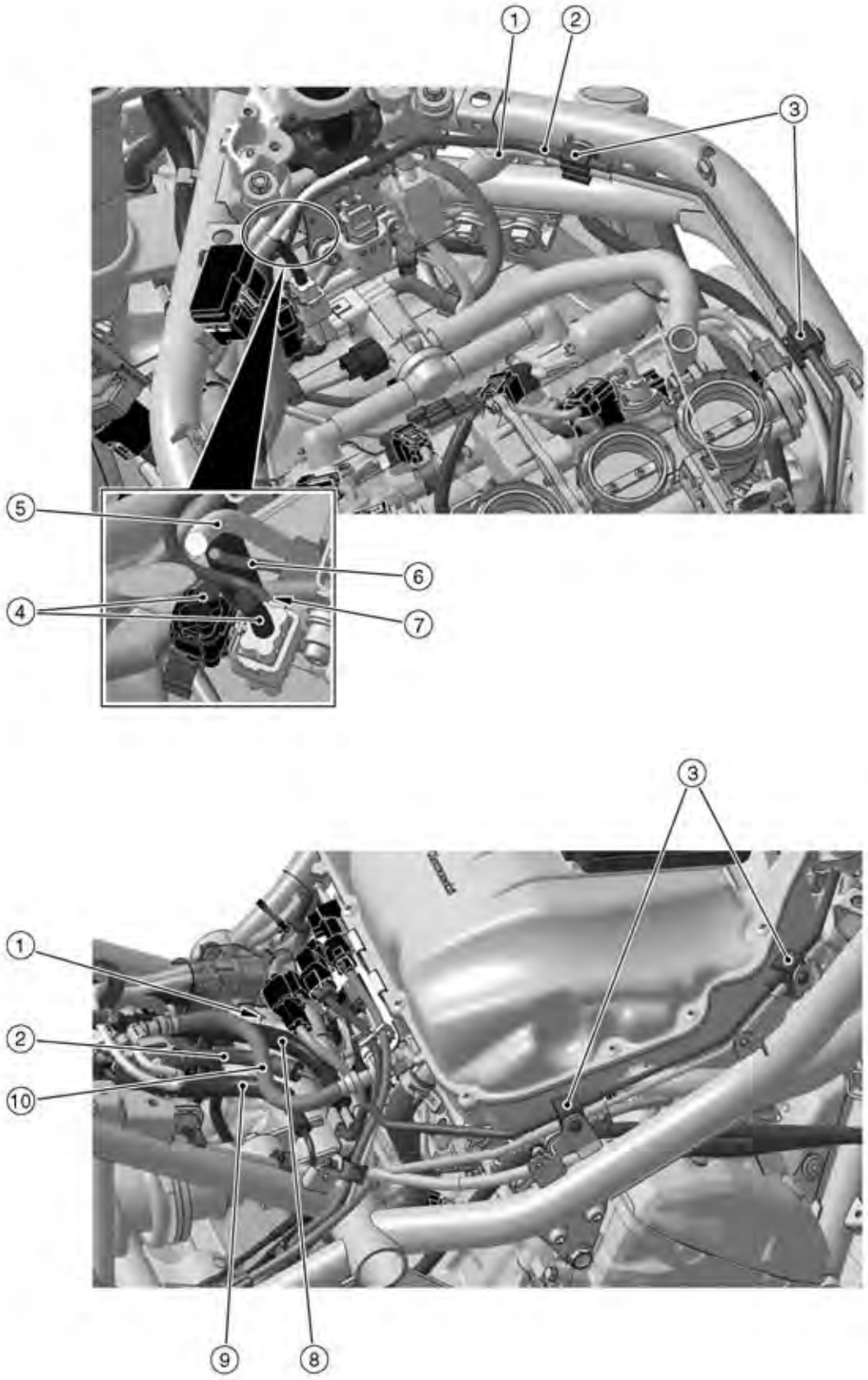

Cable, Wire, and Hose Routing

1. Front Brake Pipe (Front Master Cylinder ~ ABS Hydraulic Unit)
2. Front Brake Pipe (ABS Hydraulic Unit ~ Front Caliper)
3. Clamp (Hold the brake pipes.)
4. Left Switch Housing Leads
5. Ignition Switch Lead
6. Immobilizer Amplifier Lead (Equipped Models)
7. Run the brake pipes in front of the left switch housing lead.
8. Rear Brake Pipe (ABS Hydraulic Unit ~ Rear Master Cylinder)
9. Rear Brake Pipe (ABS Hydraulic Unit ~ Rear Caliper)
10. Fuel Hose

Cable, Wire, and Hose Routing

ABS Equipped Models

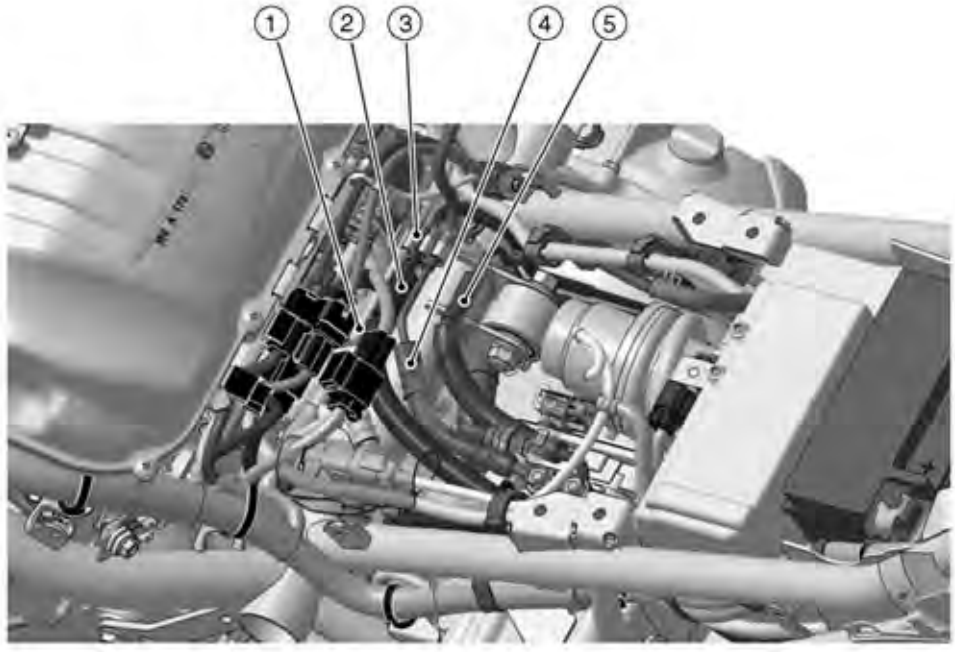

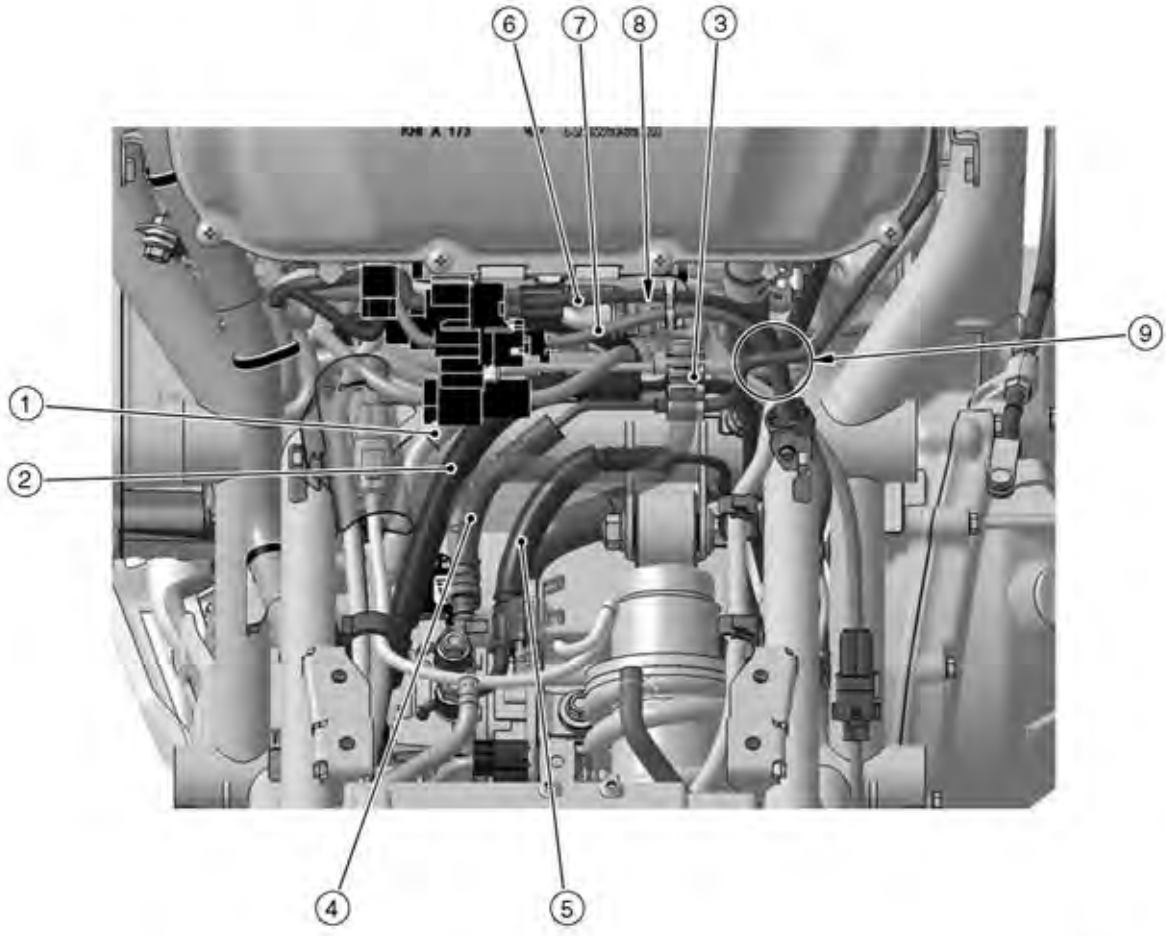

GB09117F 0

Cable, Wire, and Hose Routing

1. Front Brake Pipe (Front Master Cylinder ~ ABS Hydraulic Unit)
2. Rear Brake Pipe (ABS Hydraulic Unit ~ Rear Master Cylinder)
3. Clamp (Hold the brake pipes.)
4. Front Brake Pipe (ABS Hydraulic Unit ~ Front Caliper)
5. Rear Brake Pipe (ABS Hydraulic Unit ~ Rear Caliper)
6. Crankshaft Sensor Lead
7. Oxygen Sensor Lead
8. Rear Wheel Rotation Sensor Lead
9. Run the oxygen sensor lead, rear wheel rotation sensor lead and crankshaft sensor lead between the brake pipes.

Cable, Wire, and Hose Routing

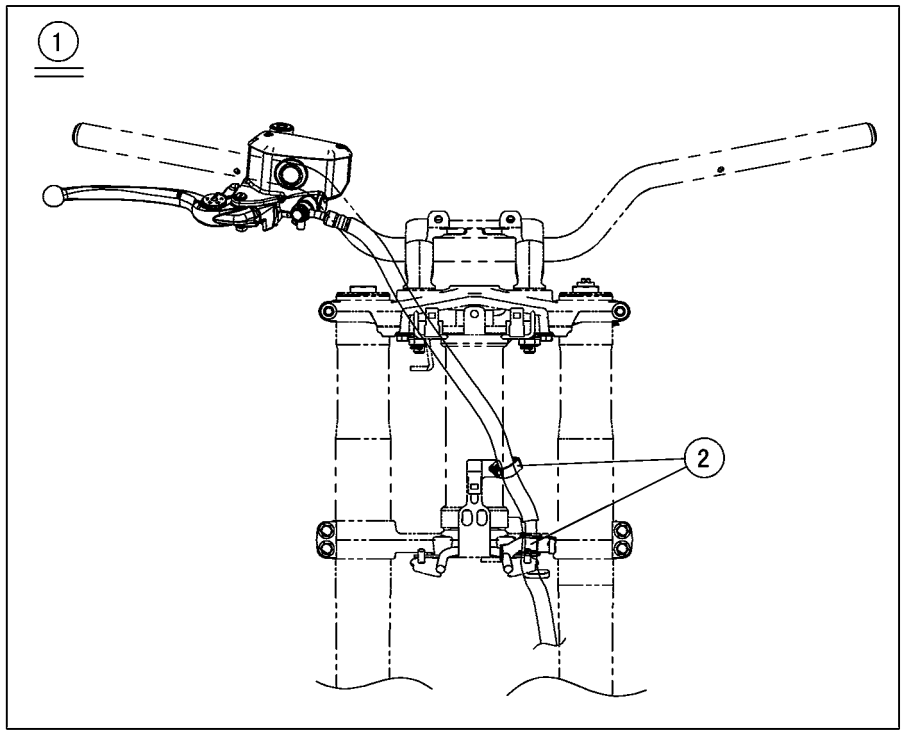

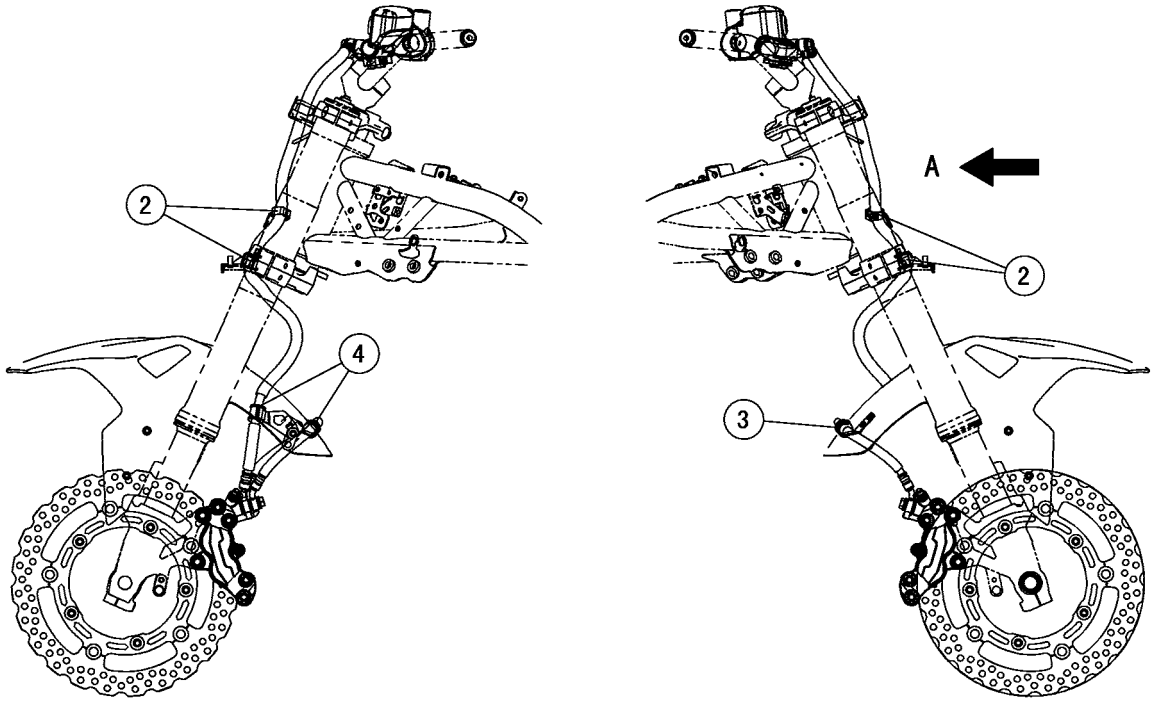

GB09118FW5 C

Cable, Wire, and Hose Routing

1. Viewed from A
2. Clamps (Hold the front brake hose.)
3. Clamp (Hold the front brake hose.)
4. Clamps (Hold the front brake hose.)

Cable, Wire, and Hose Routing

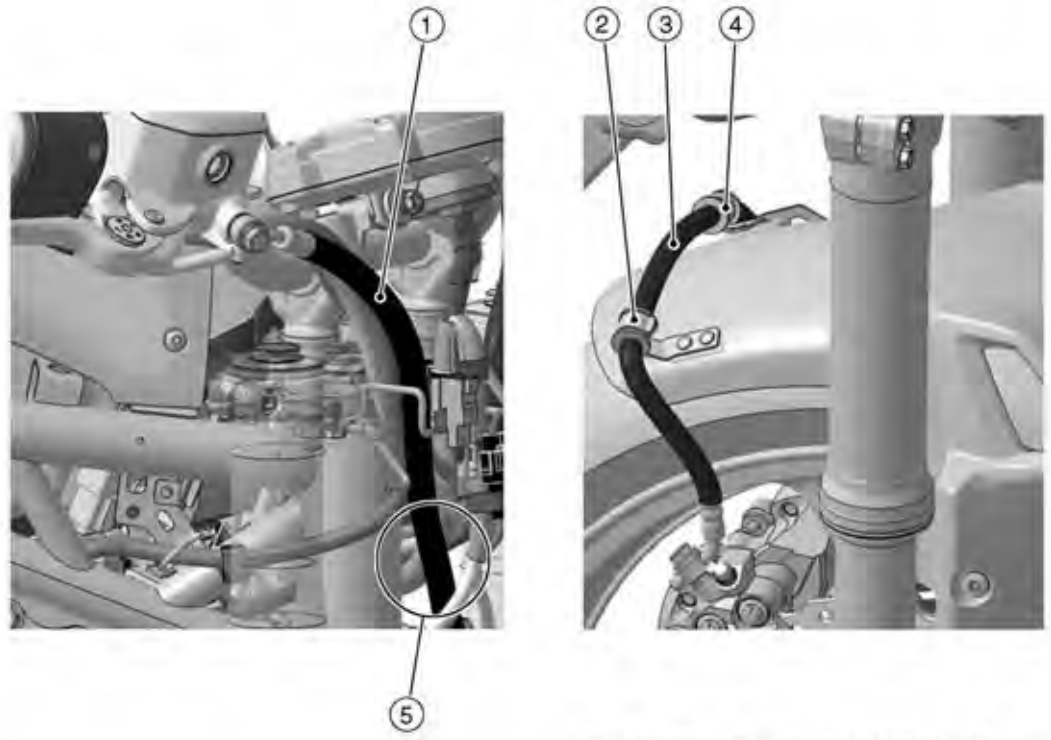

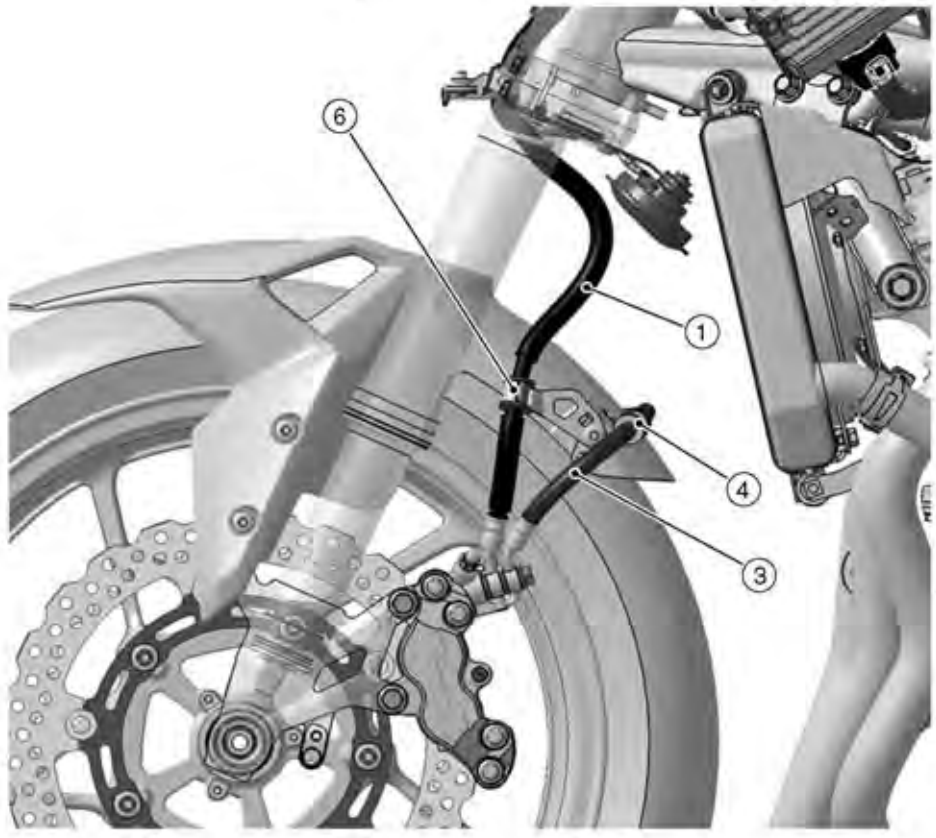

GB09119F

Cable, Wire, and Hose Routing

1. Front Brake Hose (Front Master Cylinder ~ Left Front Caliper)
2. Clamp (Hold the front brake hose.)
3. Front Brake Hose (Left Front Caliper ~ Right Front Caliper)
4. Clamp (Hold the front brake hose.)
5. Run the front brake hose between the main harness and left switch housing lead.
6. Clamp (Hold the front brake hose.)

Cable, Wire, and Hose Routing

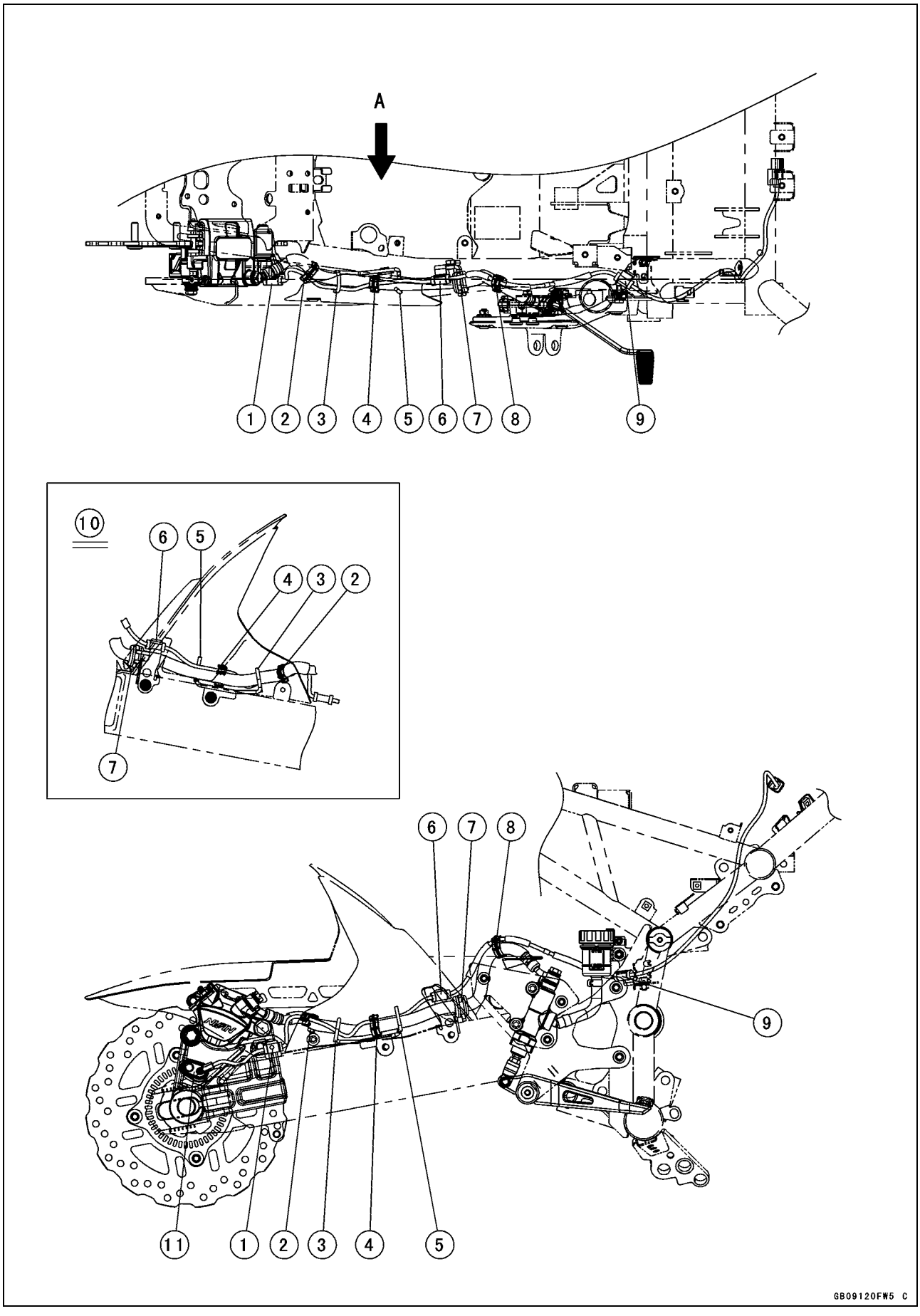

Cable, Wire, and Hose Routing

1. Clamp (Hold the rear wheel rotation sensor lead.)
2. Clamp (Hold the rear wheel rotation sensor lead and rear brake hose.)
3. Run the rear wheel rotation sensor lead and rear brake hose into the guide.
4. Clamp (Hold the rear wheel rotation sensor lead and rear brake hose.)
5. Run the rear wheel rotation sensor lead and rear brake hose into the guide.
6. Clamp (Hold the rear wheel rotation sensor lead.)
7. Clamp (Hold the rear brake hose.)
8. Clamp (Hold the rear wheel rotation sensor lead and rear brake hose.)
9. Clamp (Hold the rear wheel rotation sensor lead.)
10. Viewed from A
11. Rear Wheel Rotation Sensor

Cable, Wire, and Hose Routing

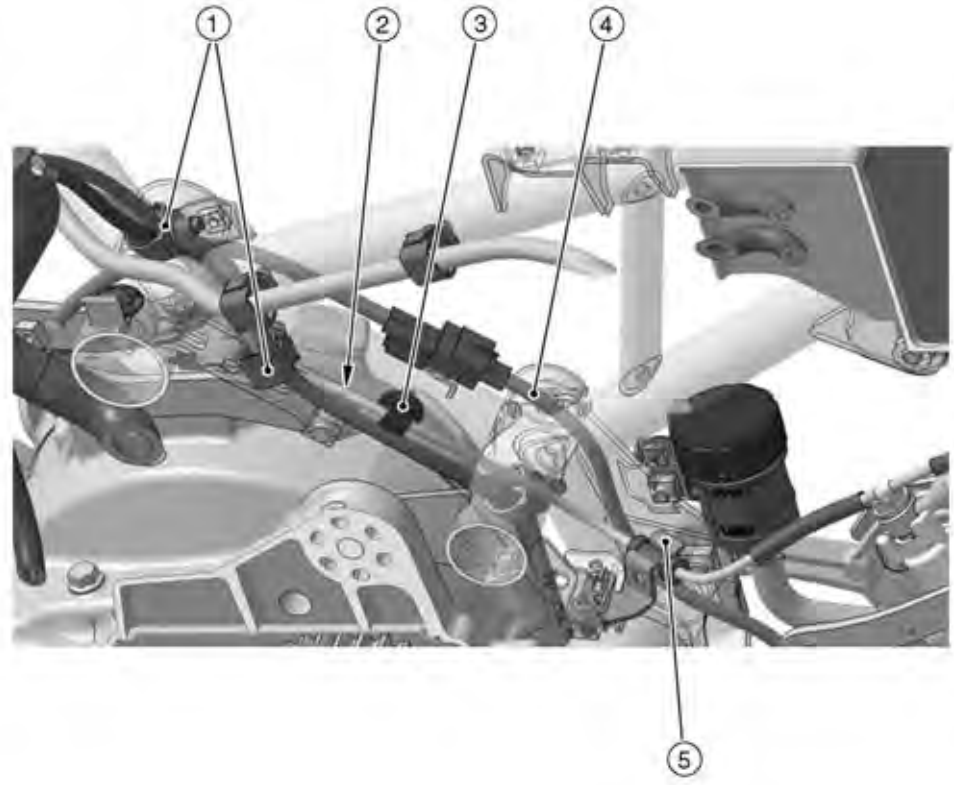

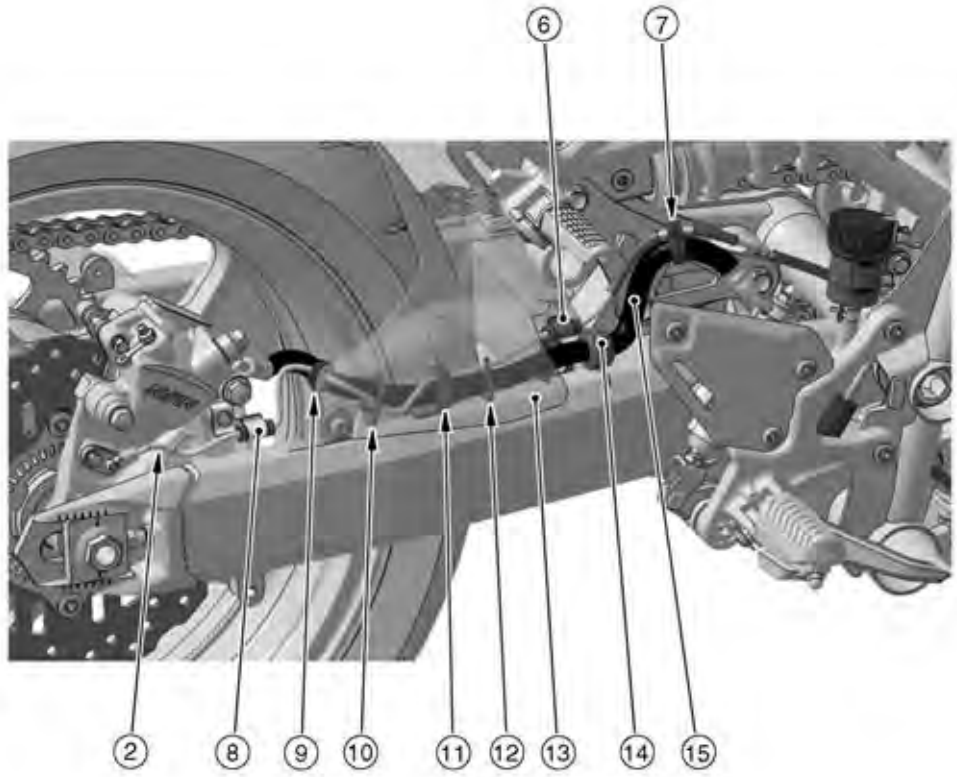

GB09121F

Cable, Wire, and Hose Routing

1. Clamps (Hold the oxygen sensor lead, crankshaft sensor lead and rear wheel rotation sensor lead.)
2. Rear Wheel Rotation Sensor Lead
3. Clamp (Hold the rear wheel rotation sensor lead.)
4. Rear Brake Light Switch Lead
5. Clamp (Hold the rear wheel rotation sensor lead.)
6. Clamp (Hold the rear wheel rotation sensor lead.)
7. Clamp (Hold the rear brake hose and rear wheel rotation sensor lead at the white paint of the sensor lead. Position the clamp so that the open side faces leftward.)
8. Clamp (Hold the rear wheel rotation sensor lead.)
9. Clamp (Hold the rear brake hose and rear wheel rotation sensor lead at the white paint of the sensor lead. Position the clamp so that the open side faces downward.)
10. Run the rear wheel rotation sensor lead and rear brake hose into the guide.
11. Clamp (Hold the rear brake hose and rear wheel rotation sensor lead at the white paint of the sensor lead. Position the clamp so that the open side faces leftward.)
12. Run the rear wheel rotation sensor lead and rear brake hose into the guide.
13. Mud Guard
14. Clamp (Hold the rear brake hose.)
15. Rear Brake Hose

Cable, Wire, and Hose Routing

ABS Equipped Models

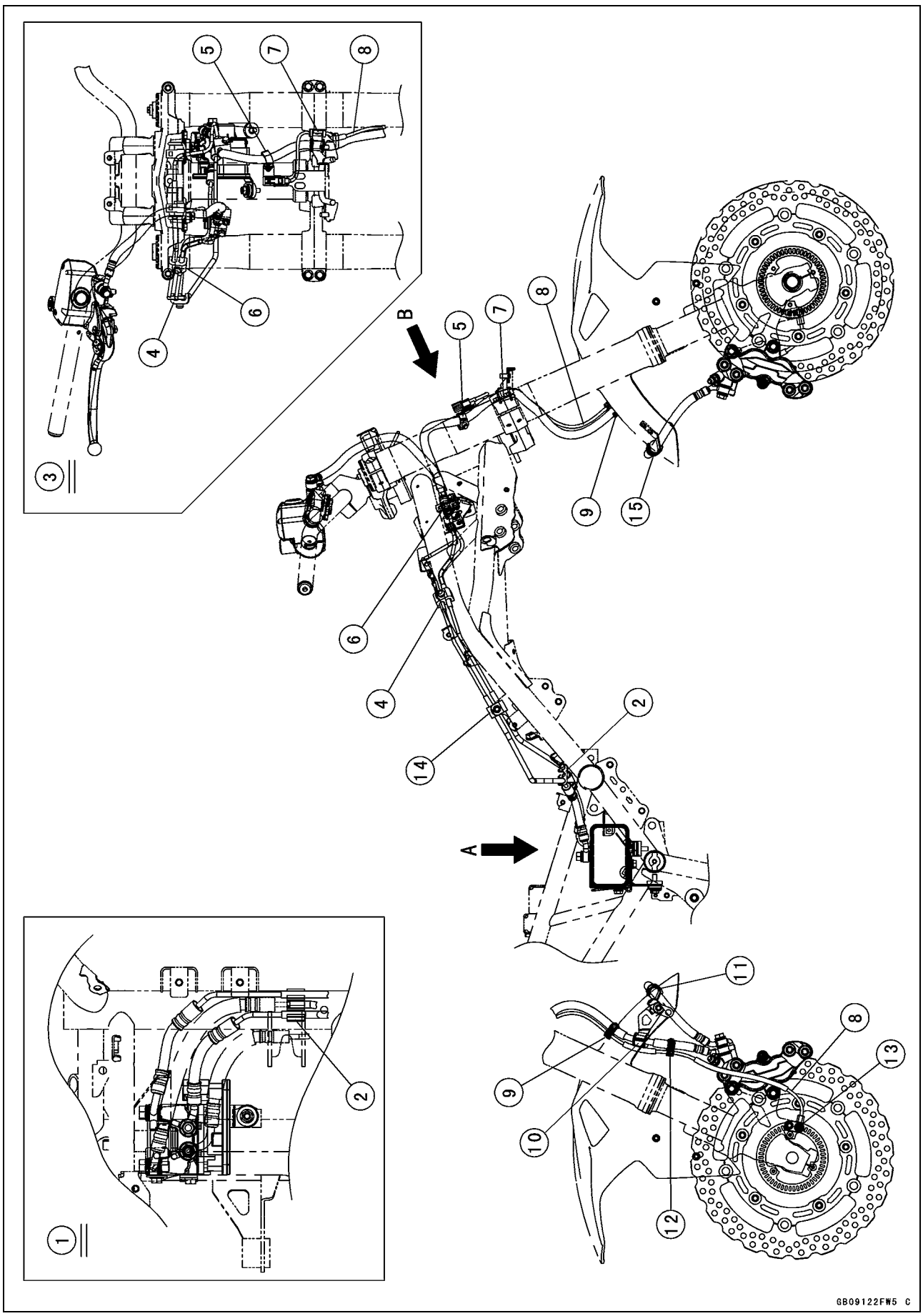

Cable, Wire, and Hose Routing

1. Viewed from A
2. Clamp (Hold the front brake pipes.)
3. Viewed from B
4. Clamp (Hold the front brake pipes.)
5. Clamp (Hold the front brake hose.)
6. Clamp (Hold the front brake pipes.)
7. Clamp (Hold the front brake hose and front wheel rotation sensor lead.)
8. Front Wheel Rotation Sensor Lead
9. Clamp (Hold the front brake hose and front wheel rotation sensor lead.)
10. Clamp (Hold the front brake hose.)
11. Clamp (Hold the front brake hose.)
12. Clamp (Hold the front brake hose and front wheel rotation sensor lead.)
13. Front Wheel Rotation Sensor
14. Clamp (Hold the front brake pipes.)
15. Clamp (Hold the front brake hose.)

Cable, Wire, and Hose Routing

ABS Equipped Models

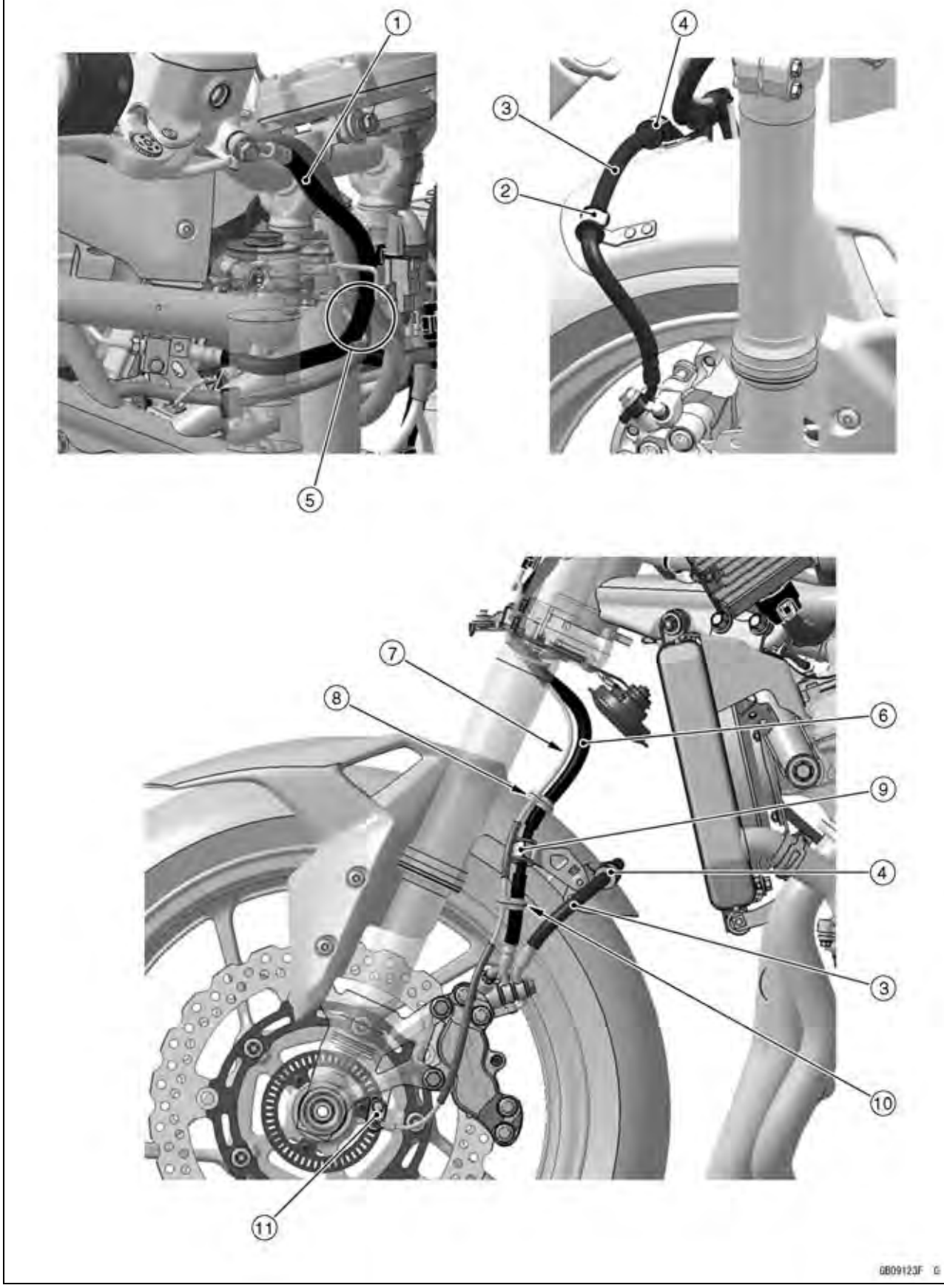

Cable, Wire, and Hose Routing

1. Front Brake Hose (Front Master Cylinder ~ ABS Hydraulic Unit)
2. Clamp (Hold the front brake hose.)
3. Front Brake Hose (Left Front Caliper ~ Right Front Caliper)
4. Clamp (Hold the front brake hose.)
5. Run the front brake hose to the outside of the right switch housing lead.
6. Front Brake Hose (Left Front Caliper ~ ABS Hydraulic Unit)
7. Front Wheel Rotation Sensor Lead
8. Clamp (Hold the front brake hose and front wheel rotation sensor lead at the white paint of the sensor lead. Position the clamp so that the open side faces rightward.)
9. Clamp (Hold the front brake hose.)
10. Clamp (Hold the front brake hose and front wheel rotation sensor lead at the white paint of the sensor lead. Position the clamp so that the open side faces rightward.)
11. Front Wheel Rotation Sensor

Cable, Wire, and Hose Routing

ABS Equipped Models

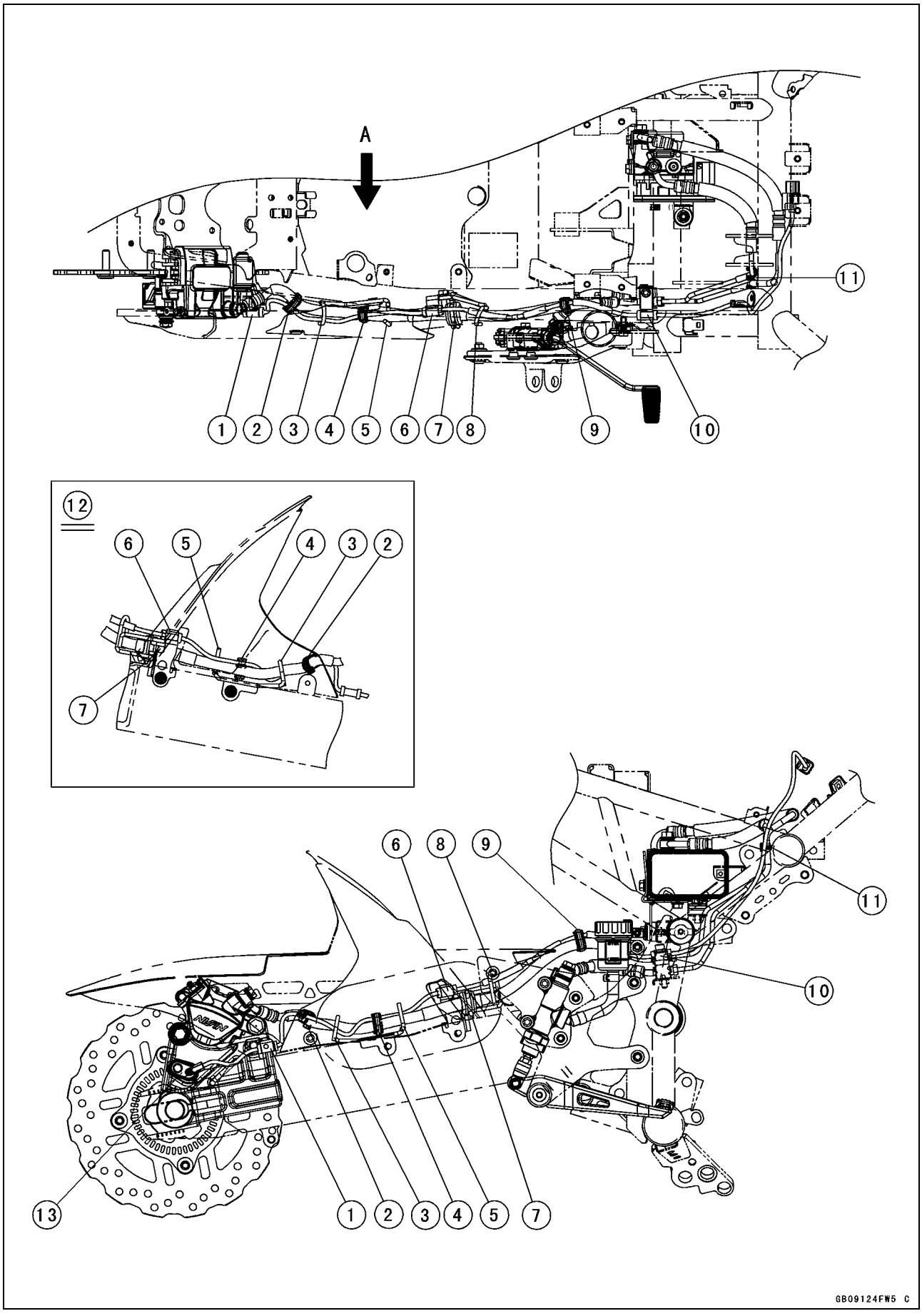

Cable, Wire, and Hose Routing

1. Clamp (Hold the rear wheel rotation sensor lead.)
2. Clamp (Hold the rear wheel rotation sensor lead and rear brake hose.)
3. Run the rear wheel rotation sensor lead and rear brake hose into the guide.
4. Clamp (Hold the rear wheel rotation sensor lead and rear brake hose.)
5. Run the rear wheel rotation sensor lead and rear brake hose into the guide.
6. Clamp (Hold the rear wheel rotation sensor lead.)
7. Clamp (Hold the rear brake hose.)
8. Run the rear wheel rotation sensor lead and rear brake hose into the guide.
9. Clamp (Hold the rear wheel rotation sensor lead and rear brake hose.)
10. Clamp (Hold the rear wheel rotation sensor lead.)
11. Clamp (Hold the rear brake pipes.)
12. Viewed from A
13. Rear Wheel Rotation Sensor

Cable, Wire, and Hose Routing

ABS Equipped Models

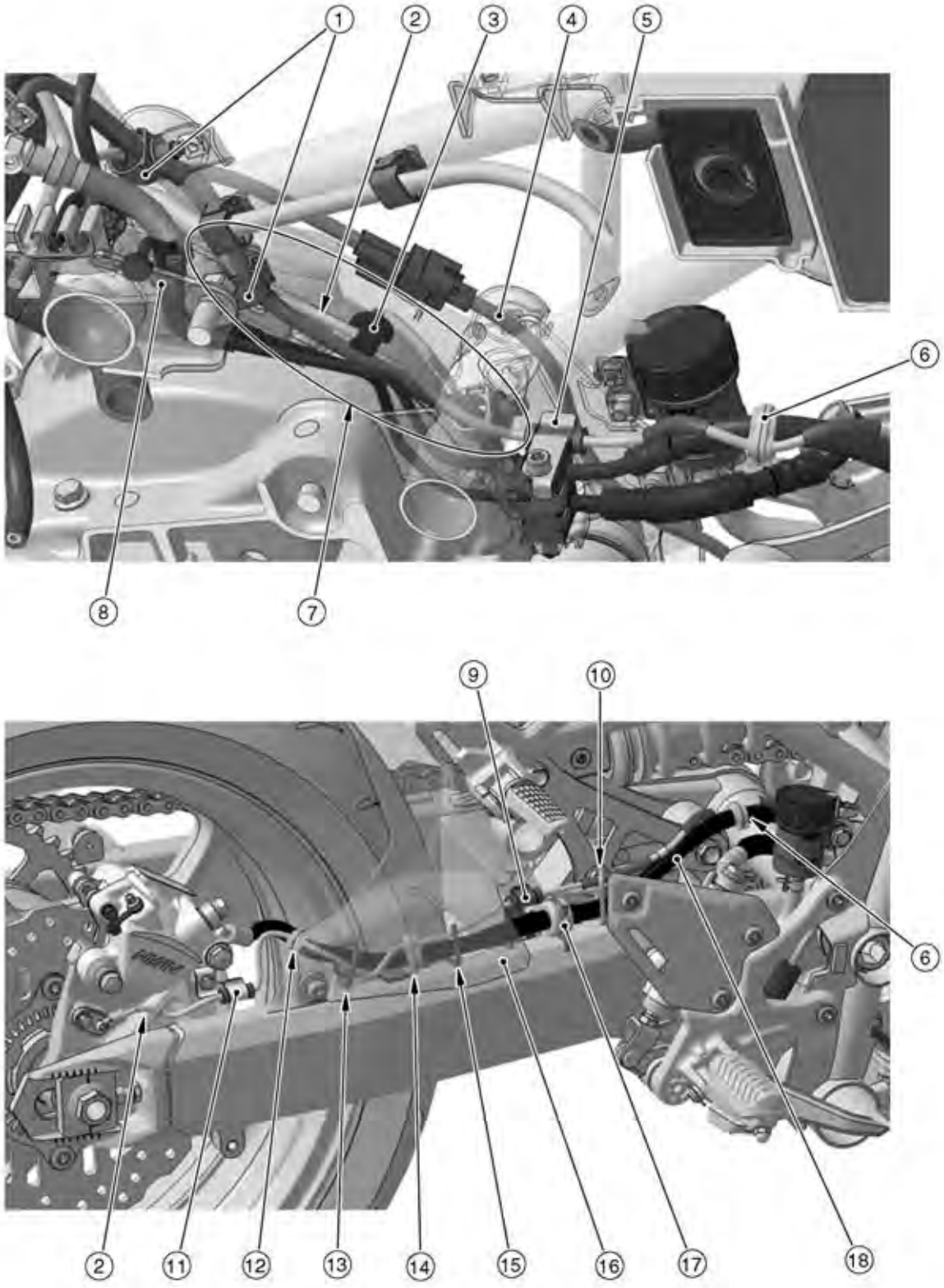

Cable, Wire, and Hose Routing

1. Clamps (Hold the oxygen sensor lead, crankshaft sensor lead and rear wheel rotation sensor lead.)
2. Rear Wheel Rotation Sensor Lead
3. Clamp (Hold the rear wheel rotation sensor lead.)
4. Rear Brake Light Switch Lead
5. Clamp (Hold the rear wheel rotation sensor lead.)
6. Clamp (Hold the rear brake hose and rear wheel rotation sensor lead at the white paint of the sensor lead. Position the clamp so that the open side faces downward.)
7. This area of the rear wheel rotation sensor lead to avoid slack.
8. Clamp (Hold the rear brake pipes.)
9. Clamp (Hold the rear wheel rotation sensor lead.)
10. Run the rear wheel rotation sensor lead and rear brake hose into the guide.
11. Clamp (Hold the rear wheel rotation sensor lead.)
12. Clamp (Hold the rear brake hose and rear wheel rotation sensor lead at the white paint of the sensor lead. Position the clamp so that the open side faces downward.)
13. Run the rear wheel rotation sensor lead and rear brake hose into the guide.
14. Clamp (Hold the rear brake hose and rear wheel rotation sensor lead at the white paint of the sensor lead. Position the clamp so that the open side faces leftward.)
15. Run the rear wheel rotation sensor lead and rear brake hose into the guide.
16. Mud Guard
17. Clamp (Hold the rear brake hose.)
18. Rear Brake Hose

Cable, Wire, and Hose Routing

Evaporative Emission Control System Equipped Models

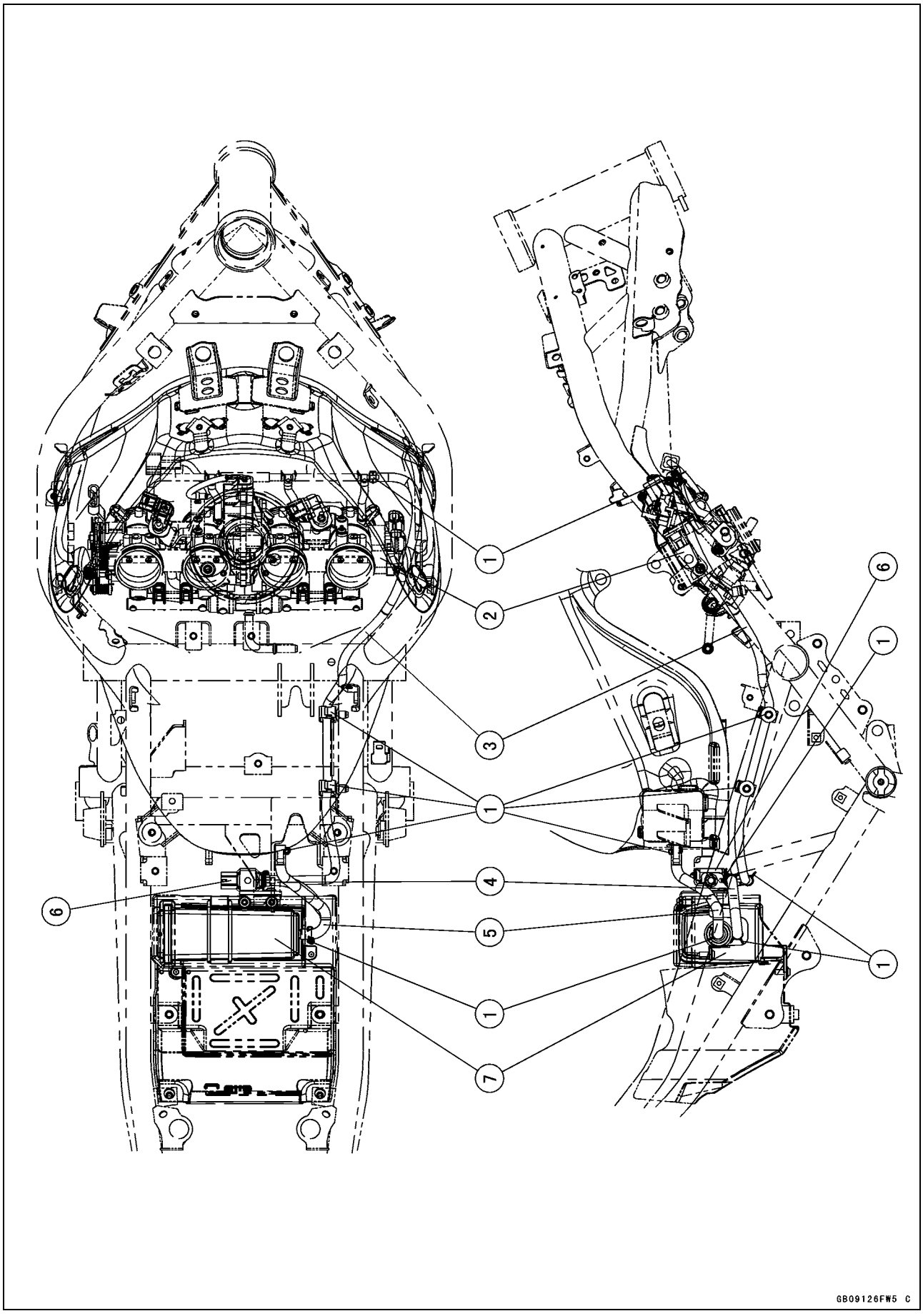

Cable, Wire, and Hose Routing

1. Clamps
2. Throttle Body Assy
3. Purge Hose (Green Paint) (Purge Valve ~ Throttle Body Assy)
4. Purge Hose (Green Paint) (Canister ~ Purge Valve)
5. Fuel Tank Breather Hose (Blue Paint) (Fuel Tank ~ Canister)
6. Purge Valve
7. Canister

Cable, Wire, and Hose Routing

Evaporative Emission Control System Equipped Models

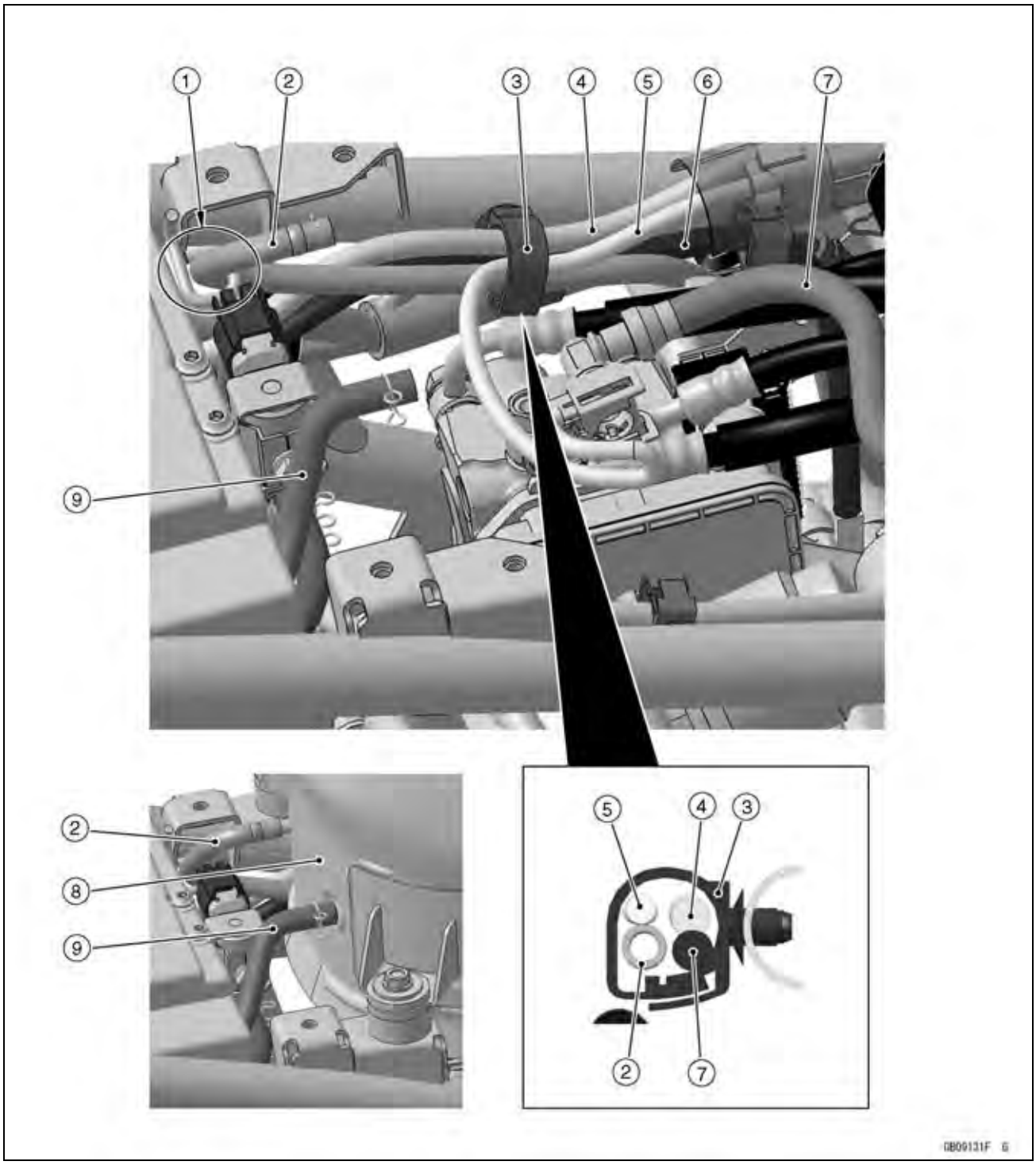

1. Run the fuel tank drain hose through the clamp.
2. Fuel Tank Drain Hose
3. Clamp (Hold the fuel pump lead, starter motor cable, battery negative (–) cable and fuel tank drain hose.)
4. Starter Motor Cable
5. Fuel Pump Lead
6. Battery Negative (–) Cable
7. Fuel Hose
8. Fuel Tank
9. Fuel Tank Breather Hose (Fuel Tank ~ Canister)

Cable, Wire, and Hose Routing

Evaporative Emission Control System Equipped Models

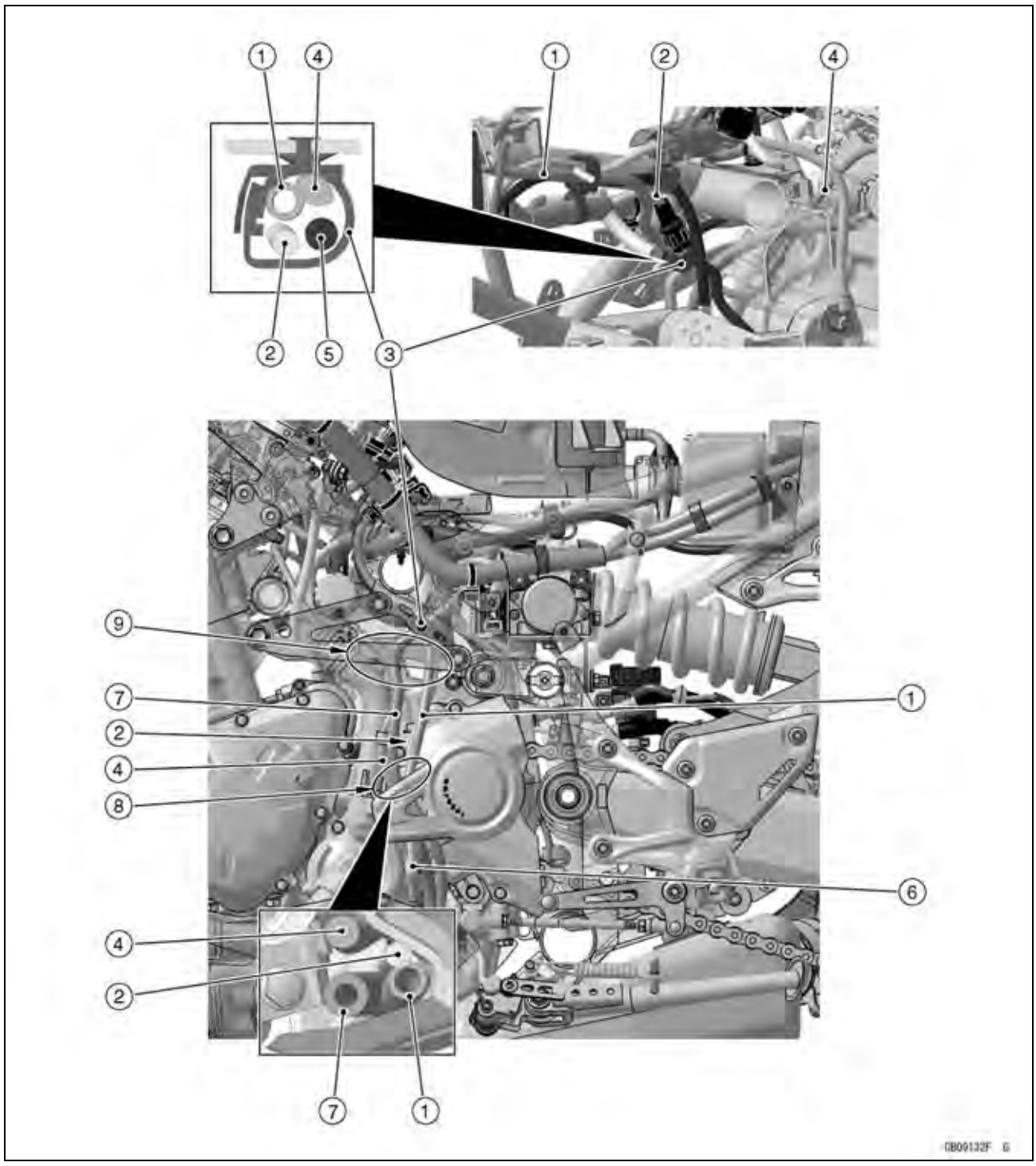

1. Fuel Tank Drain Hose
2. Side Stand Switch Lead
3. Clamp (Hold the engine subharness, side stand switch lead, fuel tank drain hose and alternator lead.)
4. Engine Subharness
5. Alternator Lead
6. Clamp (Hold the engine subharness and side stand switch lead.)
7. Reserve Tank Overflow Hose
8. Run the side stand switch lead, engine subharness, fuel tank drain hose and reserve tank overflow hose to the inside of the engine sprocket cover.
9. Run the side stand switch and engine subharness to inside of the fuel tank drain hose and reserve thank overflow hose. Do not touch the harness to the bracket.

Troubleshooting Guide

NOTE

○*Refer to the Fuel System chapter for most of DFI trouble shooting guide.*

○*This is not an exhaustive list, giving every possible cause for each problem listed. It is meant simply as a rough guide to assist the troubleshooting for some of the more common difficulties.*

Engine Doesn't Start, Starting Difficulty:

Starter motor not rotating:
- Ignition and engine stop switch not on
- Starter lockout switch or gear position sensor trouble
- Starter motor trouble
- Battery voltage low
- Starter relay not contacting or operating
- Starter button not contacting
- Starter system wiring shorted or open
- Ignition switch trouble
- Engine stop switch trouble
- Main 30 A or ignition fuse blown

Starter motor rotating but engine doesn't turn over:
- Vehicle-down sensor (DFI) coming off
- Immobilizer system trouble (Equipped Models)
- Starter clutch trouble
- Starter idle gear trouble

Engine won't turn over:
- Valve seizure
- Valve lifter seizure
- Cylinder, piston seizure
- Crankshaft seizure
- Connecting rod small end seizure
- Connecting rod big end seizure
- Transmission gear or bearing seizure
- Camshaft seizure
- Starter idle gear seizure
- Balancer bearing seizure

No fuel flow:
- No fuel in tank
- Fuel pump trouble
- Fuel tank air vent obstructed
- Fuel filter clogged
- Fuel line clogged

No spark; spark weak:
- Vehicle-down sensor (DFI) coming off
- Ignition switch not on
- Engine stop switch turned to stop position
- Clutch lever not pulled in or gear not in neutral
- Battery voltage low
- Immobilizer system trouble (Equipped Models)
- Spark plug dirty, broken, or gap maladjusted
- Spark plug incorrect
- Stick coil shorted or not in good contact
- Stick coil trouble
- ECU trouble
- Gear position sensor, starter lockout switch, or side stand switch trouble
- Crankshaft sensor trouble
- Ignition switch or engine stop switch shorted
- Starter system wiring shorted or open
- Main 30 A or ignition fuse blown

Fuel/air mixture incorrect:
- Bypass screw maladjusted
- Air passage clogged
- Air cleaner clogged, poorly sealed, or missing
- Leak from oil filler plug, crankcase breather hose or air cleaner drain hose.

Compression Low:
- Spark plug loose
- Cylinder head not sufficiently tightened down
- Cylinder, piston worn
- Piston ring bad (worn, weak, broken, or sticking)
- Piston ring/groove clearance excessive
- Cylinder head gasket damaged
- Cylinder head warped
- Valve spring broken or weak
- No valve clearance
- Valve not seating properly (valve bent, worn, or carbon accumulation on the seating surface)

Poor Running at Low Speed:

Spark weak:
- Battery voltage low
- Immobilizer system trouble (Equipped Models)
- Stick coil trouble
- Stick coil shorted or not in good contact
- Spark plug dirty, broken, or maladjusted
- Spark plug incorrect
- ECU trouble
- Crankshaft sensor trouble

Fuel/air mixture incorrect:
- Bypass screw maladjusted
- Air passage clogged
- Air bleed pipe bleed holes clogged
- Pilot passage clogged
- Air cleaner clogged, poorly sealed, or missing
- Fuel tank air vent obstructed
- Fuel pump trouble
- Fuel to injector insufficient

Fuel line clogged
Throttle body assy holder loose
Air cleaner housing holder loose

Compression low:
Spark plug loose
Cylinder head not sufficiently tightened down
No valve clearance
Cylinder, piston worn
Piston ring bad (worn, weak, broken, or sticking)
Piston ring/groove clearance excessive
Cylinder head gasket damaged
Cylinder head warped
Valve spring broken or weak
Valve not seating properly (valve bent, worn, or carbon accumulation on the seating surface)
Camshaft cam worn

Run-on (dieseling):
Ignition switch trouble
Engine stop switch trouble
Fuel injector trouble
Carbon accumulating on valve seating surface
Engine overheating

Other:
ECU trouble
Throttle body assy not synchronizing
Engine oil viscosity too high
Drive train trouble
Brake dragging
Clutch slipping
Engine overheating
Air suction valve trouble
Air switching valve trouble

Poor Running or No Power at High Speed:

Firing incorrect:
Spark plug dirty, broken, or maladjusted
Spark plug incorrect
Stick coil shorted or not in good contact
Stick coil trouble
ECU trouble

Fuel/air mixture incorrect:
Air cleaner clogged, poorly sealed, or missing
Throttle body assy holder loose
Air cleaner housing holder loose
Water or foreign matter in fuel
Fuel to injector insufficient
Fuel tank air vent obstructed
Fuel line clogged
Fuel pump trouble

Compression low:
Spark plug loose
Cylinder head not sufficiently tightened down
No valve clearance
Cylinder, piston worn
Piston ring bad (worn, weak, broken, or sticking)
Piston ring/groove clearance excessive
Cylinder head gasket damaged
Cylinder head warped
Valve spring broken or weak
Valve not seating properly (valve bent, worn, or carbon accumulation on the seating surface.)

Knocking:
Carbon built up in combustion chamber
Fuel poor quality or incorrect
Spark plug incorrect
ECU trouble

Miscellaneous:
Throttle valve won't fully open
Brake dragging
Clutch slipping
Engine overheating
Engine oil level too high
Engine oil viscosity too high
Drive train trouble
Camshaft cam worn
Air suction valve trouble
Air switching valve trouble
Catalytic converter melt down due to muffler overheating (KLEEN)

Overheating:

Firing incorrect:
Spark plug dirty, broken, or maladjusted
Spark plug incorrect
ECU trouble

Muffler overheating:
For KLEEN, do not run the engine even if with only one cylinder misfiring or poor running (Request the nearest service facility to correct it)
For KLEEN, do not push-start with a dead battery (Connect another full-charged battery with jumper cables, and start the engine using the electric starter)
For KLEEN, do not start the engine under misfire due to spark plug fouling or poor connection of the stick coil
For KLEEN, do not coast the motorcycle with the ignition switch off (Turn the ignition switch on and run the engine)
ECU trouble

Fuel/air mixture incorrect:
Throttle body assy holder loose
Air cleaner housing holder loose
Air cleaner poorly sealed, or missing

Troubleshooting Guide

Air cleaner clogged
Compression high:
Carbon built up in combustion chamber
Engine load faulty:
Brake dragging
Clutch slipping
Engine oil level too high
Engine oil viscosity too high
Drive train trouble
Lubrication inadequate:
Engine oil level too low
Engine oil poor quality or incorrect
Oil cooler incorrect (Equipped Models):
Oil cooler clogged
Water temperature meter incorrect:
Water temperature meter broken
Water temperature sensor broken
Coolant incorrect:
Coolant level too low
Coolant deteriorated
Wrong coolant mixed ratio
Cooling system component incorrect:
Radiator fin damaged
Radiator clogged
Thermostat trouble
Radiator cap trouble
Radiator fan relay trouble
Fan motor broken
Fan blade damaged
Water pump not turning
Water pump impeller damaged

Over Cooling:

Water temperature meter incorrect:
Water temperature meter broken
Water temperature sensor broken
Cooling system component incorrect:
Thermostat trouble

Clutch Operation Faulty:

Clutch slipping:
Friction plate worn or warped
Steel plate worn or warped
Clutch spring broken or weak
Clutch hub or housing unevenly worn
No clutch lever play
Clutch inner cable trouble
Clutch release mechanism trouble
Clutch not disengaging properly:
Clutch plate warped or too rough
Clutch spring compression uneven
Engine oil deteriorated
Engine oil viscosity too high
Engine oil level too high
Clutch housing frozen on drive shaft
Clutch hub nut loose
Sub clutch hub spline damaged
Clutch friction plate installed wrong
Clutch lever play excessive
Clutch release mechanism trouble

Gear Shifting Faulty:

Doesn't go into gear; shift pedal doesn't return:
Clutch not disengaging
Shift fork bent or seized
Gear stuck on the shaft
Gear positioning lever binding
Shift return spring weak or broken
Shift return spring pin loose
Shift ratchet assembly spring broken
Shift ratchet assembly broken
Shift pawl broken
Jumps out of gear:
Shift fork ear worn, bent
Gear groove worn
Gear dogs and/or dog holes worn
Shift drum groove worn
Gear positioning lever spring weak or broken
Shift fork guide pin worn
Drive shaft, output shaft, and/or gear splines worn
Overshifts:
Gear positioning lever spring weak or broken
Shift ratchet assembly spring weak or broken

Abnormal Engine Noise:

Knocking:
ECU trouble
Carbon built up in combustion chamber
Fuel poor quality or incorrect
Spark plug incorrect
Overheating
Piston slap:
Cylinder/piston clearance excessive
Cylinder, piston worn
Connecting rod bent
Piston pin, piston pin hole worn
Valve noise:
Valve clearance incorrect
Valve spring broken or weak
Camshaft bearing worn
Valve lifter worn
Other noise:
Connecting rod small end clearance excessive
Connecting rod big end clearance excessive
Piston ring/groove clearance excessive
Piston ring worn, broken, or stuck
Piston ring groove worn

Troubleshooting Guide

Piston seizure, damage
Cylinder head gasket leaking
Exhaust pipe leaking at cylinder head connection
Crankshaft runout excessive
Engine mount loose
Crankshaft bearing worn
Primary gear worn or chipped
Camshaft chain tensioner trouble
Camshaft chain, sprocket, guide worn
Air suction valve damaged
Air switching valve damaged
Alternator rotor loose
Catalytic converter melt down due to muffler overheating (KLEEN)
Balancer gear worn or chipped
Balancer shaft position maladjusted
Balancer bearing worn
Balancer rubber damper damaged

Abnormal Drive Train Noise:

Clutch noise:
Clutch damper weak or damaged
Clutch housing/friction plate clearance excessive
Clutch housing gear worn
Wrong installation of outside friction plate

Transmission noise:
Bearings worn
Transmission gear worn or chipped
Metal chips jammed in gear teeth
Engine oil insufficient

Drive line noise:
Drive chain adjusted improperly
Drive chain worn
Rear and/or engine sprocket worn
Chain lubrication insufficient
Rear wheel misaligned

Abnormal Frame Noise:

Front fork noise:
Oil insufficient or too thin
Spring weak or broken

Rear shock absorber noise:
Shock absorber damaged

Disc brake noise:
Pad installed incorrectly
Pad surface glazed
Disc warped
Caliper trouble

Other noise:
Bracket, nut, bolt, etc. not properly mounted or tightened

Warning Indicator Light (Oil Pressure Warning) Doesn't Go OFF:

Engine oil pump damaged
Engine oil screen clogged
Engine oil filter clogged
Engine oil level too low
Engine oil viscosity too low
Camshaft bearing worn
Crankshaft bearing worn
Oil pressure switch damaged
Wiring faulty
Relief valve stuck open
O-ring at the oil passage in the crankcase damaged

Exhaust Smokes Excessively:

White smoke:
Piston oil ring worn
Cylinder worn
Valve oil seal damaged
Valve guide worn
Engine oil level too high

Black smoke:
Air cleaner clogged

Brown smoke:
Air cleaner housing holder loose
Air cleaner poorly sealed or missing

Handling and/or Stability Unsatisfactory:

Handlebars hard to turn:
Cable routing incorrect
Hose routing incorrect
Wiring routing incorrect
Steering stem nut too tight
Steering stem bearing damaged
Steering stem bearing lubrication inadequate
Steering stem bent
Tire air pressure too low

Handlebars shakes or excessively vibrates:
Tire worn
Swingarm pivot bearing worn
Rim warped, or not balanced
Wheel bearing worn
Handlebar clamp bolt loose
Steering stem nut loose
Front, rear axle runout excessive
Engine mount loose

Handlebars pulls to one side:
Frame bent
Wheel misalignment
Swingarm bent or twisted
Swingarm pivot shaft runout excessive
Steering maladjusted
Front fork bent

Troubleshooting Guide

Shock absorption unsatisfactory:
(Too hard)
Front fork oil excessive
Front fork oil viscosity too high
Rear shock absorber adjustment too hard
Tire air pressure too high
Front fork bent
(Too soft)
Tire air pressure too low
Front fork oil insufficient and/or leaking
Front fork oil viscosity too low
Rear shock adjustment too soft
Front fork, rear shock absorber spring weak
Rear shock absorber oil leaking

Brake Doesn't Hold:

Air in the brake line
Pad or disc worn
Brake fluid leakage
Disc warped
Contaminated pad
Brake fluid deteriorated
Primary or secondary cup damaged in master cylinder
Master cylinder scratched inside

Battery Trouble:

Battery discharged:
Charge insufficient
Battery faulty (too low terminal voltage)
Battery cable making poor contact
Load excessive (e.g., bulb of excessive wattage)
Ignition switch trouble
Alternator trouble
Wiring faulty
Regulator/rectifier trouble

Battery overcharged:
Alternator trouble
Regulator/rectifier trouble
Battery faulty

ZR900A without Immobilizer Models

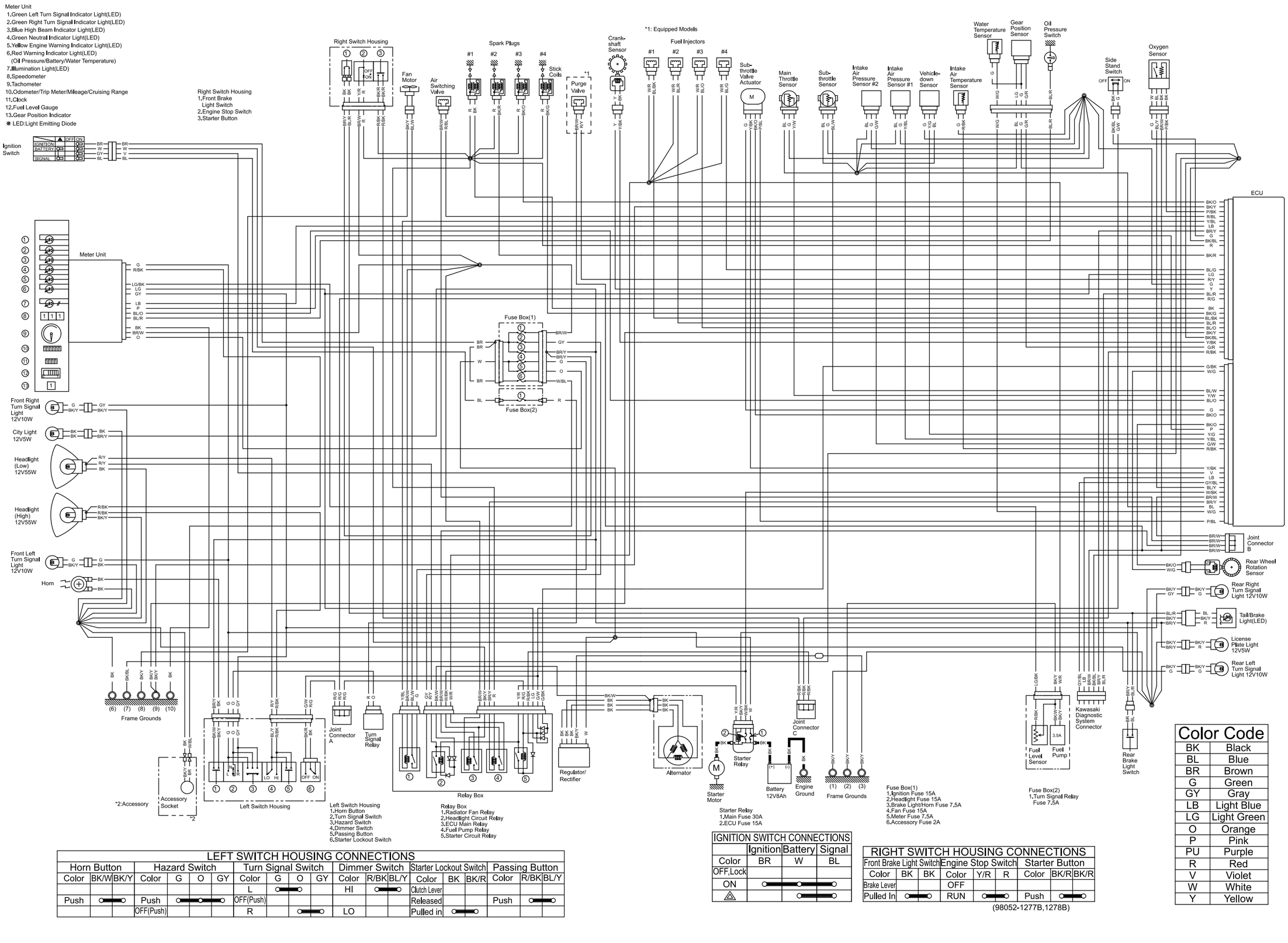

LEFT SWITCH HOUSING CONNECTIONS

Horn Button			Hazard Switch				Turn Signal Switch				Dimmer Switch			Starter Lockout Switch			Passing Button		
Color	BK/W	BK/Y	Color	G	O	GY	Color	G	O	GY	Color	R/BK	BL/Y	Color	BK	BK/R	Color	R/BK	BL/Y
							L		○		HI		○	Clutch Lever					
Push	○	○	Push	○	○	○	OFF(Push)							Released			Push	○	○
			OFF(Push)				R			○	LO			Pulled in	○	○			

IGNITION SWITCH CONNECTIONS

	Ignition	Battery	Signal
Color	BR	W	BL
OFF,Lock			
ON	○	○	○
△		○	○

RIGHT SWITCH HOUSING CONNECTIONS

Front Brake Light Switch			Engine Stop Switch			Starter Button		
Color	BK	BK	Color	Y/R	R	Color	BK/R	BK/R
Brake Lever			OFF					
Pulled In	○	○	RUN	○	○	Push	○	○

(98052-1277B,1278B)

Color Code

BK	Black
BL	Blue
BR	Brown
G	Green
GY	Gray
LB	Light Blue
LG	Light Green
O	Orange
P	Pink
PU	Purple
R	Red
V	Violet
W	White
Y	Yellow

ZR900A with Immobilizer Models

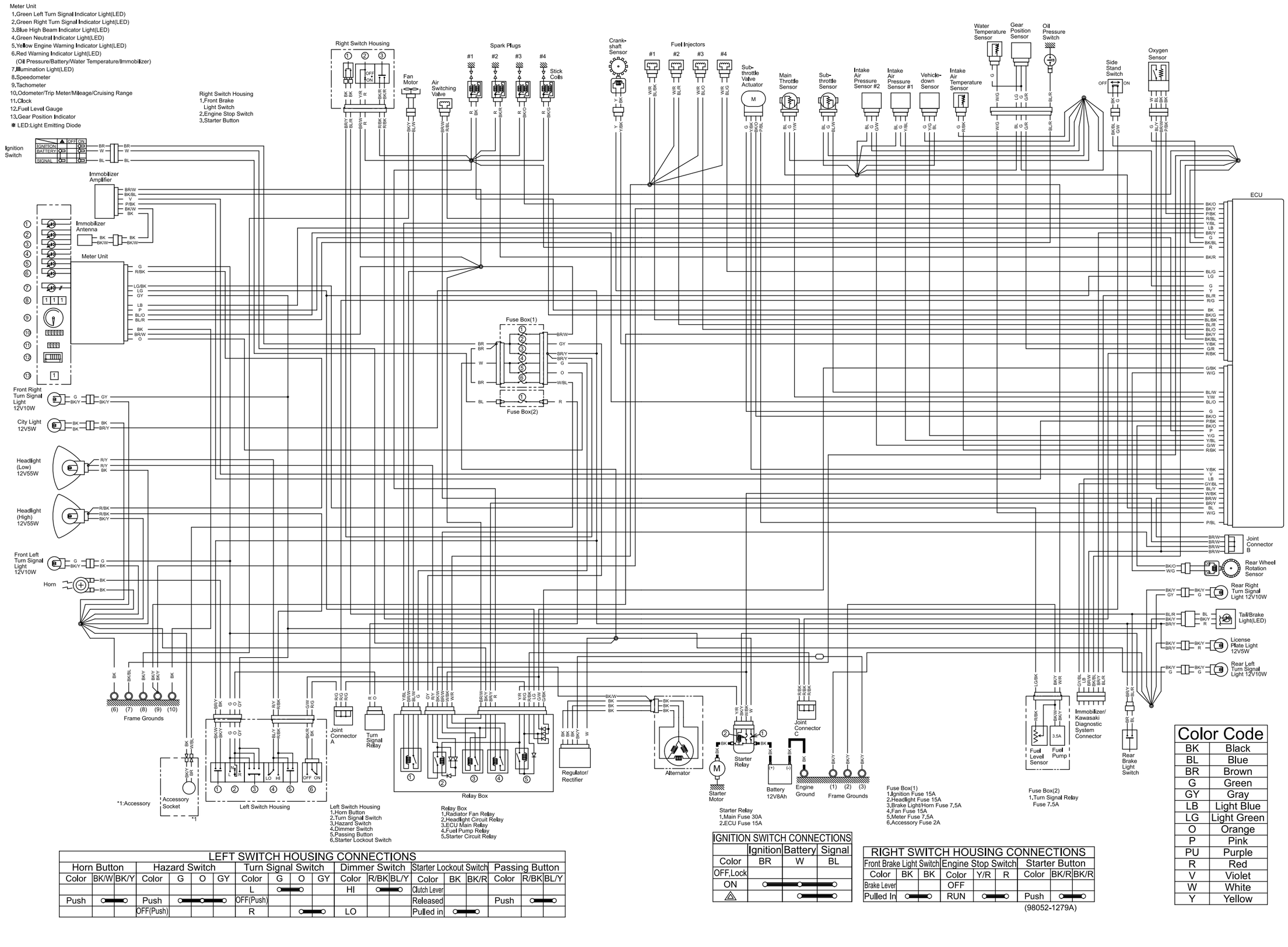

LEFT SWITCH HOUSING CONNECTIONS

Horn Button			Hazard Switch				Turn Signal Switch				Dimmer Switch			Starter Lockout Switch			Passing Button		
Color	BK/W	BK/Y	Color	G	O	GY	Color	G	O	GY	Color	R/BK	BL/Y	Color	BK	BK/R	Color	R/BK	BL/Y
							L	●			HI	●		Clutch Lever					
Push	●		Push	●	●		OFF(Push)							Released			Push	●	
			OFF(Push)				R		●		LO			Pulled in	●				

IGNITION SWITCH CONNECTIONS

	Ignition	Battery	Signal
Color	BR	W	BL
OFF,Lock			
ON	●	●	
⚠		●	

RIGHT SWITCH HOUSING CONNECTIONS

Front Brake Light Switch			Engine Stop Switch			Starter Button		
Color	BK	BK	Color	Y/R	R	Color	BK/R	BK/R
Brake Lever			OFF					
Pulled In	●		RUN	●		Push	●	

(98052-1279A)

Color Code

BK	Black
BL	Blue
BR	Brown
G	Green
GY	Gray
LB	Light Blue
LG	Light Green
O	Orange
P	Pink
PU	Purple
R	Red
V	Violet
W	White
Y	Yellow

ZR900B without Immobilizer Models

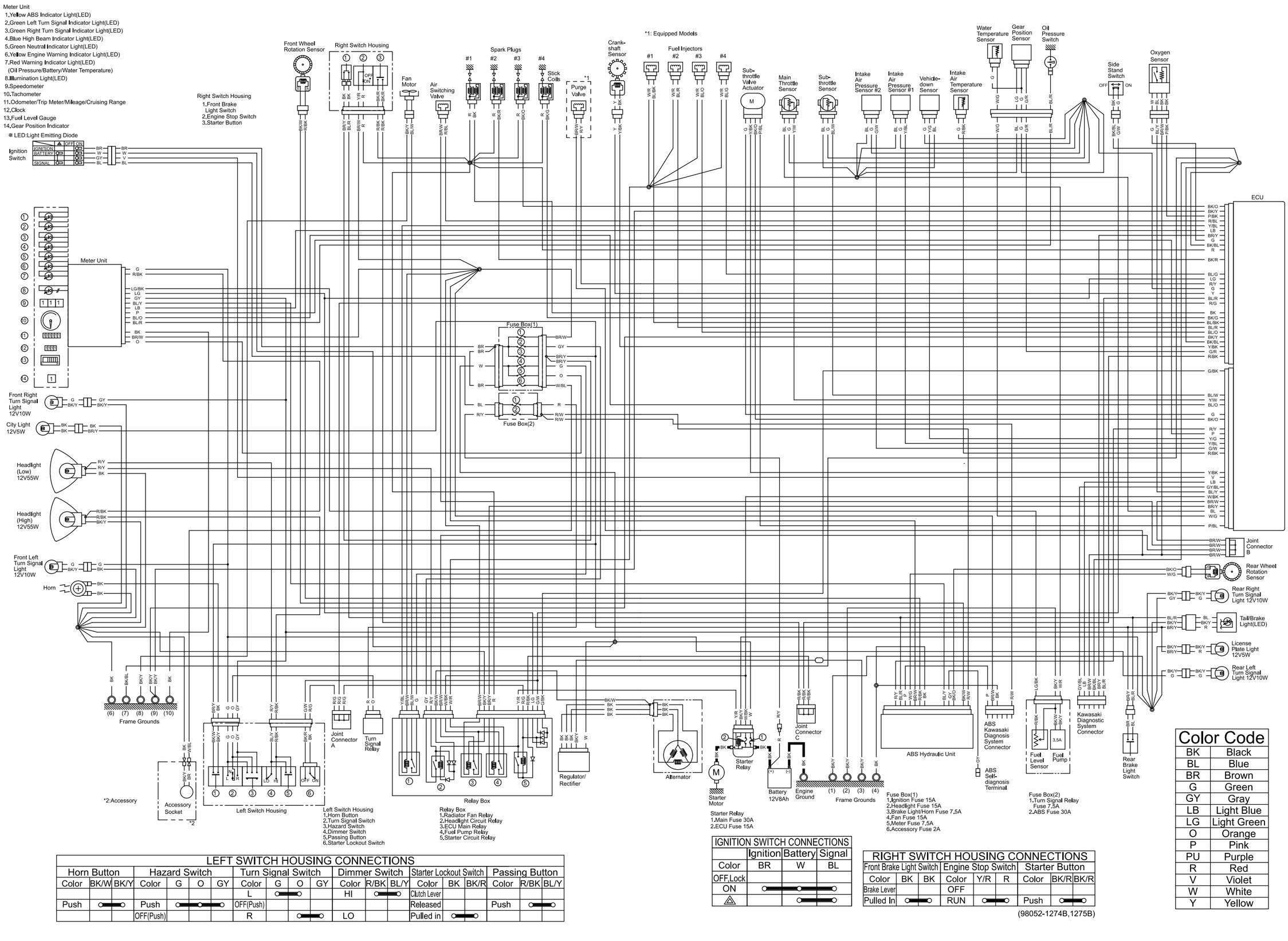

LEFT SWITCH HOUSING CONNECTIONS

Horn Button			Hazard Switch				Turn Signal Switch				Dimmer Switch			Starter Lockout Switch			Passing Button		
Color	BK/W	BK/Y	Color	G	O	GY	Color	G	O	GY	Color	R/BK	BL/Y	Color	BK	BK/R	Color	R/BK	BL/Y
							L	●			HI	●		Clutch Lever					
Push	●	●	Push	●	●	●	OFF(Push)							Released			Push	●	●
			OFF(Push)				R		●	●	LO			Pulled in	●	●			

IGNITION SWITCH CONNECTIONS

	Ignition	Battery	Signal
Color	BR	W	BL
OFF,Lock			
ON		●	●
⚠		●	

RIGHT SWITCH HOUSING CONNECTIONS

Front Brake Light Switch			Engine Stop Switch			Starter Button		
Color	BK	BK	Color	Y/R	R	Color	BK/R	BK/R
Brake Lever			OFF					
Pulled In	●	●	RUN	●	●	Push	●	●

(98052-1274B,1275B)

Color Code

BK	Black
BL	Blue
BR	Brown
G	Green
GY	Gray
LB	Light Blue
LG	Light Green
O	Orange
P	Pink
PU	Purple
R	Red
V	Violet
W	White
Y	Yellow

ZR900B with Immobilizer Models

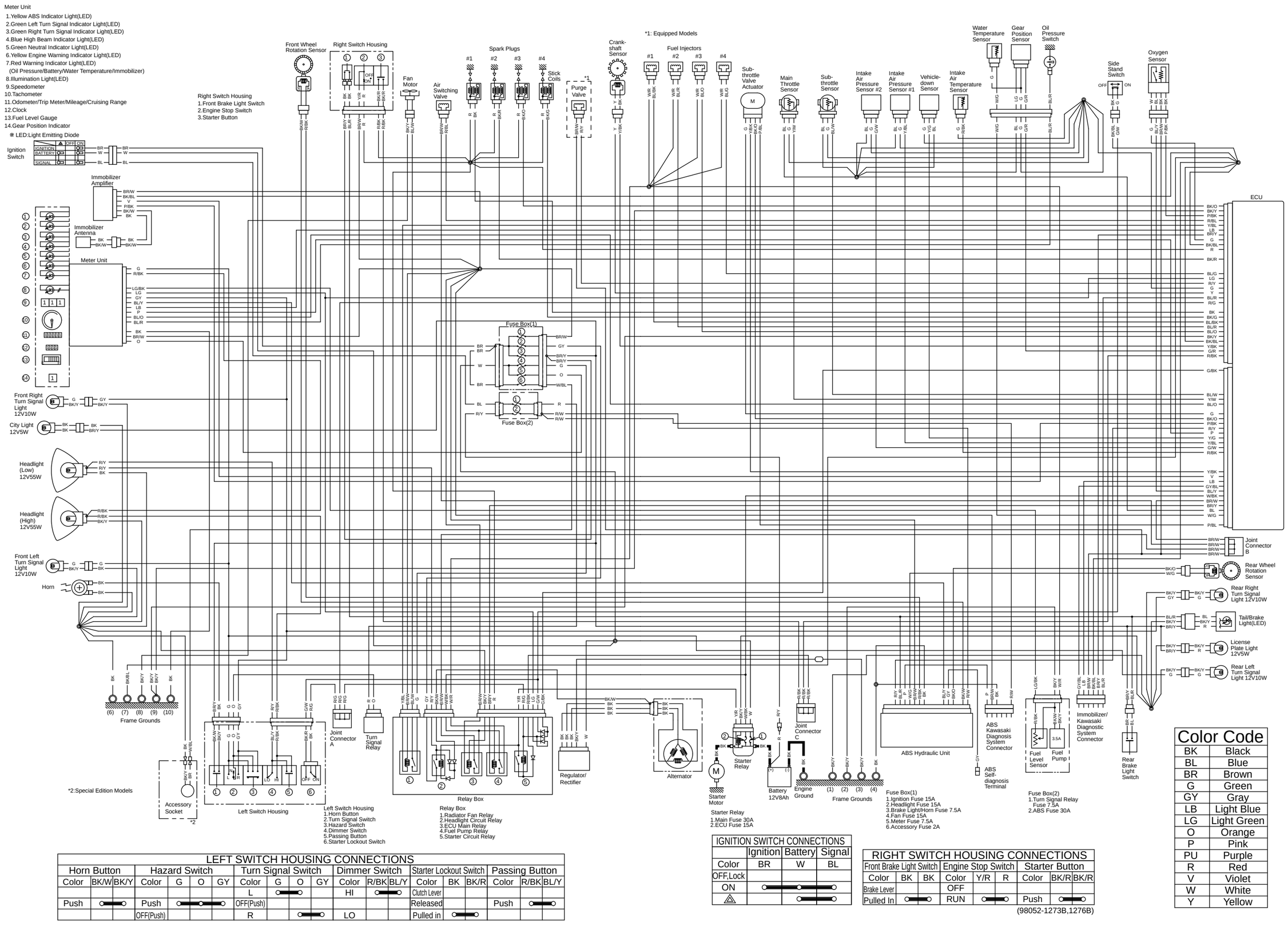

Color Code

BK	Black
BL	Blue
BR	Brown
G	Green
GY	Gray
LB	Light Blue
LG	Light Green
O	Orange
P	Pink
PU	Purple
R	Red
V	Violet
W	White
Y	Yellow

LEFT SWITCH HOUSING CONNECTIONS

Horn Button			Hazard Switch				Turn Signal Switch				Dimmer Switch			Starter Lockout Switch			Passing Button		
Color	BK/W	BK/Y	Color	G	O	GY	Color	G	O	GY	Color	R/BK	BL/Y	Color	BK	BK/R	Color	R/BK	BL/Y
							L				HI			Clutch Lever					
Push			Push				OFF(Push)							Released			Push		
			OFF(Push)				R				LO			Pulled in					

IGNITION SWITCH CONNECTIONS

	Ignition	Battery	Signal
Color	BR	W	BL
OFF,Lock			
ON			
⚠			

RIGHT SWITCH HOUSING CONNECTIONS

Front Brake Light Switch			Engine Stop Switch			Starter Button		
Color	BK	BK	Color	Y/R	R	Color	BK/R	BK/R
Brake Lever			OFF					
Pulled In			RUN			Push		

(98052-1273B,1276B)

Part No.99924-1525-01

MODEL APPLICATION

Year	Model	Beginning Frame No.
2017	ZR900AH	JKAZR2A1□HDA00001
2017	ZR900BH	JKAZR2B1□HDA00001 JKAZR900BBDA00001

□:This digit in the frame number changes from one machine to another.

Kawasaki Heavy Industries, Ltd. Motorcycle & Engine Company

Printed in Japan