Applies To: **2004–07 TL** – ALL
2008 TL – From VIN 19UUA....8A000001 thru 19UUA....8A009070

September 6, 2007

Driver's Side Vent Rattles While Driving

SYMPTOM

The driver's side vent rattles while driving.

NOTE: Ask the client when the rattle happens.

PROBABLE CAUSE

The vent's lower rib vibrates against the lower housing.

CORRECTIVE ACTION

Apply wool felt between the rib and the lower housing surface.

REQUIRED MATERIALS

Wool Felt, 1 mm (one roll repairs about 500 vehicles):
P/N 06993-SA5-000

WARRANTY CLAIM INFORMATION

In warranty: The normal warranty applies.

Operation Number:	8410A8
Flat Rate Time:	0.4 hour
Failed Part:	77620-SEP-A21ZA
Defect Code:	07403
Symptom Code:	04209
Template ID:	07-048A
Skill Level:	Repair Technician

Out of warranty: Any repair performed after warranty expiration may be eligible for goodwill consideration by the District Parts and Service Manager or your Zone Office. You must request consideration, and get a decision, before starting work.

DIAGNOSIS

1. Duplicate the rattle based on the client's specific complaint.
2. While the vent is rattling, apply a small amount of pressure to the lower aluminum trim on the driver's side vent.

- If the rattle is affected by the pressure, go to REPAIR PROCEDURE.
- If the rattle is not affected by the pressure, continue with normal troubleshooting.

© 2007 American Honda Motor Co., Inc. – All Rights Reserved

Skill Level
R
REPAIR

CLIENT INFORMATION: The information in this bulletin is intended for use only by skilled technicians who have the proper tools, equipment, and training to correctly and safely maintain your vehicle. These procedures should not be attempted by "do-it-yourselfers," and you should not assume this bulletin applies to your vehicle, or that your vehicle has the condition described. To determine whether this information applies, contact an authorized Acura automobile dealer.

REPAIR PROCEDURE

NOTE: Be careful not to scratch the dashboard and related components when removing the vent. Also, make sure to put on gloves to protect your hands from sharp objects.

1. Remove the driver's dashboard lower cover:
   - Refer to the Body section of the appropriate service manual, or
   - Online, enter keyword **LOWER DASH**, and select **Driver's Dashboard Lower Cover Removal/Installation** from the list.
2. Remove the driver's side vent:
   - Refer to the Body section of the appropriate service manual, or
   - Online, enter keyword **DASH SIDE**, and select **Dashboard Side Vent Removal/Installation** from the list.
3. Cut a 10 mm x 20 mm piece of wool felt.
4. Gently rotate the aluminum trim downward about 1.5 mm (.059 in.), and slide the wool felt under the rib.

   NOTE: Apply the felt so the adhesive backing faces down against the lower housing surface.

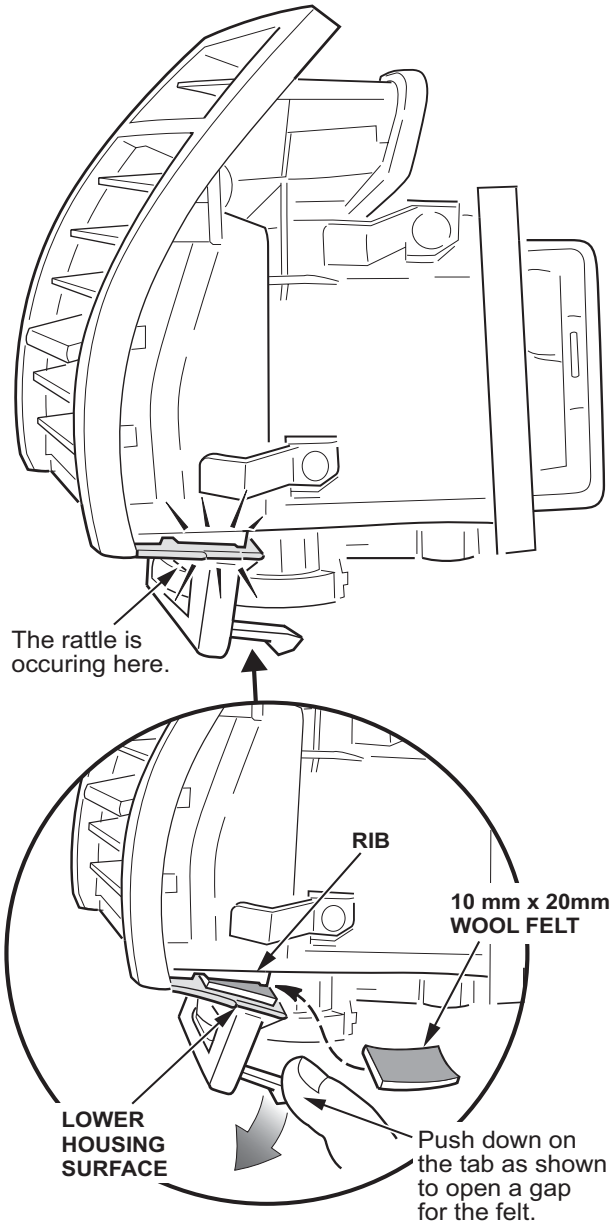

5. Reinstall the driver's side vent.
6. Reinstall the driver's dashboard lower cover.
7. Test-drive the vehicle to make sure the problem is gone.