Safety Recall
Code: 97GF

Subject | **Front Door Wiring Harness**

Release Date | June 22, 2022

Affected Vehicles

Country	Beginning Model Year	Ending Model Year	Vehicle	Vehicle Count
USA	2019	2023	ATLAS	146,619
USA	2020	2023	ATLAS CROSS SPORT	76,273
CAN	2019	2022	ATLAS	14,973
CAN	2020	2022	ATLAS CROSS SPORT	8,219

Check Campaigns/Actions screen in ELSA on the day of repair to verify that a VIN qualifies for repair under this action. ELSA is the only valid campaign inquiry & verification source.

- ✓ *Campaign status must show "open."*
- ✓ *If ELSA shows other open action(s), inform your customer so that the work can also be completed at the same time the vehicle is in the workshop for this campaign.*

Problem Description

In the event of a side crash, when the side airbag deployment may be necessary, the side airbag may deploy later than designed, which can lead to an increased risk of injury to vehicle occupants. This issue may be caused by excessive micromovement, leading to fretting corrosion of the door wiring harness terminal contacts.

Corrective Action

To identify and correct this defect, authorized Volkswagen dealers will check both front doors to determine if diagnostic trouble (fault) code(s) specific to the affected wiring harness are present. If the fault code(s) are present for a front door, the affected wiring harness will be replaced in that door. Harnesses will be modified with a zip tie to secure them, and a stabilizing compound will be applied to the terminal ends of the affected wiring harness connectors.

If fault codes are not found, the existing wiring harness will be modified with a zip tie to secure it and a stabilizing compound will be applied to the terminal ends of the affected wiring harness connector(s).

Precautions

If the recall condition is present in the vehicle, the airbag warning light will illuminate if a malfunction is detected. Other symptoms of a sporadic interruption of the affected electrical connection can be: inadvertently rolling down windows, inadvertent park brake engagement at low speeds (below approximately 3km/h or 1.8 mph), warning regarding faulty door sensor. Customers experiencing any of these conditions are advised to contact an authorized Volkswagen dealer to have their vehicle diagnosed/repaired without delay.

Code Visibility

On or about June 22, 2022, the campaign code will be applied to affected vehicles.

Owner Notification

Owner notification will take place in June 2022. Owner letter examples are included in this bulletin for your reference.

Additional Information

Please alert everyone in your dealership about this action, including Sales, Service, Parts and Accounting personnel. Contact Warranty if you have any questions.

The repair information in this document is intended for use only by skilled technicians who have the proper tools, equipment and training to correctly and safely maintain your vehicle. These procedures are not intended to be attempted by "do-it-yourselfers," and you should not assume this document applies to your vehicle, or that your vehicle has the condition described. To determine whether this information applies, contact an authorized Volkswagen dealer. ©2022 Volkswagen Group of America, Inc. and Volkswagen Canada. All Rights Reserved.

IMPORTANT REMINDER ON VEHICLES AFFECTED BY SAFETY & COMPLIANCE RECALL

New Vehicles in Dealer Inventory: It is a violation of federal law for a dealer to deliver a new motor vehicle or any new or used item of motor vehicle equipment (including a tire) covered by this notification under a sale or lease until the defect or noncompliance is remedied. By law, dealers must correct, prior to delivery for sale or lease, any vehicle that fails to comply with an applicable Federal Motor Vehicle Safety Standard or that contains a defect relating to motor vehicle safety.

Pre-Owned Vehicles in Dealer Inventory: Dealers should not deliver any pre-owned vehicles in their inventory which are involved in a safety or compliance recall until the defect has been remedied.

Dealers must ensure that every affected inventory vehicle has this campaign completed before delivery to consumers.

Fill out and affix Campaign Completion Label (CAMP 010 000) after work is complete.
Labels can be ordered at no cost via the Compliance Label Ordering portal at www.vwhub.com.

The repair information in this document is intended for use only by skilled technicians who have the proper tools, equipment and training to correctly and safely maintain your vehicle. These procedures are not intended to be attempted by "do-it-yourselfers," and you should not assume this document applies to your vehicle, or that your vehicle has the condition described. To determine whether this information applies, contact an authorized Volkswagen dealer. ©2022 Volkswagen Group of America, Inc. and Volkswagen Canada. All Rights Reserved.

Parts Information

Parts Control Type: **VIN to Order**	If parts are needed to support a vehicle repair: • US Dealers - use AVA • CAN Dealers - contact the Parts Specialists via phone (800-767-6552), email (VWoAPartsSpecialists@vw.com), or chat/text with the VIN to order

Parts Control Type: **Upper Order Limit**	Parts will be managed with a weekly Upper Order Limit. Please see Parts On Command (POC) for your Upper Order Limit quantity.

Initial Allocation: **YES** G -055-150-A1 N -106-622-01 WHT-005-353	Dealers will be sent an initial allocation prior to customer notification. If no initial allocation was received, please reference the Repair Projection Tool (below) to view your potential VIN population.

Repair Projection Tool: **(right click to open)**	

IF NO FAULTS ARE STORED FOR A DOOR HARNESS:

Criteria	Quantity	Part Number	P.O.C. Part Description	Ordering Method
01	As needed	G -055-150-A1	LITH.GREAS (lithium grease) (shop supply)	UOL
		NOTE: One tube is expected to repair at least 150 harnesses		
	Up to 2	N -106-622-01	TIE WRAP	UOL

IF FAULTS ARE STORED FOR A DOOR HARNESS:

CRITICAL PARTS INFORMATION

STOP! Do not order a door harness unless it is absolutely needed! The expected need for a door harness is less than 1%. Ordering parts unnecessarily will cause delays.

Criteria	Quantity	Part Number	P.O.C. Part Description	Ordering Method
01	As needed	SEE ETKA	DOOR HARNESS (driver front and/or passenger front)	VIN to Order
	As needed	G -055-150-A1	LITH.GREAS (lithium grease) (shop supply)	UOL
		NOTE: One tube is expected to repair at least 150 harnesses		
	6 per door	WHT-005-353	RIVET	UOL

NOTE

The specified part numbers reflect the status at the start of this action. Interim updates made in ETKA can cause a listed part number to become unavailable. In this case, the new part number specified in ETKA should be used.

The repair information in this document is intended for use only by skilled technicians who have the proper tools, equipment and training to correctly and safely maintain your vehicle. These procedures are not intended to be attempted by "do-it-yourselfers," and you should not assume this document applies to your vehicle, or that your vehicle has the condition described. To determine whether this information applies, contact an authorized Volkswagen dealer. ©2022 Volkswagen Group of America, Inc. and Volkswagen Canada. All Rights Reserved.

Claim Entry Instructions

The labor times listed here may differ from the labor operations and labor times listed in ELSA.

After campaign has been completed, enter claim as soon as possible to help prevent work from being duplicated elsewhere. Attach the ELSA screen print showing action *open on the day of repair* to the repair order.

If customer refused campaign work:

- ✓ U.S. dealers: Submit request via WISE under the *Campaigns/Update/Recall Closure* option.
- ✓ Canada dealers: Upload the repair order [signed by customer] to Volkswagen WIN/Operations/Campaign Closure.

Service Number	97GF
Damage Code	0099
Parts Vendor Code	WWO
Claim Type	Sold vehicle: 7 10 Unsold vehicle: 7 90
Causal Indicator	Mark labor as causal if door harness is NOT replaced Mark DOOR HARNESS* as causal part if harness IS replaced
Vehicle Wash/Loaner	Do not claim wash/loaner under this action **U.S.A.:** Loaner/rental coverage cannot be claimed under this action. However, loaner/rental may be covered under the Alternate Transportation Program. Please refer to the Volkswagen Warranty Policy and Procedures Manual for loaner claims information and reimbursement details. **Canada:** Loaner/rental coverage cannot be claimed under this action. Please refer to Volkswagen Service Loaner Program to determine loaner eligibility.
Criteria I.D.	01
	Check DTC memory for front door harness related faults. No related faults are stored. Install tie wrap and apply grease to driver front and passenger front door harnesses.

LABOR

Labor Op	Time Units	Description
9732 49 99	70	Modify driver front and passenger front door harnesses
2706 89 50	10	Connect battery charger
0150 00 00	Time stated on diagnostic protocol (up to 40 TU)	Checking and clearing faults via GFF

PARTS

Quantity	Part Number	Description
2.00	N 10662201	TIE WRAP

Continued on next page

The repair information in this document is intended for use only by skilled technicians who have the proper tools, equipment and training to correctly and safely maintain your vehicle. These procedures are not intended to be attempted by "do-it-yourselfers," and you should not assume this document applies to your vehicle, or that your vehicle has the condition described. To determine whether this information applies, contact an authorized Volkswagen dealer. ©2022 Volkswagen Group of America, Inc. and Volkswagen Canada. All Rights Reserved.

-OR-	Check DTC memory for front door harness related faults. Fault(s) stored for DRIVER door harness. Replace driver front door harness. Install tie wrap to passenger front door harness. Apply grease (shop supply) to driver front and passenger front door harnesses.		
	LABOR		
	Labor Op	**Time Units**	**Description**
	9732 19 99	90	Replace driver front door harness
	9732 50 99	60	Modify front door harnesses
	2706 89 50	10	Connect battery charger
	0150 00 00	Time stated on diagnostic protocol (up to 40 TU)	Checking and clearing faults via GFF
	PARTS		
	Quantity	**Part Number**	**Description**
	1.00	SEE ETKA	DOOR HARNESS (driver front)*
	1.00	N 10662201	TIE WRAP
	6.00	WHT005353	RIVET
-OR-	Check DTC memory for front door harness related faults. Fault(s) stored for PASSENGER door harness. Install tie wrap to driver front door harness. Apply grease (shop supply) to driver front and passenger front door harnesses.		
	LABOR		
	Labor Op	**Time Units**	**Description**
	9732 19 99	90	Replace passenger front door harness
	9732 50 99	60	Modify front door harnesses
	2706 89 50	10	Connect battery charger
	0150 00 00	Time stated on diagnostic protocol (up to 40 TU)	Checking and clearing faults via GFF
	PARTS		
	Quantity	**Part Number**	**Description**
	1.00	SEE ETKA	DOOR HARNESS (passenger front)*
	1.00	N 10662201	TIE WRAP
	6.00	WHT005353	RIVET

Continued on next page

The repair information in this document is intended for use only by skilled technicians who have the proper tools, equipment and training to correctly and safely maintain your vehicle. These procedures are not intended to be attempted by "do-it-yourselfers," and you should not assume this document applies to your vehicle, or that your vehicle has the condition described. To determine whether this information applies, contact an authorized Volkswagen dealer. ©2022 Volkswagen Group of America, Inc. and Volkswagen Canada. All Rights Reserved.

-OR-	Check DTC memory for front door harness related faults. Fault(s) stored for BOTH door harnesses. Replace both front door harnesses. Apply grease (shop supply) to both front door harnesses.		
	LABOR		
	Labor Op	**Time Units**	**Description**
	9732 20 99	160	Replace both front door harnesses
	9732 50 99	60	Modify front door harnesses
	2706 89 50	10	Connect battery charger
	0150 00 00	Time stated on diagnostic protocol (up to 40 TU)	Checking and clearing faults via GFF
	PARTS		
	Quantity	**Part Number**	**Description**
	1.00	SEE ETKA	DOOR HARNESS (driver front)*
	1.00	SEE ETKA	DOOR HARNESS (passenger front)
	12.00	WHT005353	RIVET

The repair information in this document is intended for use only by skilled technicians who have the proper tools, equipment and training to correctly and safely maintain your vehicle. These procedures are not intended to be attempted by “do-it-yourselfers,” and you should not assume this document applies to your vehicle, or that your vehicle has the condition described. To determine whether this information applies, contact an authorized Volkswagen dealer. ©2022 Volkswagen Group of America, Inc. and Volkswagen Canada. All Rights Reserved.

Customer Letter Example (USA)

This notice applies to your vehicle: <MODEL YEAR> <BRAND> <CARLINE>, <VIN>

NHTSA: 22V152

Subject: Safety Recall 97GF –Front Door Wiring Harness

Dear Volkswagen Owner,

This notice is sent to you in accordance with the National Traffic and Motor Vehicle Safety Act. Volkswagen has decided that a defect, which relates to motor vehicle safety, exists in certain 2019-2023 model year Volkswagen vehicles. Our records show that you are the owner of a vehicle affected by this action.

What is the issue?

In the event of a side crash, when the side airbag deployment may be necessary, the side airbag may deploy later than designed, which can lead to an increased risk of injury to vehicle occupants. This issue may be caused by excessive micromovement, leading to fretting corrosion of the door wiring harness terminal contacts.

What will we do?

To identify and correct this defect, authorized Volkswagen dealers will check both front doors to determine if diagnostic trouble (fault) code(s) specific to the affected wiring harness are present. If the fault code(s) are present for a front door, the affected wiring harness will be replaced in that door. Harnesses will be modified with a zip tie to secure them, and a stabilizing compound will be applied to the terminal ends of the affected wiring harness connectors.

If fault codes are not found, the existing wiring harness will be modified with a zip tie to secure it and a stabilizing compound will be applied to the terminal ends of the affected wiring harness connector(s).

This work will take about two hours to complete and will be performed for you free of charge. Please keep in mind that your dealer may need additional time for the preparation of the repair, as well as to accommodate their daily workshop schedule.

What should you do?

Please contact your authorized Volkswagen dealer without delay to schedule this recall work. To set up an appointment online, please visit www.vw.com/find-a-dealer.

Precautions you should take

If the recall condition is present in the vehicle, the airbag warning light will illuminate if a malfunction is detected. Other symptoms of a sporadic interruption of the affected electrical connection can be: inadvertently rolling down windows, inadvertent park brake engagement at low speeds (below approximately 3km/h or 1.8 mph), warning regarding faulty door sensor. Customers experiencing any of these conditions are advised to contact an authorized Volkswagen dealer to have their vehicle diagnosed/repaired without delay.

Lease vehicles and address changes

If you are the lessor and registered owner of the vehicle identified in this action, the law requires you to forward this letter immediately via first-class mail to the lessee within ten (10) days of receipt. If you have changed your address or sold the vehicle, please fill out the enclosed prepaid Owner Reply card and mail it to us so we can update our records.

Reimbursement of Expenses

If you have previously paid for repairs relating to the condition described in this letter, please refer to the enclosed form that explains how to request reimbursement.

Can we assist you further?

If your authorized Volkswagen dealer fails or is unable to complete this work free of charge within a reasonable time, or if you should have any questions about this communication, please reach out to us using your preferred method of communication at www.vw.com/contact or by calling us at 800-893-5298.

Checking your vehicle for open Recalls and Service Campaigns

To check your vehicle's eligibility for repair under this or any other recall/service campaign, please visit www.vw.com/owners/recalls and enter your Vehicle Identification Number (VIN) into the Recall/Service Campaign Lookup tool.

If you still cannot obtain satisfaction, you may file a complaint with: The Administrator, National Highway Traffic Safety Administration, 1200 New Jersey Avenue, SE., Washington, DC 20590; or call the toll-free Vehicle Safety Hotline at 1-888-327-4236 (TTY: 1-800-424-9153); or go to http://www.safercar.gov.

We apologize for any inconvenience this matter may cause; however we are taking this action to help ensure your safety and continued satisfaction with your vehicle.

Sincerely,

Volkswagen Customer Protection

The repair information in this document is intended for use only by skilled technicians who have the proper tools, equipment and training to correctly and safely maintain your vehicle. These procedures are not intended to be attempted by "do-it-yourselfers," and you should not assume this document applies to your vehicle, or that your vehicle has the condition described. To determine whether this information applies, contact an authorized Volkswagen dealer. ©2022 Volkswagen Group of America, Inc. and Volkswagen Canada. All Rights Reserved.

Customer Letter Example (Canada)

This notice applies to your vehicle: <MODEL YEAR> <BRAND> <CARLINE>, <VIN>

Transport Canada Recall: 2022-110

Subject: Safety Recall 97GF –Front Door Wiring Harness

Dear Volkswagen Owner,

This notice is sent to you in accordance with the requirements of the *Motor Vehicle Safety Act*. This is to inform you that your vehicle may contain a defect that could affect the safety of a person. Our records show that you are the owner of a vehicle affected by this action.

What is the issue?

In the event of a side crash, when the side airbag deployment may be necessary, the side airbag may deploy later than designed, which can lead to an increased risk of injury to vehicle occupants. This issue may be caused by excessive micromovement, leading to fretting corrosion of the door wiring harness terminal contacts.

What will we do?

To identify and correct this defect, authorized Volkswagen dealers will check both front doors to determine if diagnostic trouble (fault) code(s) specific to the affected wiring harness are present. If the fault code(s) are present for a front door, the affected wiring harness will be replaced in that door. Harnesses will be modified with a zip tie to secure them, and a stabilizing compound will be applied to the terminal ends of the affected wiring harness connectors.

If fault codes are not found, the existing wiring harness will be modified with a zip tie to secure it and a stabilizing compound will be applied to the terminal ends of the affected wiring harness connector(s).

This work will take about two hours to complete and will be performed for you free of charge. Please keep in mind that your dealer may need additional time for the preparation of the repair, as well as to accommodate their daily workshop schedule.

What should you do?

Please contact your authorized Volkswagen dealer without delay to schedule this recall work.

Precautions you should take

If the recall condition is present in the vehicle, the airbag warning light will illuminate if a malfunction is detected. Other symptoms of a sporadic interruption of the affected electrical connection can be: inadvertently rolling down windows, inadvertent park brake engagement at low speeds (below approximately 3km/h or 1.8 mph), warning regarding faulty door sensor. Customers experiencing any of these conditions are advised to contact an authorized Volkswagen dealer to have their vehicle diagnosed/repaired without delay.

Lease vehicles and address changes

If you are the lessor and registered owner of the vehicle identified in this letter, you shall forward this letter (and any subsequent notice, if applicable) to the lessee within ten (10) days of receipt. If you have changed your address or sold the vehicle identified in this letter, please fill out the enclosed prepaid Owner Reply Card and mail it to us so we can update our records.

Reimbursement of Expenses

If you have previously paid for repairs relating to the condition described in this letter, please refer to the enclosed form that explains how to request reimbursement.

Can we assist you further?

If your authorized Volkswagen dealer fails or is unable to complete this work free of charge within a reasonable time, please contact Customer Relations, Monday through Friday from 8AM to 8PM EST by phone at 1-800-822-8987 or via our “Contact Us” page at www.vw.ca.

We apologize for any inconvenience this matter may cause; however we are taking this action to help ensure your safety and continued satisfaction with your vehicle.

Sincerely,

Volkswagen Customer Protection

The repair information in this document is intended for use only by skilled technicians who have the proper tools, equipment and training to correctly and safely maintain your vehicle. These procedures are not intended to be attempted by “do-it-yourselfers,” and you should not assume this document applies to your vehicle, or that your vehicle has the condition described. To determine whether this information applies, contact an authorized Volkswagen dealer. ©2022 Volkswagen Group of America, Inc. and Volkswagen Canada. All Rights Reserved.

Repair Overview

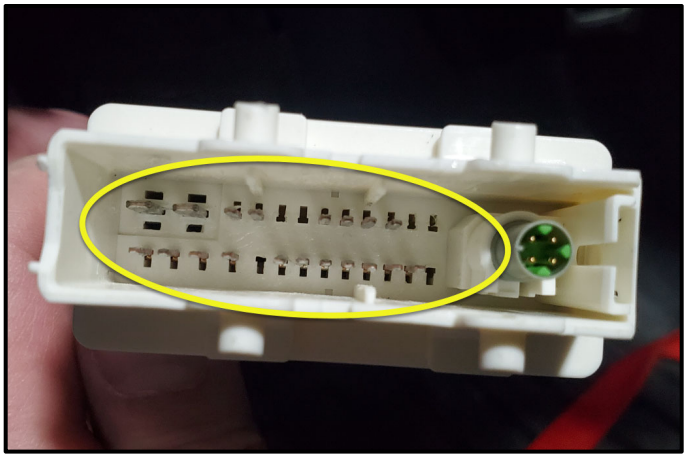

- Check DTC memory for faults related to faulty front door harnesses.
- Modify or replace door harness.

NOTE

- These repair instructions may differ from the labor operations and labor times listed in ELSA.
- Damages resulting from improper repair or failure to follow these work instructions are the dealer's responsibility and are not eligible for reimbursement under this action.
- This procedure must be read in its entirety prior to performing the repair.
- Due to variations in vehicle equipment and options, the steps/illustrations in this work procedure may not identically match all affected vehicles.
- Diagnosis and repair of pre-existing conditions in the vehicle are not covered under this action.
- When working during extreme temperatures, it is recommended that the vehicle be allowed to acclimate inside the shop to avoid temperature-related component damage/breakage.

The repair information in this document is intended for use only by skilled technicians who have the proper tools, equipment and training to correctly and safely maintain your vehicle. These procedures are not intended to be attempted by "do-it-yourselfers," and you should not assume this document applies to your vehicle, or that your vehicle has the condition described. To determine whether this information applies, contact an authorized Volkswagen dealer. ©2022 Volkswagen Group of America, Inc. and Volkswagen Canada. All Rights Reserved.

Required Tools

	Trim Removal Wedge -3409- (or equivalent)		Wedge Set -T10383- (or equivalent)
	Small brush (paint brush, for example) (locally sourced shop supply)		Omega Clip Tool -T40280- (or equivalent)
	Pop Rivet Nut Pliers -VAS5072A- (or equivalent) IF DOOR HARNESS REQUIRES REPLACEMENT		Pry lever -80-200- (or equivalent)

The repair information in this document is intended for use only by skilled technicians who have the proper tools, equipment and training to correctly and safely maintain your vehicle. These procedures are not intended to be attempted by “do-it-yourselfers,” and you should not assume this document applies to your vehicle, or that your vehicle has the condition described. To determine whether this information applies, contact an authorized Volkswagen dealer. ©2022 Volkswagen Group of America, Inc. and Volkswagen Canada. All Rights Reserved.

Repair Instruction

Section A - Check for Previous Repair

TIP

If Campaign Completion label is present, no further work is required.

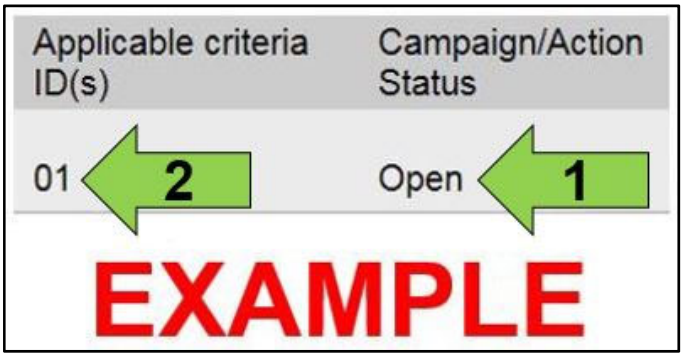

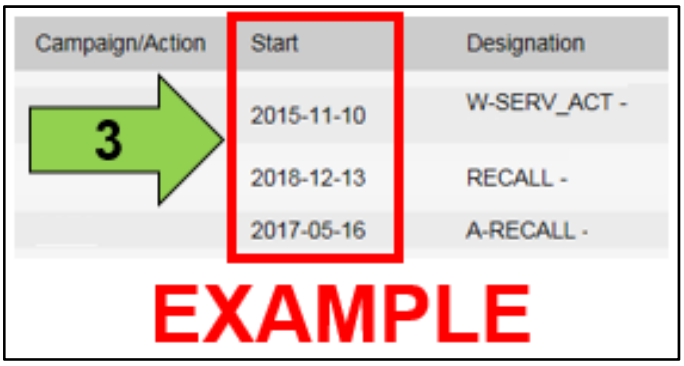

- Enter the VIN in Elsa and proceed to the "Campaign/Action" screen.

TIP

On the date of repair, print this screen and keep a copy with the repair order.

- Confirm the Campaign/Action is open <arrow 1>. If the status is closed, no further work is required.
- Note the Applicable Criteria ID <arrow 2> for use in determining the correct work to be done and corresponding parts associated.

CRITICAL REPAIR STEP

STOP!

If multiple software update Campaign/Actions are open, they must be performed in order of the Start date <arrow 3>. The oldest should be performed first.

- **All Safety Recalls must be completed prior to completing this campaign.**
- **Proceed to Section B.**

The repair information in this document is intended for use only by skilled technicians who have the proper tools, equipment and training to correctly and safely maintain your vehicle. These procedures are not intended to be attempted by "do-it-yourselfers," and you should not assume this document applies to your vehicle, or that your vehicle has the condition described. To determine whether this information applies, contact an authorized Volkswagen dealer. ©2022 Volkswagen Group of America, Inc. and Volkswagen Canada. All Rights Reserved.

Section B – Door Harness Fault Evaluation

- Perform a GFF diagnostic scan of the vehicle using ODIS.
- If any of the faults listed in the table below are present:
  - The corresponding front door harness must be replaced.
  - Lithium grease will also be applied to the corresponding body side wiring harness.
  - Refer to Section C for door harness replacement.
- If no related faults are present:
  - The front door harness (left and/or right) must be modified.
  - Refer to Section D for door harness modification.
- The GFF session should be stopped and saved. Faults will be created during either repair and must be cleared at the end of the repair.
- If a front door harness is replaced, and there are no faults for the opposite side front door harness. The opposite side door harness must still be modified.

Diagnostic Address	DTC	DTC Description	Side
1 *or* 19	U0199	Lost Communication With "Door Control Module A"	Left
19	U0200	Lost Communication With "Door Control Module B"	Right
42	B1908F0	Crash response active	Left
52	B1908F0	Crash response active	Right
15	B101711	Crash sensor for side airbag driver's side short circuit to ground	Left
15	B101715	Crash sensor for side airbag driver's side short circuit to B+	Left
15	B101729	Crash sensor for side airbag driver's side implausible signal	Left
15	B103611	Crash sensor for side airbag passenger's side short circuit to ground	Right
15	B103615	Crash sensor for side airbag passenger's side open circuit	Right
15	B103629	Crash sensor for side airbag passenger's side implausible signal	Right
42	B177501	Door warning light / entry light electrical fault	Left
52	B177501	Door warning light / entry light electrical fault	Right
3C	C1361F0	Lane change assistant warning light, left exterior mirror Open circuit / short circuit to positive	Left
3C	C1360F0	Lane change assistant warning light, left exterior mirror Open circuit / short circuit to positive	Right
42	B11F411	Motor for mirror adjustment Short circuit to ground	Left
B7	B116B29	Sensor for door handle contact driver side implausible signal	Left
42	B122B13	Engines for central locking interruption	Left
42	B122D29	Locking unit for central locking implausible signal	Left

The repair information in this document is intended for use only by skilled technicians who have the proper tools, equipment and training to correctly and safely maintain your vehicle. These procedures are not intended to be attempted by “do-it-yourselfers,” and you should not assume this document applies to your vehicle, or that your vehicle has the condition described. To determine whether this information applies, contact an authorized Volkswagen dealer. ©2022 Volkswagen Group of America, Inc. and Volkswagen Canada. All Rights Reserved.

Section C – Replacing Door Wiring Harness

Remove front door trim panel:

> **NOTE**
>
> The removal and installation for the driver side front door trim panel is described. The removal and installation for the front passenger side is similar.

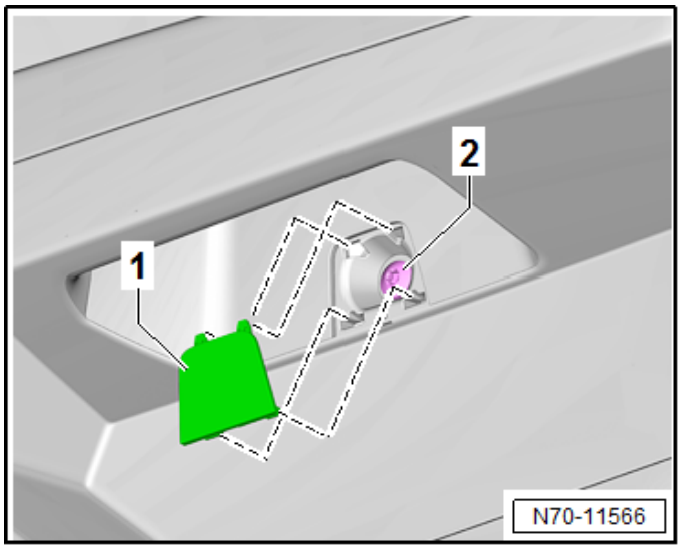

- Pry off the cap <1> with the Trim Removal Wedge -3409-.
- Remove the bolt <2>.

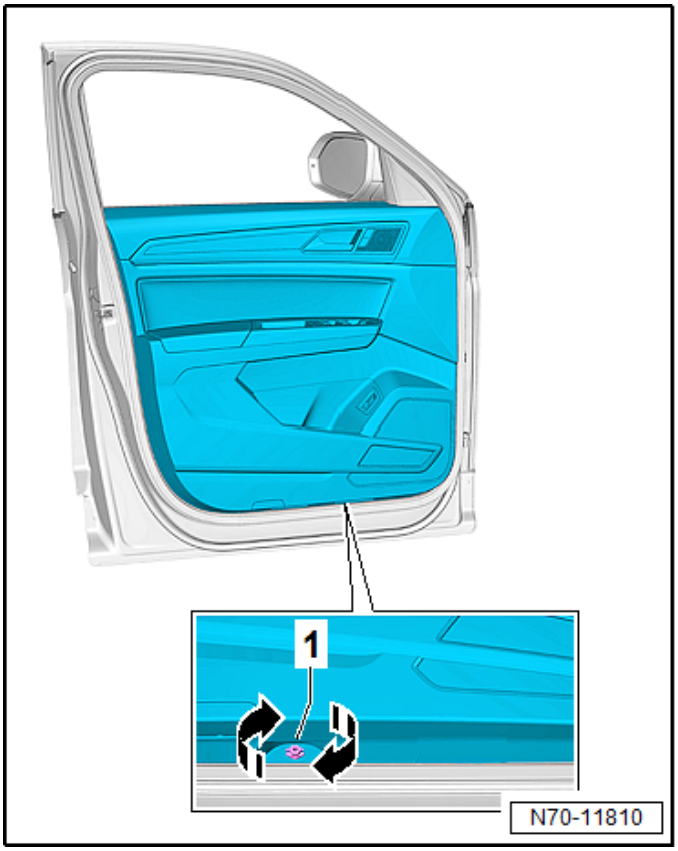

- Turn/release the rotor clip <1> 90° in the <direction of the arrow> (1/4 of a turn) using the open end wrench (10 mm) or Torx T30.

The repair information in this document is intended for use only by skilled technicians who have the proper tools, equipment and training to correctly and safely maintain your vehicle. These procedures are not intended to be attempted by "do-it-yourselfers," and you should not assume this document applies to your vehicle, or that your vehicle has the condition described. To determine whether this information applies, contact an authorized Volkswagen dealer. ©2022 Volkswagen Group of America, Inc. and Volkswagen Canada. All Rights Reserved.

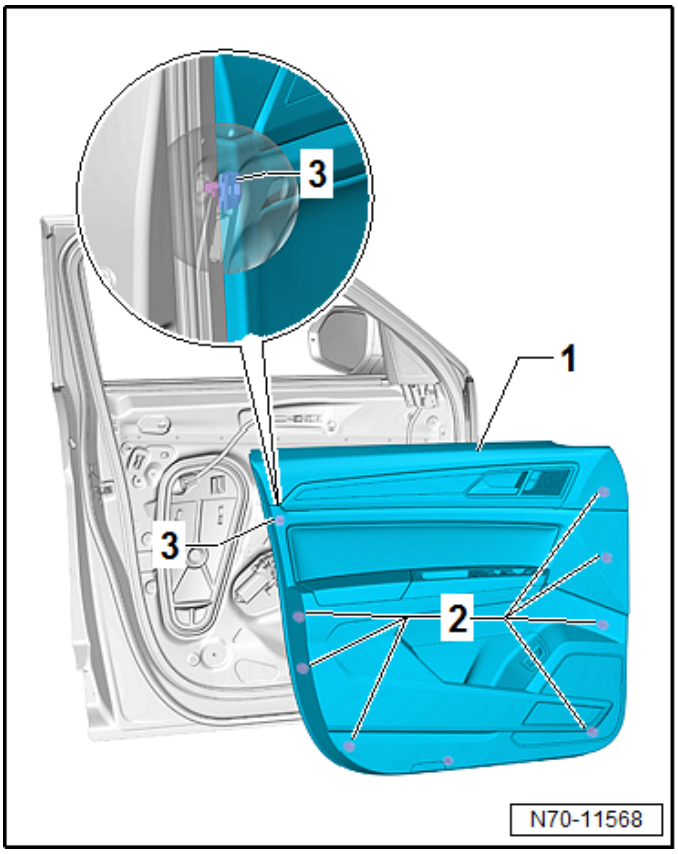

- Loosen the clips <2> for the door trim panel <1> out of the mounts using the Wedge Set <T10383>.
- Remove the door trim panel vertically upward from the window shaft strip. At the same time the crash clip <3> is automatically released.
- **Roll the window all the way up after disengaging door panel and before disconnecting the connectors.**
- Depending on the vehicle equipment level, disconnect the connectors from the door trim panel.

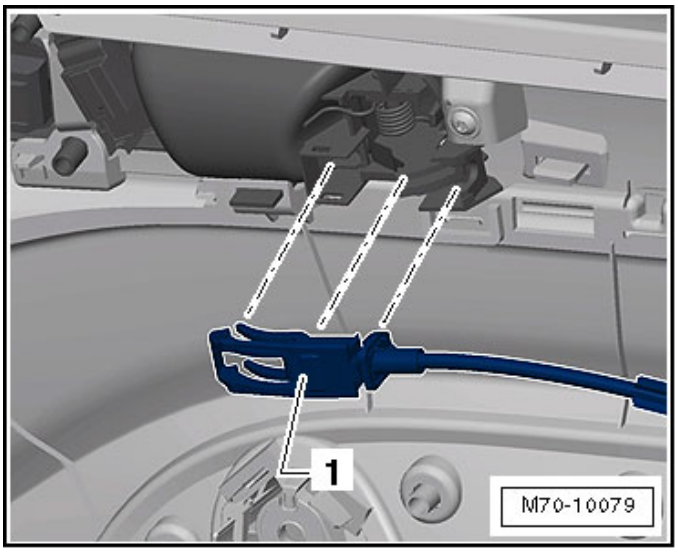

- Disconnect the cable <1> from the interior door mechanism.

CAUTION

Risk of damaging the operating cable by deforming it.

Never sharply bend or kink the operating cable.

The repair information in this document is intended for use only by skilled technicians who have the proper tools, equipment and training to correctly and safely maintain your vehicle. These procedures are not intended to be attempted by “do-it-yourselfers,” and you should not assume this document applies to your vehicle, or that your vehicle has the condition described. To determine whether this information applies, contact an authorized Volkswagen dealer. ©2022 Volkswagen Group of America, Inc. and Volkswagen Canada. All Rights Reserved.

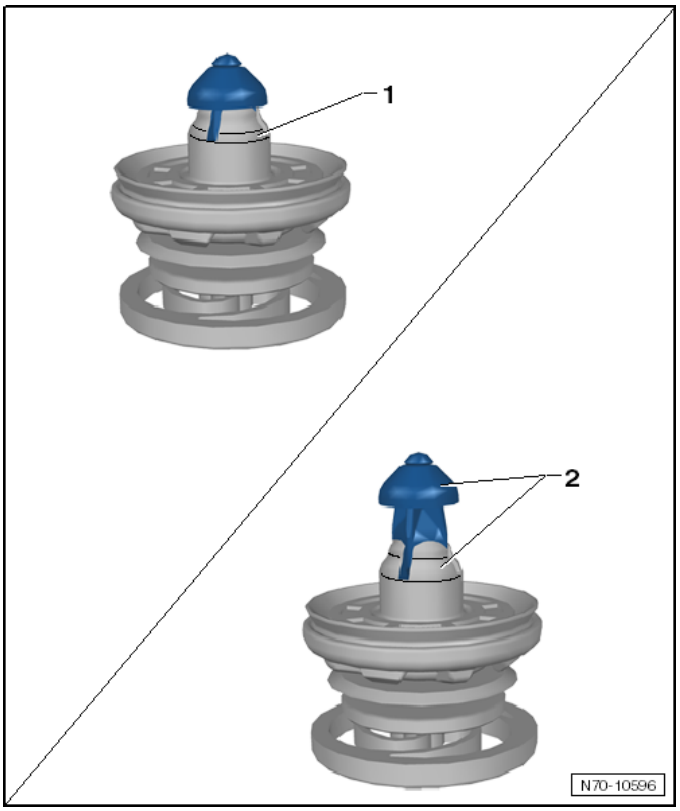

CAUTION

Risk of damaging the locking mechanism.

The locking mechanism of all clip connections must be located in the position <1>.

Always turn the clip from the position <2> into the position <1>.

The door trim panel can only be installed when the clip is in the position <1>.

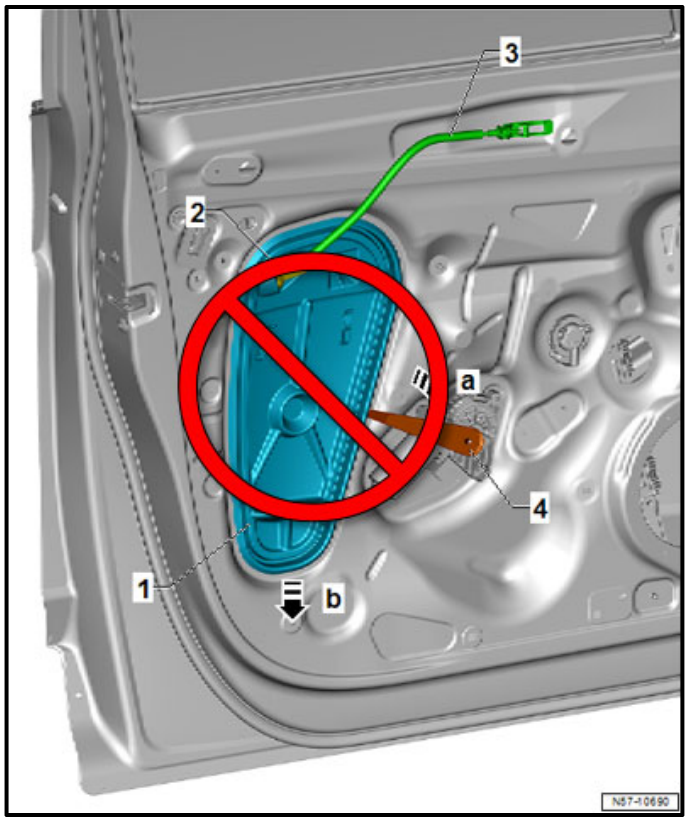

NOTE

The inner door cover does not require removal when replacing the door harness.

If the inner door cover is removed, it must be replaced.

Since replacing the front door harness can be completed without removing the inner door cover, replacing the cover will not be covered under this action.

The repair information in this document is intended for use only by skilled technicians who have the proper tools, equipment and training to correctly and safely maintain your vehicle. These procedures are not intended to be attempted by "do-it-yourselfers," and you should not assume this document applies to your vehicle, or that your vehicle has the condition described. To determine whether this information applies, contact an authorized Volkswagen dealer. ©2022 Volkswagen Group of America, Inc. and Volkswagen Canada. All Rights Reserved.

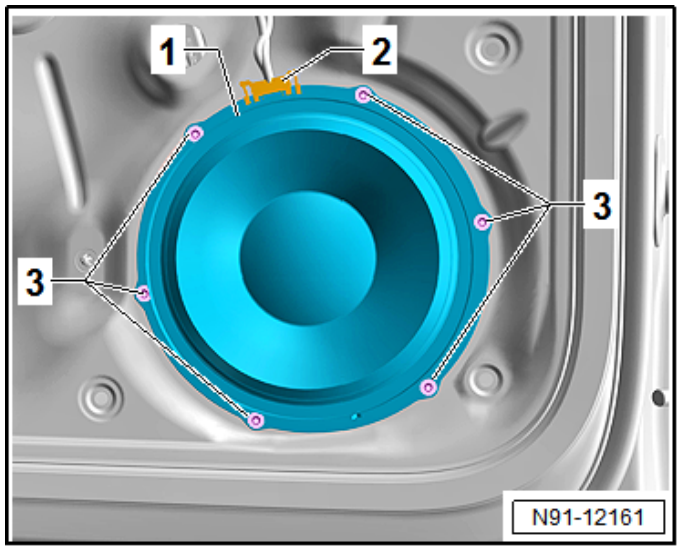

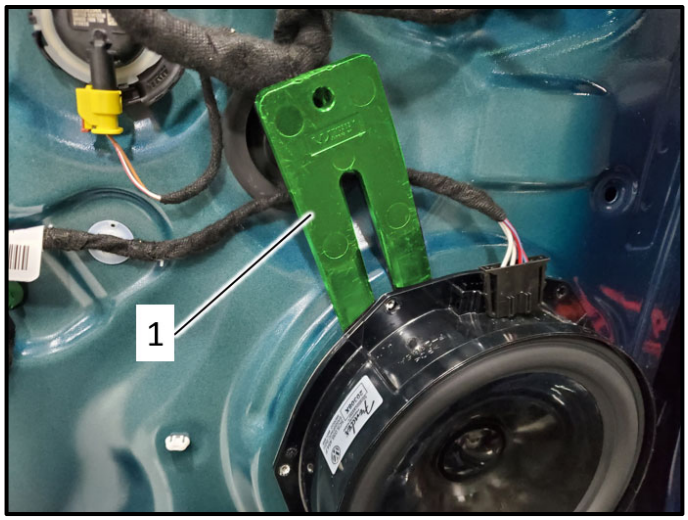

Remove door speaker:

- Release and disconnect the connector <2>.
- Remove the pop rivets <3> with a suitable drill and a suitable drill bit.
- Remove the speaker <1> from the door.
- Use care so the seal on the speaker is not damaged.

⚠ CAUTION

Always remove any shavings resulting from the drilling from the door, otherwise they may cause corrosion damage later.

If the paint on the door frame gets damaged during drilling, touch-up immediately.

TIP

Use a wedge <1> from Wedge Set -T10383- to aid in removing the speaker.

The repair information in this document is intended for use only by skilled technicians who have the proper tools, equipment and training to correctly and safely maintain your vehicle. These procedures are not intended to be attempted by “do-it-yourselfers,” and you should not assume this document applies to your vehicle, or that your vehicle has the condition described. To determine whether this information applies, contact an authorized Volkswagen dealer. ©2022 Volkswagen Group of America, Inc. and Volkswagen Canada. All Rights Reserved.

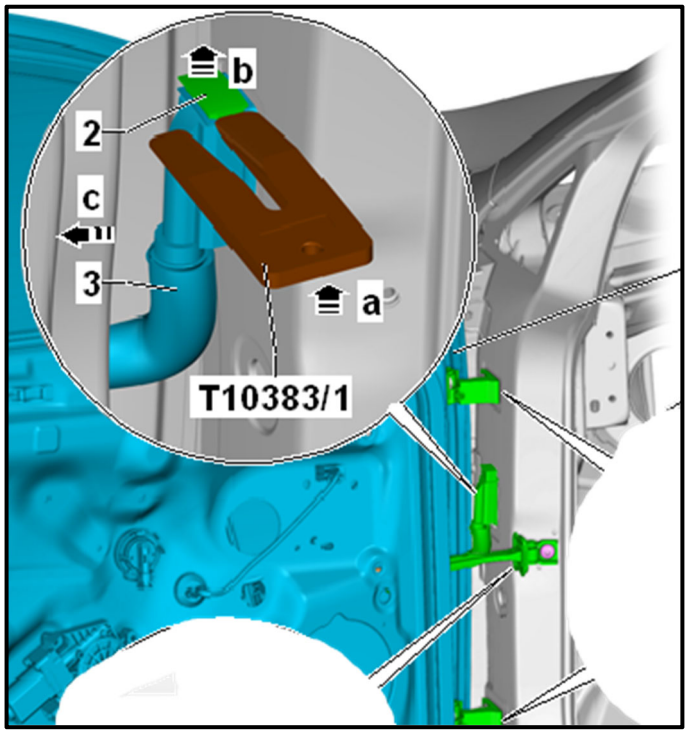

Replace door harness:

> **NOTE**
>
> The removal and installation for the driver side front door harness is described. The removal and installation for the front passenger side is similar.

- Refer to ETKA for the correct door harness part number.
- Pull connector lock <2> upward in direction of <arrow b>.
- Using Wedge -T10383- may assist in releasing the connector lock.
- Pull the harness <3> out from the A-pillar in direction of <arrow c>.

- Work through the speaker opening to disengage the door harness from the door.
- Release the three locking tabs in the <direction of arrows>.

The repair information in this document is intended for use only by skilled technicians who have the proper tools, equipment and training to correctly and safely maintain your vehicle. These procedures are not intended to be attempted by “do-it-yourselfers,” and you should not assume this document applies to your vehicle, or that your vehicle has the condition described. To determine whether this information applies, contact an authorized Volkswagen dealer. ©2022 Volkswagen Group of America, Inc. and Volkswagen Canada. All Rights Reserved.

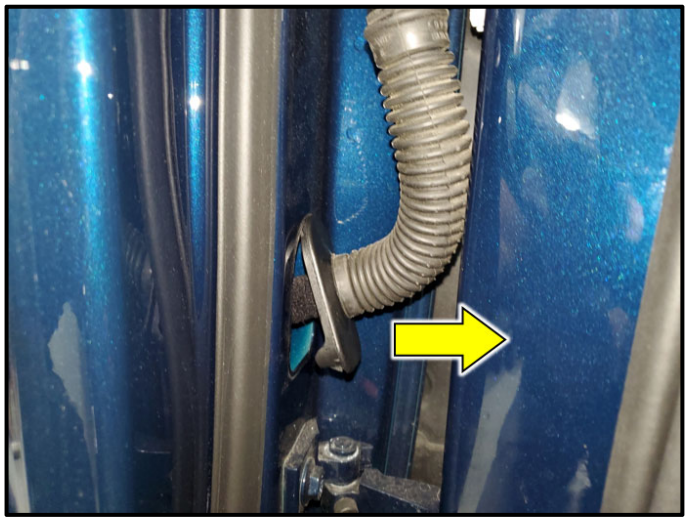

- Pull the door harness away from the door in <direction of arrow>.
- Then pull door harness back into the door.
- **Pay very close attention to how the door harness is routed around the lower part of the window regulator. Take photos if necessary.**

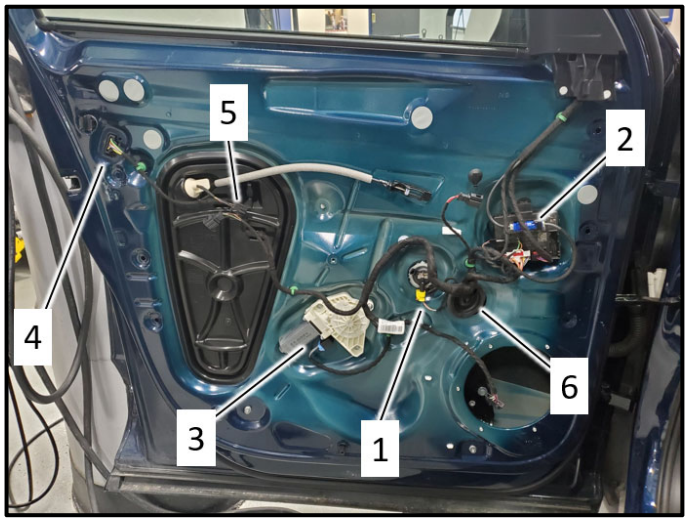

- Take photos of door harness routing.
- Disconnect connector from Thorax Airbag Crash Sensor <1>.

⚠ CAUTION

Pyrotechnical components can deploy unintentionally.

Risk of injury.

Discharge static electricity: briefly touch the door striker.

- Disconnect connectors as needed for:
  - Door control module <2>
  - Window motor <3>
  - Door latch <4>
  - Door handle <5>
- Unclip door harness from the door using Pry lever -80-200- (or equivalent)
- Disengage grommet <6> and remove door harness from the door.
- Install new door harness in the reverse order of removal.
- Ensure all locking connectors are fully seated and locked.
- Ensure grommet <6> is fully seated.

The repair information in this document is intended for use only by skilled technicians who have the proper tools, equipment and training to correctly and safely maintain your vehicle. These procedures are not intended to be attempted by "do-it-yourselfers," and you should not assume this document applies to your vehicle, or that your vehicle has the condition described. To determine whether this information applies, contact an authorized Volkswagen dealer. ©2022 Volkswagen Group of America, Inc. and Volkswagen Canada. All Rights Reserved.

- Secure door harness into the door.
- Ensure locking tabs <arrows> are fully engaged.

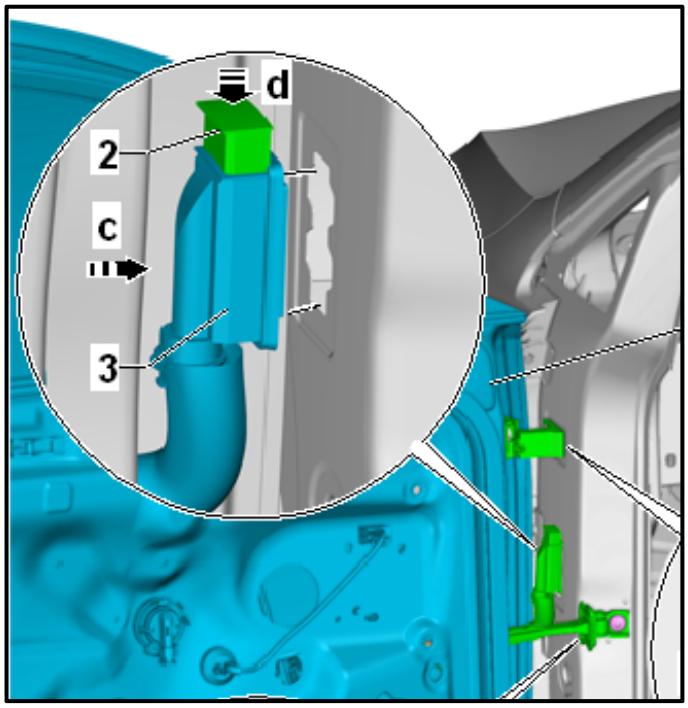

- Connect connector <3> in direction of <arrow c>.
- Press connector lock <2> down in direction of <arrow d>.

The repair information in this document is intended for use only by skilled technicians who have the proper tools, equipment and training to correctly and safely maintain your vehicle. These procedures are not intended to be attempted by “do-it-yourselfers,” and you should not assume this document applies to your vehicle, or that your vehicle has the condition described. To determine whether this information applies, contact an authorized Volkswagen dealer. ©2022 Volkswagen Group of America, Inc. and Volkswagen Canada. All Rights Reserved.

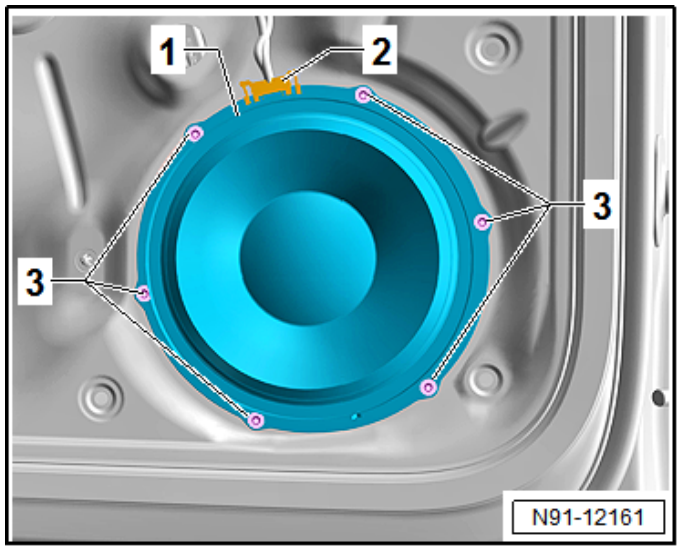

Reinstall door speaker:

- Installation is the reverse order of removal.
- Secure the pop rivets with the Pop Rivet Nut Pliers -VAS5072A- (or equivalent).

Part Number	Part Description
WHT-005-353	Pop-rivet (x6)

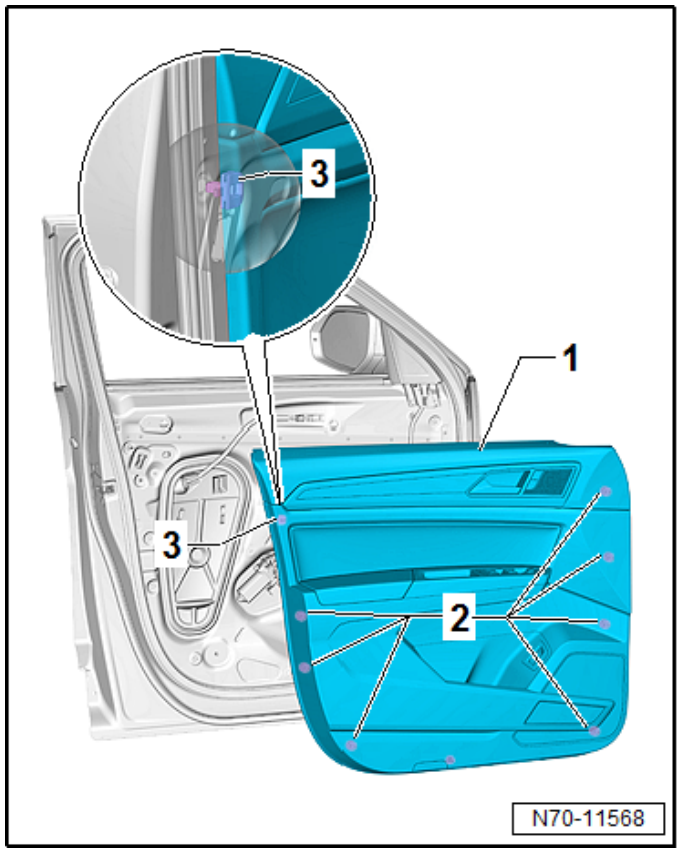

Reinstall door trim panel:

- Installation is the reverse order of removal.

Set window one-touch feature and clear repair related faults:

- Set window one-touch feature.
- Connect ODIS and restore saved ODIS session.
- Clear faults related to having the door harness disconnected.

If the opposite side door harness had no faults, it must be modified.

Proceed to Section D for modification of both body side door harnesses.

The repair information in this document is intended for use only by skilled technicians who have the proper tools, equipment and training to correctly and safely maintain your vehicle. These procedures are not intended to be attempted by “do-it-yourselfers,” and you should not assume this document applies to your vehicle, or that your vehicle has the condition described. To determine whether this information applies, contact an authorized Volkswagen dealer. ©2022 Volkswagen Group of America, Inc. and Volkswagen Canada. All Rights Reserved.

Section D – Modifying Door Wiring Harness (body side)

NOTE

If a door harness was replaced, the corresponding body side harness must still have grease applied to it.

Replacement door harnesses will have a tie wrap already installed. There is no need to replace an existing door harness tie wrap.

If NO fault were stored for both front door harnesses, both front body side door harnesses must be modified.

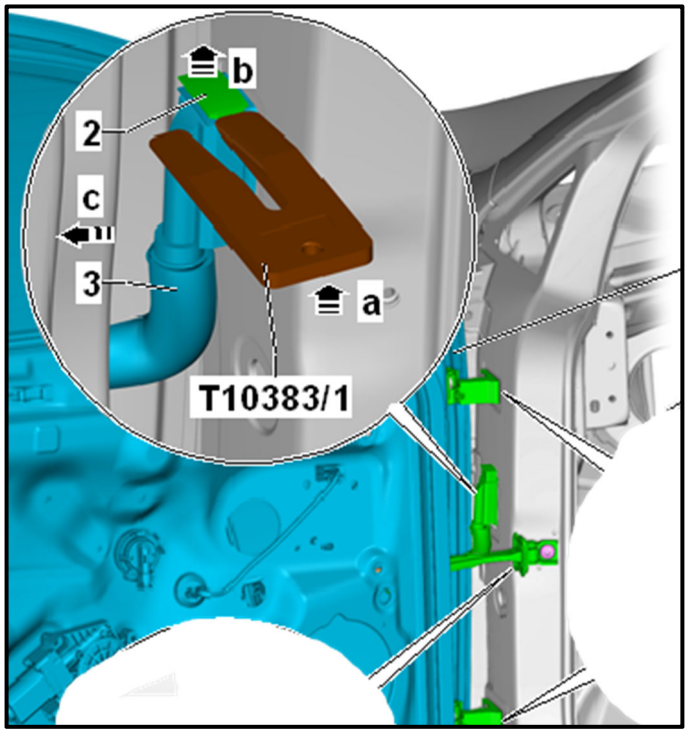

Disconnect connector:

NOTE

The procedure for the driver side front door harness is described. The procedure for the front passenger side is similar.

- Pull connector lock <2> upward in direction of <arrow b>.
- Using Wedge -T10383- may assist in releasing the connector lock.
- Pull the harness <3> out from the A-pillar in direction of <arrow c>.

The repair information in this document is intended for use only by skilled technicians who have the proper tools, equipment and training to correctly and safely maintain your vehicle. These procedures are not intended to be attempted by “do-it-yourselfers,” and you should not assume this document applies to your vehicle, or that your vehicle has the condition described. To determine whether this information applies, contact an authorized Volkswagen dealer. ©2022 Volkswagen Group of America, Inc. and Volkswagen Canada. All Rights Reserved.

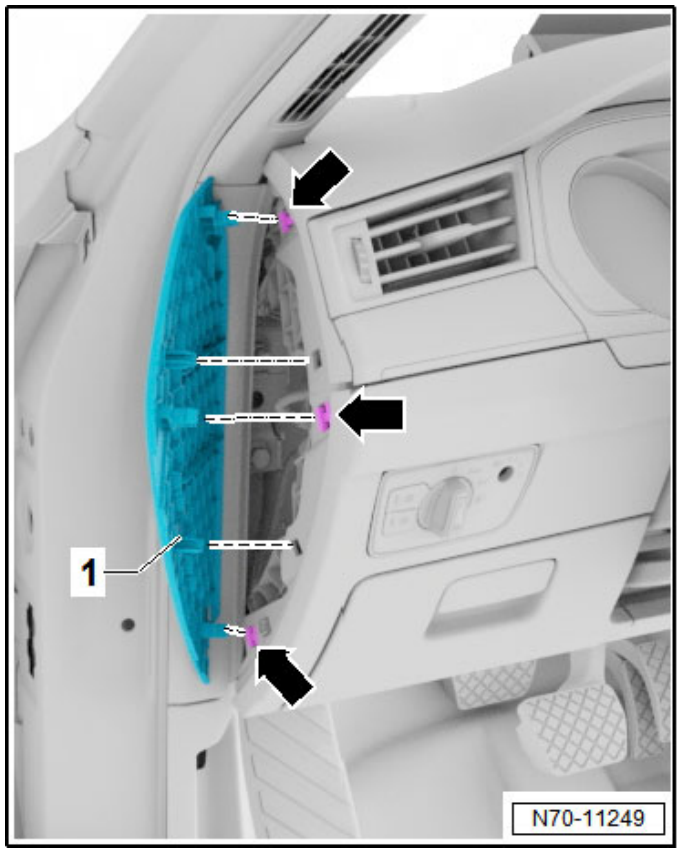

Remove instrument panel side cover:

- Loosen the instrument panel side cover <1> with the Trim Removal Wedge - 3409- near the catches <arrows>.
- Remove the cover rearward from the A-pillar gap cover.

Remove A-pillar gap cover:

- Unclip the A-pillar gap cover <1> from the A-pillar upper trim panel and A-pillar lower trim panel <arrows>.
- Loosen and remove the A-pillar gap cover <1> from the door seal molding.

The repair information in this document is intended for use only by skilled technicians who have the proper tools, equipment and training to correctly and safely maintain your vehicle. These procedures are not intended to be attempted by “do-it-yourselfers,” and you should not assume this document applies to your vehicle, or that your vehicle has the condition described. To determine whether this information applies, contact an authorized Volkswagen dealer. ©2022 Volkswagen Group of America, Inc. and Volkswagen Canada. All Rights Reserved.

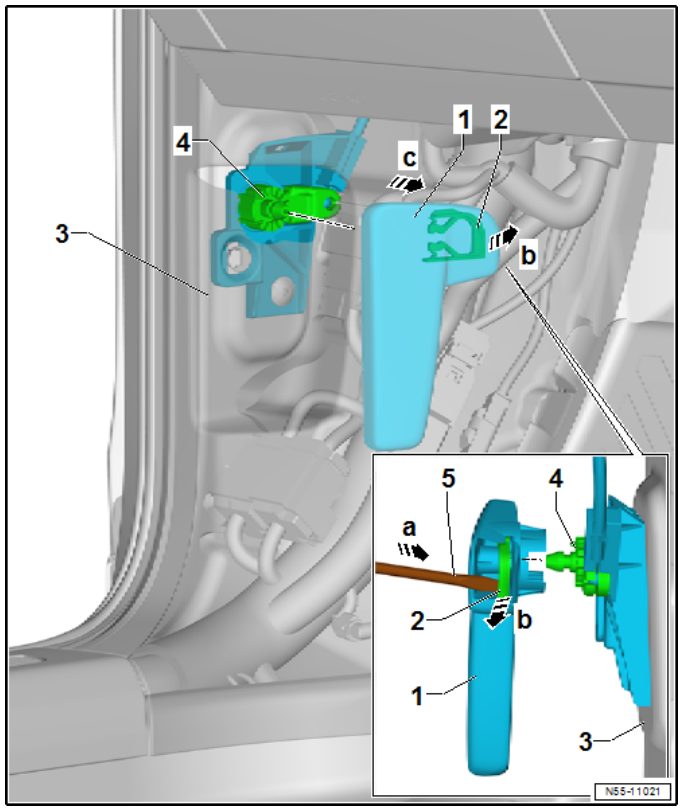

Remove hood latch release (if replacing driver door harness):

- Pull the release lever <1> and release the hood.
- Pull the operating lever <1> until it stops and hold it in this position.
- Insert a small screwdriver <5> into the gap between the operating lever <1> and the clip <2> <arrow a>.
- Pry the clip <2> out of the operating lever <1> in the <direction of arrow b>. Then remove the operating lever from the mounting bracket <4> in the <direction of arrow c>.

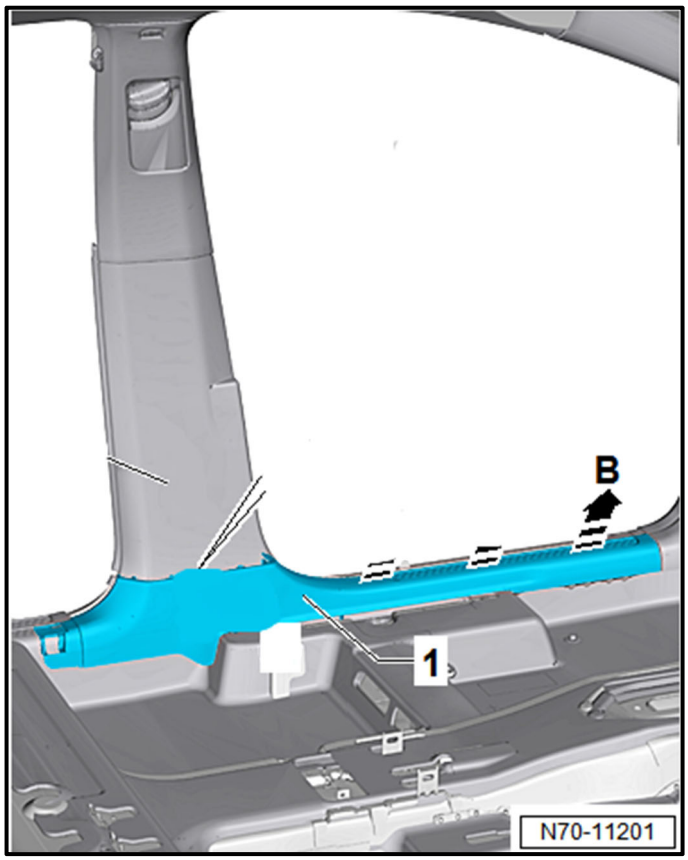

Detach front portion of sill panel:

- Release the front sill panel strip <1> using the Wedge Set -T10383- in <direction of arrow B>.

The repair information in this document is intended for use only by skilled technicians who have the proper tools, equipment and training to correctly and safely maintain your vehicle. These procedures are not intended to be attempted by “do-it-yourselfers,” and you should not assume this document applies to your vehicle, or that your vehicle has the condition described. To determine whether this information applies, contact an authorized Volkswagen dealer. ©2022 Volkswagen Group of America, Inc. and Volkswagen Canada. All Rights Reserved.

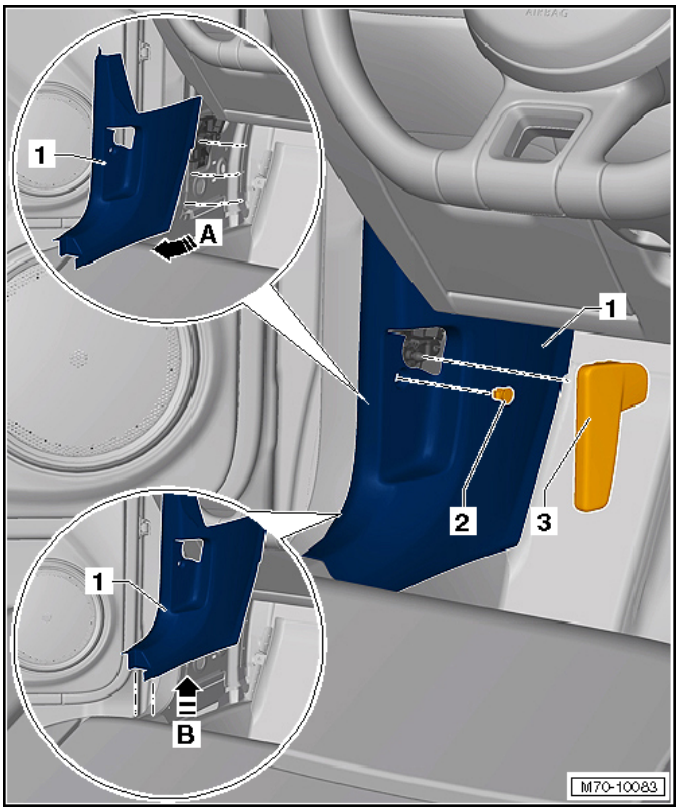

Remove lower A-pillar trim panel:

- Remove the clip <2>.
- Loosen the lower A-pillar trim panel <1> from the body in the <direction of arrow B>. Loosen the lower A-pillar trim panel from the door seal molding.
- Remove the lower A-pillar trim panel <1> from the mount <direction of arrow A>.

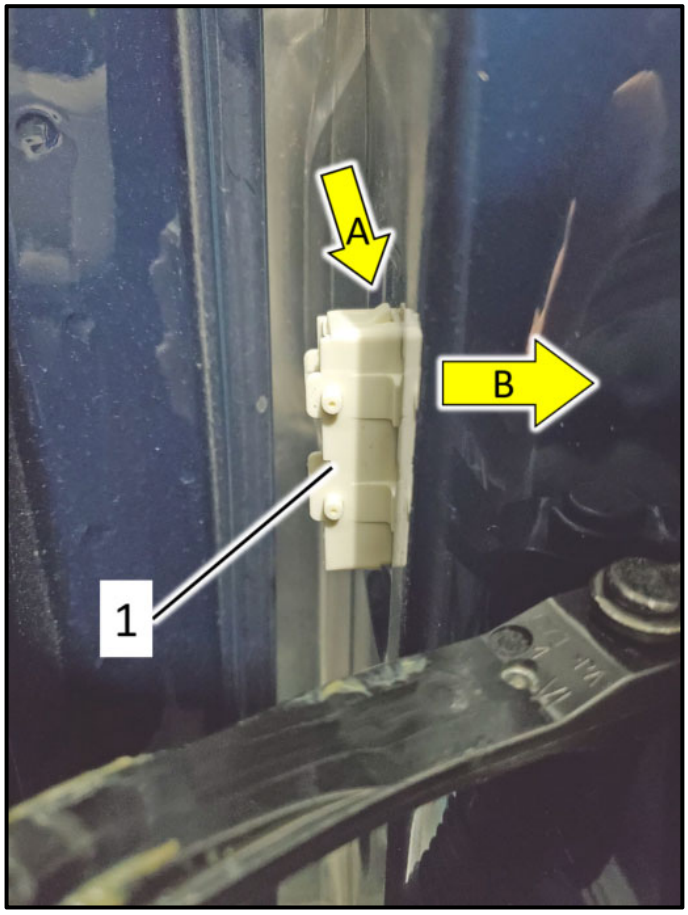

Remove body side connector:

- Press down on locking tab <arrow A>.
- Press connector <1> into body in <direction of arrow B>.
- Pull body side door wiring harness out of the A-pillar.

The repair information in this document is intended for use only by skilled technicians who have the proper tools, equipment and training to correctly and safely maintain your vehicle. These procedures are not intended to be attempted by "do-it-yourselfers," and you should not assume this document applies to your vehicle, or that your vehicle has the condition described. To determine whether this information applies, contact an authorized Volkswagen dealer. ©2022 Volkswagen Group of America, Inc. and Volkswagen Canada. All Rights Reserved.

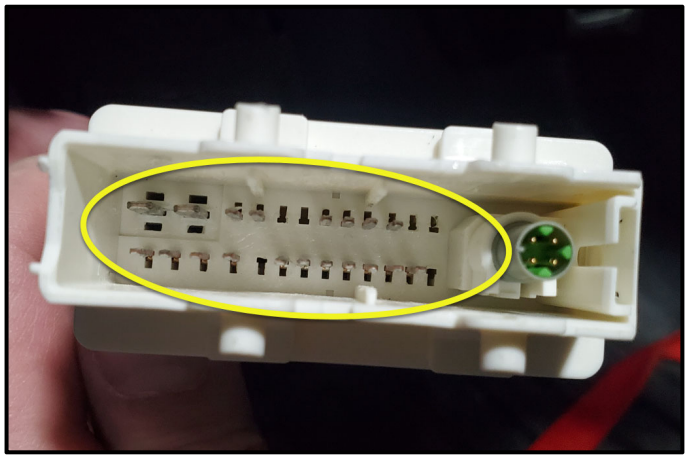

Apply lithium grease to male connector pins:

Part Number	Part Description
G -055-150-A1	Lithium grease (shop supply)

- A small amount (as shown) should be enough to coat all of the terminals on one harness.
- Using a clean, small brush, apply lithium grease to the male connector pins.
- Ensure both sides of each terminal are covered.
- There is no need to apply grease to the coaxial connection (if equipped).

NOTE

Use only the lithium grease specified. Alternative grease part numbers or locally sourced lithium grease must NOT be used.

The repair information in this document is intended for use only by skilled technicians who have the proper tools, equipment and training to correctly and safely maintain your vehicle. These procedures are not intended to be attempted by "do-it-yourselfers," and you should not assume this document applies to your vehicle, or that your vehicle has the condition described. To determine whether this information applies, contact an authorized Volkswagen dealer. ©2022 Volkswagen Group of America, Inc. and Volkswagen Canada. All Rights Reserved.

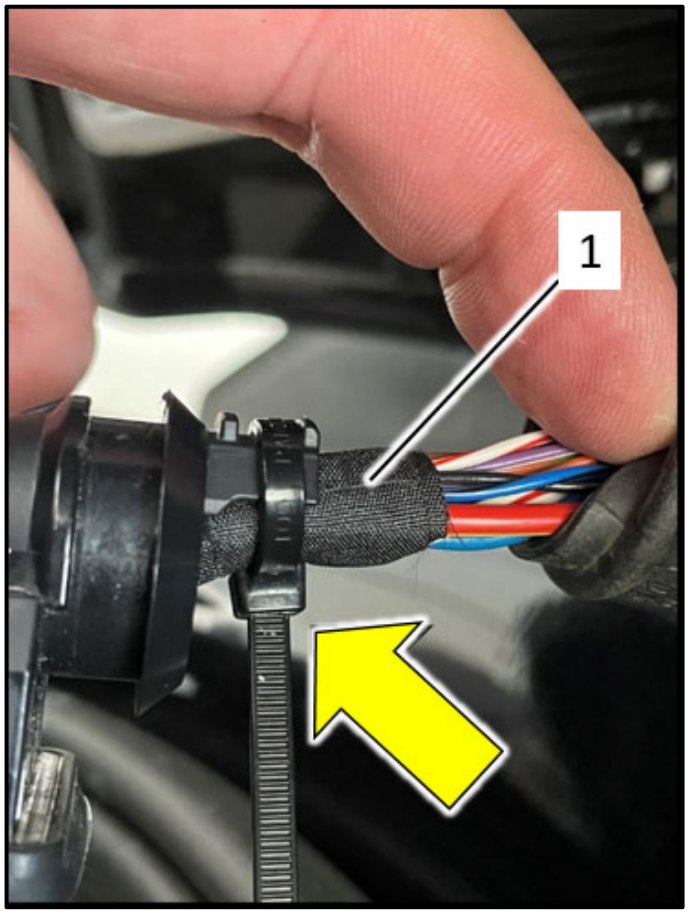

Install tie wrap on door side wiring harness:

NOTE

There is no need to replace an existing door harness tie wrap.

- Pull back protective boot from connector housing using a trim tool.

CAUTION

Risk of damaging wiring

Do not use any sharp tools when pulling back protective boot. Damage to the boot or wiring could occur.

- Apply cloth electrical tape <1> (shop supply) around the wires as shown.
- Install new tie wrap <arrow> as shown and cut off excess material.

Part Number	Part Description
N -106-622-01	Tie Wrap

- Reinstall boot onto the connector housing in the reverse order of removal so it is fully seated onto the connector housing.

The repair information in this document is intended for use only by skilled technicians who have the proper tools, equipment and training to correctly and safely maintain your vehicle. These procedures are not intended to be attempted by “do-it-yourselfers,” and you should not assume this document applies to your vehicle, or that your vehicle has the condition described. To determine whether this information applies, contact an authorized Volkswagen dealer. ©2022 Volkswagen Group of America, Inc. and Volkswagen Canada. All Rights Reserved.

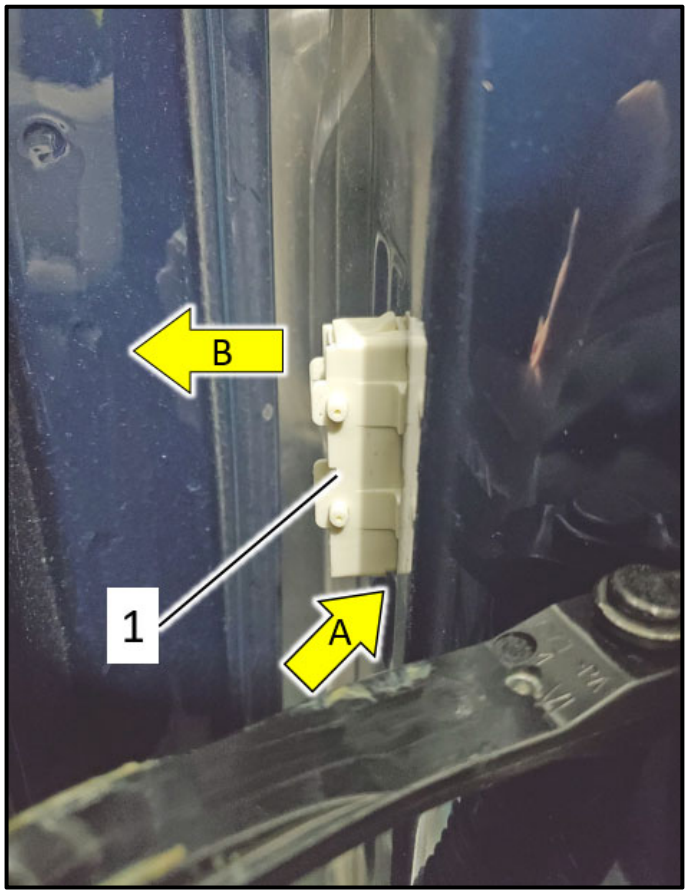

Reinstall door harness into body and reconnect connector:

- Install connector housing <1> in the reverse order of removal.
- Engage the bottom of the connector <arrow A> first.
- Then engage the top of the connector in <direction of arrow B> until the locking tab is engaged.

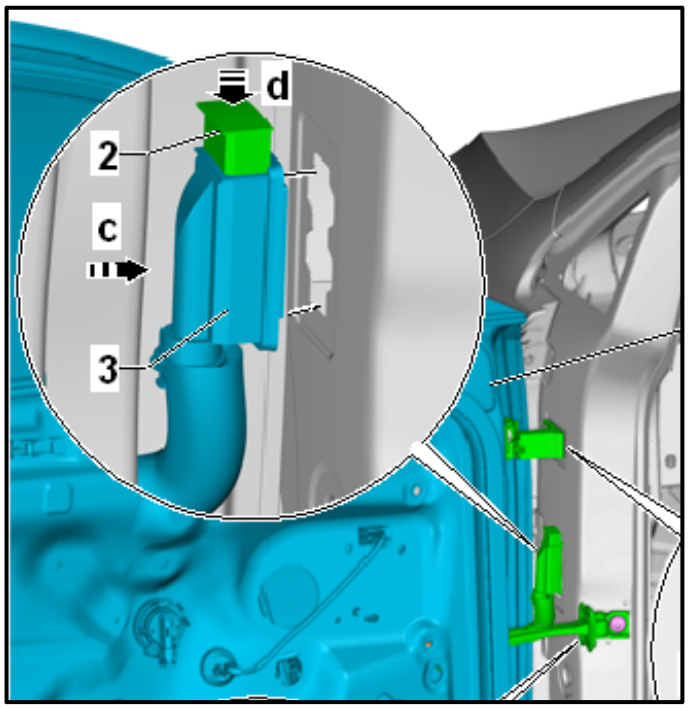

- Reconnect door harness connector <3> in direction of <arrow c>.
- Press connector lock <2> down in direction of <arrow d>.

The repair information in this document is intended for use only by skilled technicians who have the proper tools, equipment and training to correctly and safely maintain your vehicle. These procedures are not intended to be attempted by “do-it-yourselfers,” and you should not assume this document applies to your vehicle, or that your vehicle has the condition described. To determine whether this information applies, contact an authorized Volkswagen dealer. ©2022 Volkswagen Group of America, Inc. and Volkswagen Canada. All Rights Reserved.

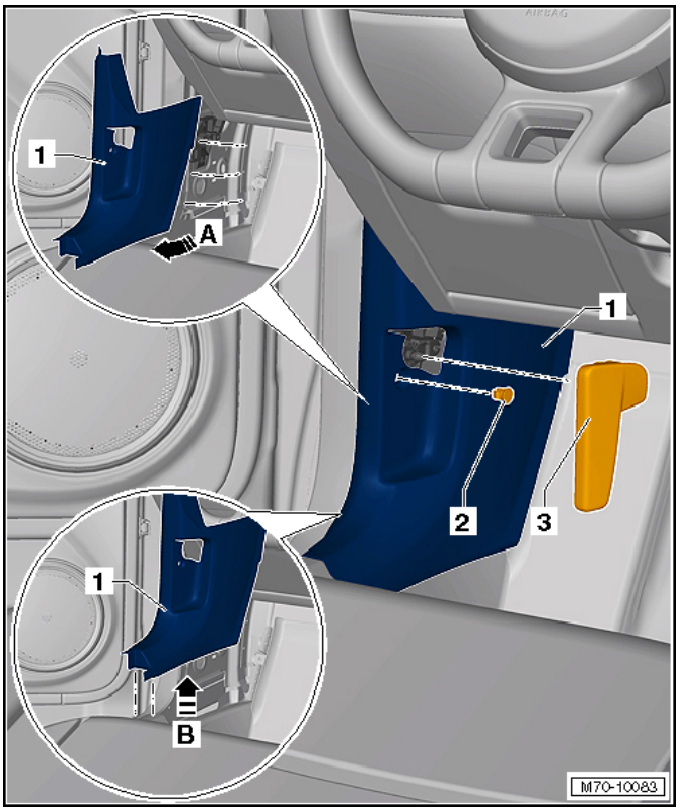

Reinstall all removed trim panels:

- Installation is the reverse order of removal.
  - A-pillar lower trim panel
  - Hood release (for driver side)
  - Sill panel trim
  - A-pillar gap cover
  - Instrument panel side cover
- Remove any clips left in the body using Omega Clip Tool -T40280-.

Set window one-touch feature and clear repair related faults:

- Set window one-touch feature.
- Connect ODIS and restore saved ODIS session.
- Clear faults related to having the door harness disconnected.

Proceed to Section E

Section E – Campaign Completion Label

Install Campaign Completion Label

- Fill out and affix Campaign Completion Label, part number CAMP 010 000, next to the vehicle emission control information label.

TIP
Ensure Campaign Completion Label does not cover any existing label(s).

Proceed to Section F

Section F - Parts Return/Disposal

Properly store (retain), destroy or dispose of removed parts in accordance with all state/province and local requirements, unless otherwise indicated and/or requested through the Warranty Parts Portal (WPP) for U.S. and the Part Destruction and Core Disposition Report for Canada.

The repair information in this document is intended for use only by skilled technicians who have the proper tools, equipment and training to correctly and safely maintain your vehicle. These procedures are not intended to be attempted by “do-it-yourselfers,” and you should not assume this document applies to your vehicle, or that your vehicle has the condition described. To determine whether this information applies, contact an authorized Volkswagen dealer. ©2022 Volkswagen Group of America, Inc. and Volkswagen Canada. All Rights Reserved.